# TUTUCU KATALOĞU
# HOLDER CATALOGUE
# HALTER KATALOG

www.akko.com.tr

- *Değiştirilebilir Uçlu Takımlar, Takım Tutucu Sistemler ve Kesici Uçlar*
- *Indexable Tools, Tool Holder Systems and Cutting Inserts*
- *Zerspanungswerkzeuge, Werkzeugaufnahmen und Zerspanungswerkzeuge*

versiyon
version 0100/0825
auflage

***konuşulan** kalite...*
***the spoken** quality...*
***qualität über die man spricht...***

AKKO®

AKKO Metalworking Tools

TS EN ISO 9001:2015

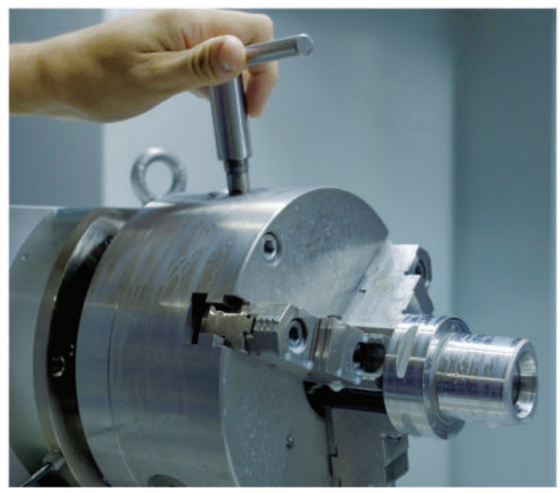

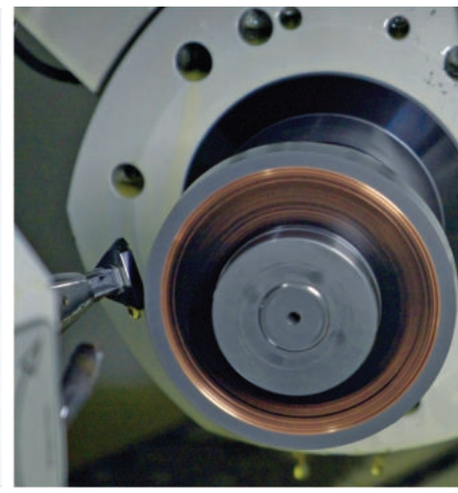

# konuşulan kalite • the spoken quality • qualität über die man spricht

1986 yılında Abdullah KARAKUŞ tarafından kurulan AKKO Makina Sanayi ve Ticaret A.Ş. Tornalama Takımları, Diş ve Kanal Açma Takımları, Delik Delme Takımları, Frezeleme Takımları ve talebe yönelik Özel Takımlar, Monoblok ve Tutucular ile Profil Uçlar üretmektedir. Şu an 40.000m²'ye yakın bir alanda Türkiye, Japonya, Almanya, İsviçre gibi ülkelerin ürettikleri son teknoloji tezgah ve ekipmanlarıyla yıllık 750.000 adet üretim kapasitesiyle, standart 10.000 çeşit takım üretimi ve 70.000 adet profil uç üretimi yapmaktadır. Avrupa, Asya, Afrika, Güney Amerika, Kuzey Amerika ve Orta Doğu kıtalarında şimdilik düzenli olarak 90 ülkeye ürün sevkiyatına devam etmektedir. Minimum 300.000 adet üretilmiş ürün stoklarında mevcut bulunmaktadır. Firma için özel üretilen çelik hammadde işleme girer ve bütün üretim süreci kendi bünyesinde gerçekleşmektedir. Çeliğin işlenmesi, ısıl işlemi, üzerindeki kaplama ve her türlü üretim operasyonları bir entegre tesis olan AKKO'da yapılmaktadır.

We as AKKO Makina Sanayi ve Ticaret A.Ş. which were founded by Abdullah KARAKUŞ in 1986, produce Turning Tool Holders, Threading and Grooving Tool Holders, U-Drills, Milling Tool Holders, Precision Tool Holders (OEM Tool Holders) on-demand, Monoblocks and Holders, and Profile Inserts. We produce a standard 10.000 kinds of tool holders with a production capacity of 750.000 pieces and 70.000 pieces of special profile inserts per year in an area of about 40.000 square meters. We are going on regularly exporting to 90 countries including European, Asian, African, South American Countries, North American Countries, and Middle Eastern countries. We keep ready about 300.000 pieces produced products in our stock. Steel Raw materials that we make produced especially for us are delivered our factory and all production process are made in our factory. All kinds of operations from machining of steel to heat treatment and coating on our tools are made in our integrated factory AKKO.

Wir die Firma AKKO Makina Sanayi ve Ticaret A.Ş. welches durch Herrn Abdullah Karakuş in 1986 gegründet wurde, produzieren Dreh-, Gewinde- und Stechwerkzeuge für Wendeschneidplatten. Zum Lieferprogramm gehören außerdem Wendeplattenbohrer, Wendeplattenfräser, Halter und auf Anfrage auch Sonderwerkzeuge für Wendeschneidplatten. Alle Werkzeuge sind auch als OEM-Version lieferbar. Wir produzieren 10.000 Standard Arten der Werkzeughalter mit einer Produktionskapazität von 750.000 Stücken und 70.000 Stück Spezialprofileinlagen per anum auf einer Fläche von 40.000 Quadrat Meter. Wir exportieren unsere eigenproduzierten Ware nach 90 Ländern, Europa, Asien, Afrika, Süd amerikanische Länder, Mittlerer Osten. Lieferbereit halten wir 300.000 Stück produzierte Produkte auf Lager. Das eingesetzte Rohmaterial wird speziell für unsere Firma produziert. Alle Produktionsschritte werden auf unseren eigenen Anlagen veranlasst. Alle einzelnen Produktionsschritte wie z.B. mechanische Bearbeitung, Wärmebehandlung und Beschichtung unserer Werkzeuge erfolgen auf unseren eigenen Maschinenanlagen.

# İÇİNDEKİLER • CONTENTS • INHALTSVERZEICHNIS

## BT


**BT TUTUCULAR KODLAMA SİSTEMİ**
***BT HOLDER DESIGNATION SYSTEM***
*BT HALTER BEZEICHNUNGS SYSTEM*

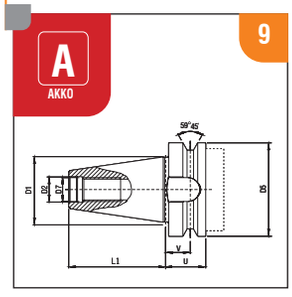


**BT VELDON ŞAFTLI TAKIM TUTUCULAR**
***BT END MILL HOLDER***
*BT FRÄSERAUFNAHMEN*

**BT ER SIKMA PENSLİ TAKIM TUTUCULAR**
***BT COLLET CHUCKS ER***
*BT HALTER BT SPANNFUTTER ER*

**BT ER MİNİ SIKMA PENSLİ TAKIM TUTUCULAR**
***BT COLLET CHUCKS ER MINI***
*BT SPANNFUTTER ER MINI*

**BT YÜZEY FREZE TAKIM TUTUCULAR**
***BT SHELL MILL HOLDER***
*BT QUERNUT-AUFSTECKDORN*

**BT MODÜLER PARMAK FREZE TUTUCULAR**
***BT MILLING CUTTER ARBORS FOR SCREW-ON TYPE MILLING CUTTERS***
*BT MODULARE SCHAFTFRÄSERHALTER*

**BT KOMBİNE YÜZEY FREZE TUTUCULAR**
***BT COMBI SHELL MILL HOLDER***
*BT KOMBINIERTE FLÄCHENFRÄSHALTER*

**BT BLANK TUTUCULAR**
***BT BLANK HOLDERS***
*BT BLANK HALTER*

## AK-PLUS


**AK-PLUS TUTUCULAR KODLAMA SİSTEMİ**
***AK-PLUS HOLDER DESIGNATION SYSTEM***
*AK-PLUS HALTER BEZEICHNUNGS SYSTEM*

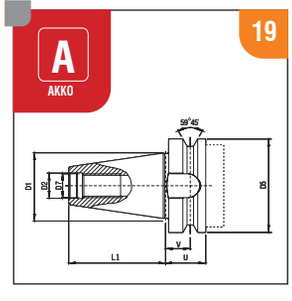


**AK-PLUS VELDON ŞAFTLI TAKIM TUTUCULAR**
***AK-PLUS END MILL HOLDER***
*AK-PLUS FRÄSERAUFNAHMEN*

**AK-PLUS ER SIKMA PENSLİ TAKIM TUTUCULAR**
***AK-PLUS COLLET CHUCKS ER***
*AK-PLUS SPANNFUTTER ER*

**AK-PLUS ER MİNİ SIKMA PENSLİ TAKIM TUTUCULAR**
***AK-PLUS COLLET CHUCKS ER MINI***
*AK-PLUS SPANNFUTTER ER MINI*

**AK-PLUS YÜZEY FREZE TAKIM TUTUCULAR**
***AK-PLUS SHELL MILL HOLDER***
*AK-PLUS QUERNUT-AUFSTECKDORN*

**AK-PLUS MODÜLER PARMAK FREZE TUTUCULAR**
***AK-PLUS MILLING CUTTER ARBORS FOR SCREW-ON TYPE MILLING CUTTERS***
*AK-PLUS MODULARE SCHAFTFRÄSERHALTER*

**AK-PLUS KOMBİNE YÜZEY FREZE TUTUCULAR**
***AK-PLUS COMBI SHELL MILL HOLDER***
*AK-PLUS KOMBINIERTE FLÄCHENFRÄSHALTER*

SK


**SK TUTUCULAR KODLAMA SİSTEMİ**
***SK HOLDER DESIGNATION SYSTEM***
*SK HALTER BEZEICHNUNGS SYSTEM*

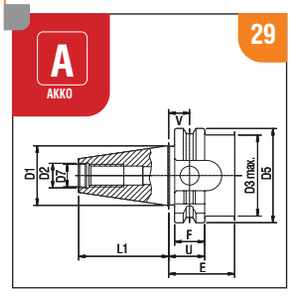

29

**SK VELDON ŞAFTLI TAKIM TUTUCULAR**
***SK END MILL HOLDER***
*SK FRÄSERAUFNAHMEN*

30
DIN ISO 7388-1 (SK DIN 69871)

**SK ER SIKMA PENSLİ TAKIM TUTUCULAR**
***SK COLLET CHUCKS ER***
*SK SPANNFUTTER ER*

31
DIN ISO 7388-1 (SK DIN 69871)

**SK YÜZEY FREZE TAKIM TUTUCULAR**
***SK SHELL MILL HOLDER***
*SK AUFSTECKFRÄSERDORNE*

31
DIN ISO 7388-1 (SK DIN 69871)



Yenilikler için bizi takip edin!
***Follow us for news!***
*Für Neuheiten bitte uns folgen*

AKKO Metalworking Tools

HSK


**HSK TUTUCULAR KODLAMA SİSTEMİ**
***HSK HOLDER DESIGNATION SYSTEM***
*HSK HALTER BEZEICHNUNGS SYSTEM*

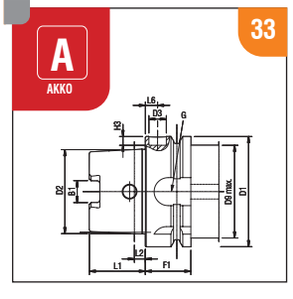

33

**HSK VELDON ŞAFTLI TAKIM TUTUCULAR**
***HSK END MILL HOLDER***
*HSK FRÄSERAUFNAHMEN*

34
ISO 12164-1

**HSK ER SIKMA PENSLİ TAKIM TUTUCULAR**
***HSK COLLET CHUCKS ER***
*HSK SPANNFUTTER ER*

36
ISO 12164-1

**HSK ER MİNİ SIKMA PENSLİ TAKIM TUTUCULAR**
***HSK COLLET CHUCKS ER MINI***
*HSK SPANNFUTTER ER MINI*

37
ISO 12164-1

**HSK YÜZEY FREZE TAKIM TUTUCULAR**
***HSK SHELL MILL HOLDER***
*HSK AUFSTECKFRÄSERDORNE*

38
ISO 12164-1

**HSK MODÜLER PARMAK FREZE TUTUCULAR**
***HSK MILLING CUTTER ARBORS FOR SCREW-ON TYPE MILLING CUTTERS***
*HSK MODULARE SCHAFTFRÄSERHALTER*

39
ISO 12164-1

**HSK KOMBİNE YÜZEY FREZE TUTUCULAR**
***HSK COMBI SHELL MILL HOLDER***
*HSK KOMBINIERTE FLÄCHENFRÄSHALTER*

40
ISO 12164-1

**HSK BLANK TUTUCULAR**
***HSK BLANK HOLDERS***
*HSK BLANK HALTER*

41

# İÇİNDEKİLER • CONTENTS • INHALTSVERZEICHNIS


**POLİGONAL ŞAFTLI TUTUCULAR KODLAMA SİSTEMİ**
***POLYGONAL SHANK HOLDER DESIGNATION SYSTEM***
*POLGYGONSCHAFT HALTER BEZEICHNUNGS SYSTEM*

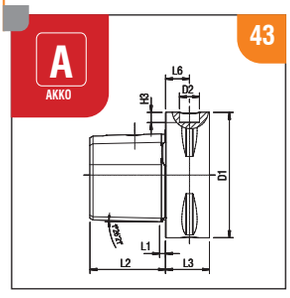

43

**POLİGONAL ŞAFTLI VELDON TAKIM TUTUCULAR**
***POLYGONAL SHANK END MILL HOLDER***
*POLGYGONSCHAFT HALTER*

44
ISO 26623-1

**POLİGONAL ŞAFTLI ER SIKMA PENSLİ TAKIM TUTUCULAR**
***POLYGONAL SHANK COLLET CHUCKS ER***
*POLGYGONSCHAFT HALTER SPANNFUTTER ER*

46
ISO 26623-1

**POLİGONAL ŞAFTLI ER MİNİ SIKMA PENSLİ TAKIM TUTUCULAR**
***POLYGONAL SHANK COLLET CHUCKS ER MINI***
*POLGYGONSCHAFT HALTER SPANNFUTTER ER MINI*

47
ISO 26623-1

**POLİGONAL ŞAFTLI YÜZEY FREZE TAKIM TUTUCULAR**
***POLYGONAL SHANK SHELL MILL HOLDER***
*POLGYGONSCHAFT HALTER AUFSTECKFRÄ SERDORNE*

48
ISO 26623-1

**POLİGONAL ŞAFTLI MODÜLER PARMAK FREZE TUTUCULAR**
***POLYGONAL SHANK MILLING CUTTER ARBORS FOR SCREW-ON TYPE MILLING CUTTERS***
*POLGYGONSCHAFT MODULARE SCHAFTFRÄSER HALTER*

49
ISO 26623-1

**POLİGONAL ŞAFTLI KOMBİNE YÜZEY FREZE TUTUCULAR**
***POLYGONAL SHANK COMBI SHELL MILL HOLDER***
*POLGYGONSCHAFT HALTER KOMBINIERTE FLÄCHENFRÄS*

50
ISO 26623-1

**POLİGONAL ŞAFTLI DİKDÖRTGEN SAPLI KATER TUTUCULAR**
***POLYGONAL SHANK TOOLHOLDER AXIAL***
*POLYGON SHANKWERKZEUG-HALTER AXIAL*

51
ISO 26623-1

**POLİGONAL ŞAFTLI UZATMA ADAPTÖR TUTUCULAR**
***POLYGONAL SHANK EXTENSION***
*POLGYGONSCHAFT HALTER SCHRUMPFVERLÄNGERUNGEN*

52
ISO 26623-1

**POLİGONAL ŞAFTLI BLANK TUTUCULAR**
***POLYGONAL SHANK BLANK HOLDERS***
*POLGYGONSCHAFT BLANK HALTER*

53

**MINI CUT TUTUCULAR**
***MINI CUT HOLDERS***
*MINI CUT HALTER*

54

**VİDALI TAKIM TUTUCULARI**
***SCREWED TOOL HOLDERS***
*AUFNAHME FÜR EINSCHRAUBFRÄSER*

56

**DÖNER BROŞ AÇMA TAKIMLARI**
***ROTARY BROACH TOOL HOLDER***
*HALTER FÜR ROTATIONSRÄUMWERKZEUGE*

56

**YEDEK PARÇALAR**
***SPARE PARTS***
*ERSATZTEILE*

57

# THE SPOKEN QUALITY

www.akko.com.tr

**BİLGİLENDİRME**
***THE INFORMATION***
*INFORMIEREN*

- Teknik çizim ve fotoğraflar değişkenlik gösterebilir.
  Illustrations shown may vary from actual product.
  *Das Produkt kann von dem gezeigten Bild abweichen.*

AKKO®

# BT TUTUCULAR

## *BT HOLDERS*
## *BT HALTER*

Teknik çizim ve fotoğraflar değişkenlik gösterebilir.
Illustrations shown may vary from actual product.
*Das Produkt kann von dem gezeigten Bild abweichen.*

AKKO®

konuşulan
the spoken kalite...
quality...

www.akko.com.tr

| 1 | 2 | 3 | 4 | 5 |
|---|---|---|---|---|
| A | BT40 | EM | 06 | 080 |
| AKKO | GÖVDE TİPİ / SHANK TYPE / KÖRPERTYP | FORMU / FORM / FORM | ÇAP / DIAMETER / DURCHMESSER | TUTUCU BOY / HOLDER SIZE / HALTER GRÖSSE |

**BT** 30-40-50

**EM : VELDON ŞAFTLI TAKIM TUTUCULAR** / END MILL HOLDER / *FRÄSERAUFNAHMEN*
**ER : ER SIKMA PENSLİ TAKIM TUTUCULAR** / COLLET CHUCKS (ER) / *SPANNFUTTER ER*
**FM : YÜZEY FREZE TAKIM TUTUCULAR** / SHELL MILL HOLDERS / *AUFSTECKFRÄSERDORNE*
**MM : MODÜLER PARMAK FREZE TUTUCULAR** / MILLING CUTTER ARBORS FOR SCREW-ON TYPE MILLING CUTTERS / *MODULARE SCHAFTFRÄSERHALTER*
**FMC : KOMBİNE YÜZEY FREZE TAKIM TUTUCULARI** / COMBI SHELL MILL HOLDER / *KOMBINIERTE FLÄCHENFRÄSHALTER*
**BL41: BLANK TUTUCULAR** / BLANK HOLDERS / *BLANK HALTER*

## KALİTE KONTROL
## QUALITY CONTROL
## QUALITÄTSKONTROLLE

**BT 40** **BT** 30-40-50

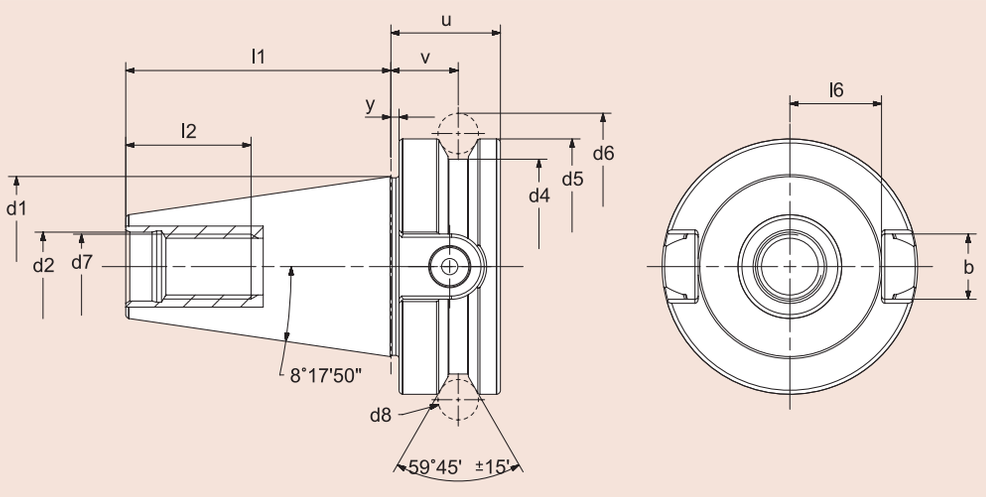


***Tasarım:***
*– Konik açısı: 8° 17'50"+ 4"*
*– Takım tutucular, yüzeyi sertleştirilmiş 58 ± 2 HRC*
*– Çekirdekte çekme dayanımı en az 950 N/mm2*
*– AT3 tolerans kalitesinde koniklik*
*– Dahili veri çipi için çap Ø 10 mm*

***Design:***
*– Angle of cone: 8° 17'50"+ 4"*
*– Tool holders case-hardened 58 ± 2 HRC*
*– Tensile strength in the core at least 950 N/mm2*
*– Taper in tolerance quality AT3*
*– Incl. bore for data chip Ø 10 mm*

***Ausführung:***
*– Kegelwinkel: 8° 17'50"+ 4"*
*– Aufnahmen einsatzgehärtet 58 ± 2 HRC*
*– Zugfestigkeit im Kern mindestens 950 N/mm2*
*– Steilkegel in Kegelwinkel-Toleranzqualität AT3*
*– Inkl. Codeträgerbohrung Ø 10 mm*

| BT | d1 | d2 H8 | d4 0.0 -0.05 | d5 h8 | d6 ±0.05 | d7 6H | d8 | u min. | v ±0.1 | y ±0.4 | l1 ±0.1 | l2 min. | l6 0.0 -0.2 | b 0.2 0.0 |
|---|---|---|---|---|---|---|---|---|---|---|---|---|---|---|
| 30 | 31.75 | 12.5 | 38 | 46 | 56.144 | M12x1.75 | 8 | 22 | 13.6 | 2 | 48.4 | 24 | 16.3 | 16.1 |
| 40 | 44.45 | 17 | 53 | 63 | 75.679 | M16x2 | 10 | 27 | 16.6 | 2 | 65.4 | 30 | 22.6 | 16.1 |
| 50 | 69.85 | 25 | 85 | 100 | 119.020 | M24x3 | 15 | 38 | 23.2 | 3 | 101.8 | 45 | 35.4 | 25.7 |

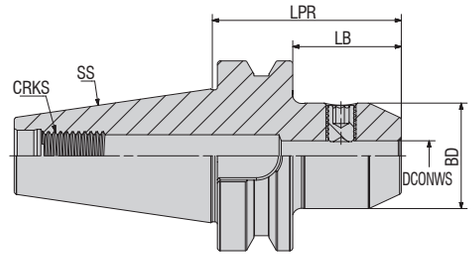


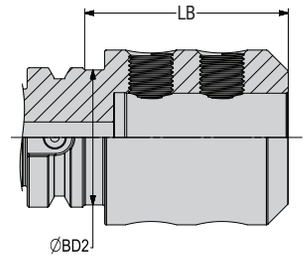


FORM AD | DIN 1835-B | JIS B 6339 (MAS403BT) | HRC 58±2 | H5 | G 2.5 25.000 min-1 U ≤ 1 gmm | CHIP | 0.003

| Sipariş Kodu *Ordering Code* *Bestell-Bezeichnung* | Stok *Stock* *Lager* | Tutucu Ölçüleri (mm) *Dimension (mm)* *Abmessung (mm)* | | | | | | | |
|---|---|---|---|---|---|---|---|---|---|
| | | SS | DCONWS | LPR | BD | BD2 | LB | CRKS | KG |
| ABT30-EM-06-050 | ● | 30 | 06 | 50 | 25 | - | 28 | M12 | 0.46 |
| ABT30-EM-08-050 | ● | 30 | 08 | 50 | 28 | - | 28 | M12 | 0.49 |
| ABT30-EM-10-050 | ● | 30 | 10 | 50 | 35 | - | 28 | M12 | 0.54 |
| ABT30-EM-12-050 | ● | 30 | 12 | 50 | 42 | - | 28 | M12 | 0.6 |
| ABT30-EM-14-050 | ● | 30 | 14 | 50 | 44 | - | 28 | M12 | 0.61 |
| ABT30-EM-16-065 | ● | 30 | 16 | 65 | 48 | - | 43 | M12 | 0.9 |
| ABT30-EM-18-065 | ● | 30 | 18 | 65 | 50 | 45 | 43 | M12 | 0.88 |
| ABT40-EM-06-050 | ● | 40 | 06 | 50 | 25 | - | 23 | M16 | 1.03 |
| ABT40-EM-06-100 | ● | 40 | 06 | 100 | 25 | - | 73 | M16 | 1.2 |
| ABT40-EM-06-160 | ● | 40 | 06 | 160 | 25 | - | 133 | M16 | 1.44 |
| ABT40-EM-08-050 | ● | 40 | 08 | 50 | 28 | - | 23 | M16 | 1.05 |
| ABT40-EM-08-100 | ● | 40 | 08 | 100 | 28 | - | 73 | M16 | 1.27 |
| ABT40-EM-08-160 | ● | 40 | 08 | 160 | 28 | - | 133 | M16 | 1.57 |
| ABT40-EM-10-063 | ● | 40 | 10 | 63 | 35 | - | 36 | M16 | 1.17 |
| ABT40-EM-10-100 | ● | 40 | 10 | 100 | 35 | - | 73 | M16 | 1.41 |
| ABT40-EM-10-160 | ● | 40 | 10 | 160 | 35 | - | 133 | M16 | 1.86 |
| ABT40-EM-12-063 | ● | 40 | 12 | 63 | 42 | - | 36 | M16 | 1.26 |
| ABT40-EM-12-100 | ● | 40 | 12 | 100 | 42 | - | 73 | M16 | 1.62 |
| ABT40-EM-12-160 | ● | 40 | 12 | 160 | 42 | - | 133 | M16 | 2.28 |
| ABT40-EM-14-063 | ● | 40 | 14 | 63 | 44 | - | 36 | M16 | 1.3 |
| ABT40-EM-14-100 | ● | 40 | 14 | 100 | 44 | - | 73 | M16 | 1.68 |
| ABT40-EM-14-160 | ● | 40 | 14 | 160 | 44 | - | 133 | M16 | 2.4 |
| ABT40-EM-16-063 | ● | 40 | 16 | 63 | 48 | - | 36 | M16 | 1.33 |
| ABT40-EM-16-100 | ● | 40 | 16 | 100 | 48 | - | 73 | M16 | 1.82 |
| ABT40-EM-16-160 | ● | 40 | 16 | 160 | 48 | - | 133 | M16 | 2.68 |
| ABT40-EM-18-065 | ● | 40 | 18 | 65 | 50 | - | 38 | M16 | 1.38 |
| ABT40-EM-18-100 | ● | 40 | 18 | 100 | 50 | - | 73 | M16 | 1.88 |
| ABT40-EM-18-160 | ● | 40 | 18 | 160 | 50 | - | 133 | M16 | 2.61 |
| ABT40-EM-20-063 | ● | 40 | 20 | 63 | 52 | - | 36 | M16 | 1.65 |
| ABT40-EM-20-100 | ● | 40 | 20 | 100 | 52 | - | 73 | M16 | 1.94 |
| ABT40-EM-20-160 | ● | 40 | 20 | 160 | 52 | - | 133 | M16 | 2.95 |
| ABT40-EM-25-090 | ● | 40 | 25 | 90 | 63 | 61 | 63 | M16 | 2.11 |
| ABT40-EM-25-130 | ● | 40 | 25 | 130 | 63 | 61 | 103 | M16 | 3.06 |
| ABT40-EM-25-160 | ● | 40 | 25 | 160 | 63 | 61 | 133 | M16 | 3.76 |
| ABT40-EM-32-100 | ● | 40 | 32 | 100 | 72 | 61 | 73 | M16 | 2.64 |
| ABT40-EM-32-130 | ● | 40 | 32 | 130 | 72 | 61 | 103 | M16 | 3.56 |
| ABT40-EM-32-160 | ● | 40 | 32 | 160 | 72 | 61 | 133 | M16 | 4.48 |
| ABT40-EM-40-120 | ● | 40 | 40 | 120 | 79 | 61 | 93 | M16 | 3.48 |

**Yedek Parça** / *Spare Part* / *Ersatzteile*

*Veldon Sıkma Civatası DIN 1835 B*
*Clamping Screw Weldon DIN 1835 B*
*Weldon-Klemmschraube DIN 1835 B*

*Çektirme Civatası*
*Pull Stud*
*Anzugsbolzen*

Sipariş Örneği/Ordering Example/*Bestellbeispiel*
1 ad./pcs./stück ABT30-EM-06-050

● *Stokta / In Stock / Auf Lager* ○ *Stokta Yok / Non Stock Item / Kein Lagerartikel, Lieferzeit auf Anfrage*

*Daha fazla bilgi için, 56-71. sayfalara bakabilirsiniz. / For more info, you can check pages between 56-71. / Weitere Informationen finden Sie auf den Seiten 56–71.*

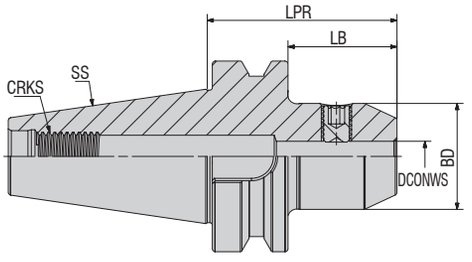


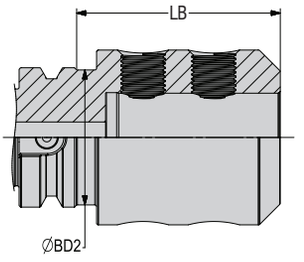


FORM AD | DIN 1835-B | JIS B 6339 (MAS403BT) | HRC 58±2 | H5 | G 2.5 25.000 min-1 U ≤ 1 gmm | CHIP | 0.003

| Sipariş Kodu *Ordering Code* *Bestell-Bezeichnung* | Stok *Stock* *Lager* | Tutucu Ölçüleri (mm) *Dimension (mm)* *Abmessung (mm)* | | | | | | | |
|---|---|---|---|---|---|---|---|---|---|
| | | SS | DCONWS | LPR | BD | BD2 | LB | CRKS | KG |
| ABT50-EM-06-070 | ● | 50 | 06 | 70 | 25 | - | 32 | M24 | 3.68 |
| ABT50-EM-06-100 | ● | 50 | 06 | 100 | 25 | - | 62 | M24 | 3.83 |
| ABT50-EM-06-160 | ● | 50 | 06 | 160 | 25 | - | 122 | M24 | 4.05 |
| ABT50-EM-08-070 | ● | 50 | 08 | 70 | 28 | - | 32 | M24 | 3.58 |
| ABT50-EM-08-100 | ● | 50 | 08 | 100 | 28 | - | 62 | M24 | 3.88 |
| ABT50-EM-08-160 | ● | 50 | 08 | 160 | 28 | - | 122 | M24 | 4.17 |
| ABT50-EM-10-070 | ● | 50 | 10 | 70 | 35 | - | 32 | M24 | 3.68 |
| ABT50-EM-10-100 | ● | 50 | 10 | 100 | 35 | - | 62 | M24 | 3.99 |
| ABT50-EM-10-160 | ● | 50 | 10 | 160 | 35 | - | 122 | M24 | 4.42 |
| ABT50-EM-12-080 | ● | 50 | 12 | 80 | 42 | - | 42 | M24 | 3.97 |
| ABT50-EM-12-100 | ● | 50 | 12 | 100 | 42 | - | 62 | M24 | 4.17 |
| ABT50-EM-12-160 | ● | 50 | 12 | 160 | 42 | - | 122 | M24 | 4.8 |
| ABT50-EM-14-080 | ● | 50 | 14 | 80 | 44 | - | 42 | M24 | 3.99 |
| ABT50-EM-14-100 | ● | 50 | 14 | 100 | 44 | - | 62 | M24 | 4.2 |
| ABT50-EM-14-160 | ● | 50 | 14 | 160 | 44 | - | 122 | M24 | 4.91 |
| ABT50-EM-16-080 | ● | 50 | 16 | 80 | 48 | - | 42 | M24 | 4.06 |
| ABT50-EM-16-100 | ● | 50 | 16 | 100 | 48 | - | 62 | M24 | 4.33 |
| ABT50-EM-16-160 | ● | 50 | 16 | 160 | 48 | - | 122 | M24 | 5.16 |
| ABT50-EM-18-100 | ● | 50 | 18 | 100 | 50 | - | 62 | M24 | 4.38 |
| ABT50-EM-18-160 | ● | 50 | 18 | 160 | 50 | - | 122 | M24 | 5.28 |
| ABT50-EM-20-100 | ● | 50 | 20 | 100 | 52 | - | 62 | M24 | 4.42 |
| ABT50-EM-20-160 | ● | 50 | 20 | 160 | 52 | - | 122 | M24 | 5.4 |
| ABT50-EM-25-100 | ● | 50 | 25 | 100 | 63 | - | 62 | M24 | 4.76 |
| ABT50-EM-25-160 | ● | 50 | 25 | 160 | 63 | - | 122 | M24 | 6.22 |
| ABT50-EM-32-105 | ● | 50 | 32 | 105 | 72 | - | 67 | M24 | 5.18 |
| ABT50-EM-32-160 | ● | 50 | 32 | 160 | 72 | - | 122 | M24 | 6.89 |
| ABT50-EM-40-110 | ● | 50 | 40 | 110 | 80 | - | 72 | M24 | 5.49 |
| ABT50-EM-40-160 | ● | 50 | 40 | 160 | 80 | - | 122 | M24 | 7.42 |

**Yedek Parça** / *Spare Part* / *Ersatzteile*

*Veldon Sıkma Civatası DIN 1835 B*
*Clamping Screw Weldon DIN 1835 B*
*Weldon-Klemmschraube DIN 1835 B*

*Çektirme Civatası*
*Pull Stud*
*Anzugsbolzen*

Sipariş Örneği/Ordering Example/*Bestellbeispiel*
1 ad./pcs./stück ABT50-EM-06-070

● *Stokta / In Stock / Auf Lager* ○ *Stokta Yok / Non Stock Item / Kein Lagerartikel, Lieferzeit auf Anfrage*

*Daha fazla bilgi için, 56-71. sayfalara bakabilirsiniz. / For more info, you can check pages between 56-71. / Weitere Informationen finden Sie auf den Seiten 56–71.*

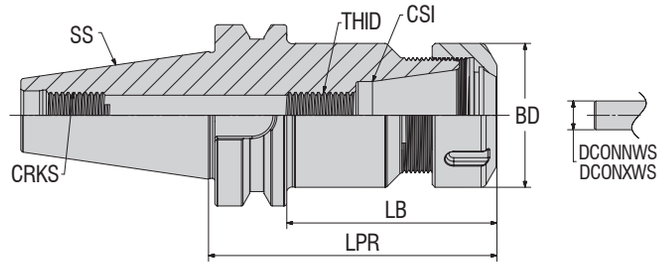


FORM AD | DIN ISO 15488 | JIS B 6339 (MAS403BT) | HRC 58±2 | G 2.5 25.000 min-1 U ≤ 1 gmm | CHIP | 0.003

| Sipariş Kodu *Ordering Code* *Bestell-Bezeichnung* | Stok *Stock* *Lager* | Tutucu Ölçüleri (mm) *Dimension (mm)* *Abmessung (mm)* | | | | | | | | | |
|---|---|---|---|---|---|---|---|---|---|---|---|
| | | SS | CSI | DCONNWS | DCONXWS | BD | LPR | LB | THID | CRKS | KG |
| ABT30-ER-16-060 | ● | 30 | ER16 | 0.5 | 10 | 28 | 60 | 33 | M10 | M12 | 0.5 |
| ABT30-ER-16-100 | ● | 30 | ER16 | 0.5 | 10 | 28 | 100 | 73 | M10 | M12 | 0.67 |
| ABT30-ER-25-060 | ● | 30 | ER25 | 1.0 | 16 | 42 | 60 | 33 | M16 | M12 | 0.61 |
| ABT30-ER-25-100 | ● | 30 | ER25 | 1.0 | 16 | 42 | 100 | 73 | M16 | M12 | 0.97 |
| ABT40-ER-16-063 | ● | 40 | ER16 | 0.5 | 10 | 28 | 63 | 36 | M10 | M16 | 1.06 |
| ABT40-ER-16-100 | ● | 40 | ER16 | 0.5 | 10 | 28 | 100 | 73 | M10 | M16 | 1.21 |
| ABT40-ER-16-130 | ● | 40 | ER16 | 0.5 | 10 | 28 | 130 | 103 | M10 | M16 | 1.33 |
| ABT40-ER-25-060 | ● | 40 | ER25 | 1.0 | 16 | 42 | 60 | 33 | M16 | M16 | 1.09 |
| ABT40-ER-25-100 | ● | 40 | ER25 | 1.0 | 16 | 42 | 100 | 73 | M16 | M16 | 1.49 |
| ABT40-ER-25-130 | ● | 40 | ER25 | 1.0 | 16 | 42 | 130 | 103 | M16 | M16 | 1.8 |
| ABT40-ER-32-070 | ● | 40 | ER32 | 2.0 | 20 | 50 | 70 | 43 | M16 | M16 | 1.25 |
| ABT40-ER-32-100 | ● | 40 | ER32 | 2.0 | 20 | 50 | 100 | 73 | M16 | M16 | 1.68 |
| ABT40-ER-32-160 | ● | 40 | ER32 | 2.0 | 20 | 50 | 160 | 133 | M16 | M16 | 2.58 |
| ABT40-ER-40-080 | ● | 40 | ER40 | 3.0 | 26 | 63 | 80 | 53 | M16 | M16 | 1.61 |
| ABT40-ER-40-100 | ● | 40 | ER40 | 3.0 | 26 | 63 | 100 | 73 | M16 | M16 | 2.08 |
| ABT40-ER-40-160 | ● | 40 | ER40 | 3.0 | 26 | 63 | 160 | 133 | M16 | M16 | 3.48 |
| ABT50-ER-16-070 | ○ | 50 | ER16 | 0.5 | 10 | 28 | 70 | 43 | M10 | M24 | 3.69 |
| ABT50-ER-16-100 | ● | 50 | ER16 | 0.5 | 10 | 28 | 100 | 73 | M10 | M24 | 3.81 |
| ABT50-ER-16-160 | ○ | 50 | ER16 | 0.5 | 10 | 28 | 160 | 133 | M10 | M24 | 4.1 |
| ABT50-ER-25-070 | ● | 50 | ER25 | 1.0 | 16 | 42 | 70 | 43 | M16 | M24 | 3.73 |
| ABT50-ER-25-100 | ● | 50 | ER25 | 1.0 | 16 | 42 | 100 | 73 | M16 | M24 | 4.03 |
| ABT50-ER-25-130 | ● | 50 | ER25 | 1.0 | 16 | 42 | 130 | 103 | M16 | M24 | 4.33 |
| ABT50-ER-25-160 | ○ | 50 | ER25 | 1.0 | 16 | 42 | 160 | 133 | M16 | M24 | 4.7 |
| ABT50-ER-32-070 | ● | 50 | ER32 | 2.0 | 20 | 50 | 70 | 43 | M16 | M24 | 3.75 |
| ABT50-ER-32-100 | ● | 50 | ER32 | 2.0 | 20 | 50 | 100 | 73 | M16 | M24 | 4.17 |
| ABT50-ER-32-130 | ● | 50 | ER32 | 2.0 | 20 | 50 | 130 | 103 | M16 | M24 | 4.61 |
| ABT50-ER-32-160 | ● | 50 | ER32 | 2.0 | 20 | 50 | 160 | 133 | M16 | M24 | 5.12 |
| ABT50-ER-40-080 | ● | 50 | ER40 | 3.0 | 26 | 63 | 80 | 53 | M16 | M24 | 4 |
| ABT50-ER-40-100 | ● | 50 | ER40 | 3.0 | 26 | 63 | 100 | 73 | M16 | M24 | 4.49 |
| ABT50-ER-40-160 | ● | 50 | ER40 | 3.0 | 26 | 63 | 160 | 133 | M16 | M24 | 5.99 |

**Yedek Parça** / *Spare Part* / *Ersatzteile*

Sipariş Örneği/Ordering Example/*Bestellbeispiel*
1 ad./pcs./stück ABT30-ER-16-060

*ER Tipi Anahtar*
*Wrench ER*
*Spannschlüssel ER*

*Pensler ER DIN6499/ISO 15488-B*
*Collet Chuck ER DIN6499/ISO 15488-B*
*Spannschlüssel ER DIN6499/ISO 15488-B*

*Pens Kapağı*
*Clamping Nuts*
*Spannmutter*

*Çektirme Civatası*
*Pull Stud*
*Anzugsbolzen*

*Daha fazla bilgi için, 56-71. sayfalara bakabilirsiniz. / For more info, you can check pages between 56-71. / Weitere Informationen finden Sie auf den Seiten 56–71.*

● *Stokta / In Stock / Auf Lager* ○ *Stokta Yok / Non Stock Item / Kein Lagerartikel, Lieferzeit auf Anfrage*

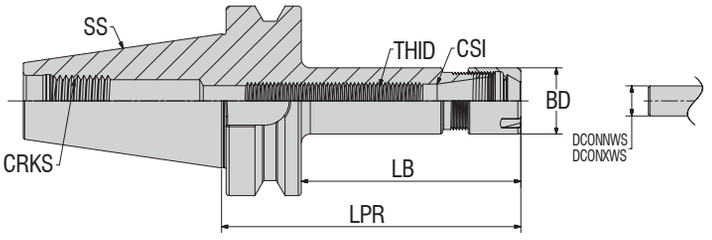


FORM AD | JIS B 6339 (MAS403BT) | HRC 58±2 | G 2.5 25.000 min-1 U ≤ 1 gmm | CHIP | 0.003

| Sipariş Kodu *Ordering Code* *Bestell-Bezeichnung* | Stok *Stock* *Lager* | Tutucu Ölçüleri (mm) *Dimension (mm)* *Abmessung (mm)* | | | | | | | | | |
|---|---|---|---|---|---|---|---|---|---|---|---|
| | | SS | CSI | DCONWS | DCONXWS | BD | LPR | LB | THID | CRKS | KG |
| **ABT40-ER-16-100-M** | ● | 40 | ER16 | 0.5 | 10 | 22 | 100 | 73 | M10 | M16 | 1.11 |
| **ABT40-ER-16-130-M** | ● | 40 | ER16 | 0.5 | 10 | 22 | 130 | 103 | M10 | M16 | 1.19 |
| **ABT50-ER-16-100-M** | ● | 50 | ER16 | 0.5 | 10 | 22 | 100 | 62 | M10 | M24 | 3.73 |
| **ABT50-ER-16-130-M** | ● | 50 | ER16 | 0.5 | 10 | 22 | 130 | 92 | M10 | M10 | 3.81 |
| **ABT50-ER-16-160-M** | ● | 50 | ER16 | 0.5 | 10 | 22 | 160 | 122 | M10 | M10 | 3.93 |

**Yedek Parça** / *Spare Part* / *Ersatzteile*

*ER Tipi Anahtar Mini (M)*
*Wrench ER Mini (M)*
*Spannschlüssel ER Mini (M)*

*Pensler ER DIN6499/ISO 15488-B*
*Collet Chuck ER DIN6499/ISO 15488-B*
*Spannschlüssel ER DIN6499/ISO 15488-B*

*Çektirme Civatası*
*Pull Stud*
*Anzugsbolzen*

*Pens Kapağı*
*Clamping Nuts*
*Spannmutter*

Sipariş Örneği/Ordering Example/*Bestellbeispiel*
1 ad./pcs./stück ABT40-ER-16-100-M

*Daha fazla bilgi için, 56-71. sayfalara bakabilirsiniz. / For more info, you can check pages between 56-71. / Weitere Informationen finden Sie auf den Seiten 56–71.*

*Daha fazla bilgi için, 56-71. sayfalara bakabilirsiniz.*
*For more info, you can check pages between 56-71.*
*Weitere Informationen finden Sie auf den Seiten 56-71.*

● *Stokta / In Stock / Auf Lager* ○ *Stokta Yok / Non Stock Item / Kein Lagerartikel, Lieferzeit auf Anfrage*

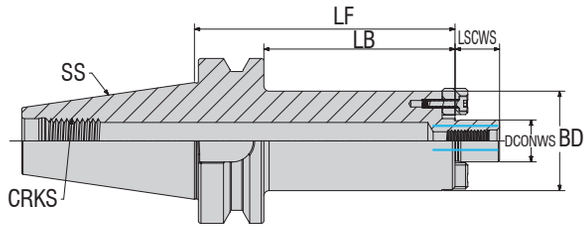


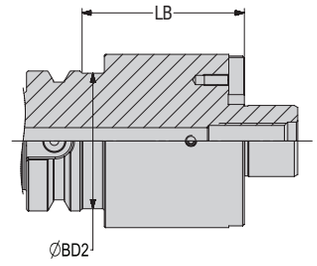


FORM AD | JIS B 6339 (MAS403BT) | HRC 58±2 | G 2.5 25.000 min-1 U ≤ 1 gmm | CHIP | g4 | 0.005

| Sipariş Kodu *Ordering Code* *Bestell-Bezeichnung* | Stok *Stock* *Lager* | Tutucu Ölçüleri (mm) *Dimension (mm)* *Abmessung (mm)* | | | | | | | | |
|---|---|---|---|---|---|---|---|---|---|---|
| | | SS | DCONWS | LF | BD | BD2 | LSCWS | LB | CRKS | KG |
| ABT30-FM-16-040 | ● | 30 | 16 | 40 | 38 | - | 17 | 18 | M12 | 0.58 |
| ABT30-FM-22-040 | ● | 30 | 22 | 40 | 48 | 45 | 19 | 18 | M12 | 0.7 |
| ABT30-FM-27-050 | ● | 30 | 27 | 50 | 60 | 45 | 21.5 | 28 | M12 | 1.06 |
| ABT30-FM-32-050 | ● | 30 | 32 | 50 | 78 | 45 | 24 | 28 | M12 | 1.46 |
| ABT40-FM-16-055 | ● | 40 | 16 | 55 | 38 | - | 17 | 28 | M16 | 1.38 |
| ABT40-FM-16-100 | ● | 40 | 16 | 100 | 38 | - | 17 | 73 | M16 | 1.67 |
| ABT40-FM-22-040 | ● | 40 | 22 | 40 | 48 | - | 19 | 13 | M16 | 1.25 |
| ABT40-FM-22-055 | ● | 40 | 22 | 55 | 48 | - | 19 | 28 | M16 | 1.81 |
| ABT40-FM-22-100 | ● | 40 | 22 | 100 | 48 | - | 19 | 73 | M16 | 2.1 |
| ABT40-FM-27-055 | ● | 40 | 27 | 55 | 60 | - | 21.5 | 28 | M16 | 2.44 |
| ABT40-FM-27-100 | ● | 40 | 27 | 100 | 60 | - | 21.5 | 73 | M16 | 2.73 |
| ABT40-FM-32-050 | ● | 40 | 32 | 50 | 78 | 61 | 24 | 23 | M16 | 1.93 |
| ABT40-FM-32-060 | ● | 40 | 32 | 60 | 78 | 61 | 24 | 33 | M16 | 3.5 |
| ABT40-FM-32-100 | ● | 40 | 32 | 100 | 78 | 61 | 24 | 73 | M16 | 3.79 |
| ABT40-FM-40-050 | ● | 40 | 40 | 50 | 88 | 54 | 27 | 23 | M16 | 2.13 |
| ABT40-FM-40-060 | ● | 40 | 40 | 60 | 88 | 54 | 27 | 33 | M16 | 2.25 |
| ABT40-FM-40-100 | ● | 40 | 40 | 100 | 88 | 54 | 27 | 73 | M16 | 4.18 |
| ABT50-FM-16-050 | ● | 50 | 16 | 50 | 38 | - | 17 | 12 | M24 | 3.8 |
| ABT50-FM-16-055 | ● | 50 | 16 | 55 | 38 | - | 17 | 17 | M24 | 3.85 |
| ABT50-FM-16-100 | ○ | 50 | 16 | 100 | 38 | - | 17 | 62 | M24 | 4.25 |
| ABT50-FM-16-160 | ● | 50 | 16 | 160 | 38 | - | 17 | 122 | M24 | 4.86 |
| ABT50-FM-22-055 | ● | 50 | 22 | 55 | 48 | - | 19 | 17 | M24 | 3.98 |
| ABT50-FM-22-100 | ○ | 50 | 22 | 100 | 48 | - | 19 | 62 | M24 | 4.61 |
| ABT50-FM-22-160 | ● | 50 | 22 | 160 | 48 | - | 19 | 122 | M24 | 5.57 |
| ABT50-FM-27-055 | ○ | 50 | 27 | 55 | 60 | - | 21.5 | 17 | M24 | 4.17 |
| ABT50-FM-27-100 | ● | 50 | 27 | 100 | 60 | - | 21.5 | 62 | M24 | 5.17 |
| ABT50-FM-27-160 | ○ | 50 | 27 | 160 | 60 | - | 21.5 | 122 | M24 | 6.63 |
| ABT50-FM-32-100 | ○ | 50 | 32 | 100 | 78 | - | 24 | 62 | M24 | 6.2 |
| ABT50-FM-32-160 | ● | 50 | 32 | 160 | 78 | - | 24 | 122 | M24 | 8.61 |
| ABT50-FM-40-100 | ● | 50 | 40 | 100 | 88 | - | 27 | 62 | M24 | 6.91 |
| ABT50-FM-40-160 | ● | 50 | 40 | 160 | 88 | - | 27 | 122 | M24 | 9.97 |
| ABT50-FM-60-080 | ● | 50 | 60 | 80 | 128 | 80 | 40 | 42 | M24 | 8.02 |

**Yedek Parça** / *Spare Part* / *Ersatzteile*

Sipariş Örneği/Ordering Example/*Bestellbeispiel*
1 ad./pcs./stück ABT30-FM-16-040

*Tarama Başlık Sıkma Civatası DIN 6367*
*Bolt For Shell Arbor DIN 6367*
*Scankopf-Klemmschraube DIN 6367*

*Tarama Başlık Civatası Sıkma Anahtarı DIN 6368*
*Wrench For Shell Arbor DIN 6368*
*Spannschlüssel DIN 6368 für Aufsteckdorne*

*Çektirme Civatası*
*Pull Stud*
*Anzugsbolzen*

*Alın Kamalı Malafa Kaması*
*Drive Key*
*Mitnehmersteine Mit Schraube*

*Daha fazla bilgi için, 56-71. sayfalara bakabilirsiniz. / For more info, you can check pages between 56-71. / Weitere Informationen finden Sie auf den Seiten 56–71.*

● *Stokta / In Stock / Auf Lager* ○ *Stokta Yok / Non Stock Item / Kein Lagerartikel, Lieferzeit auf Anfrage*

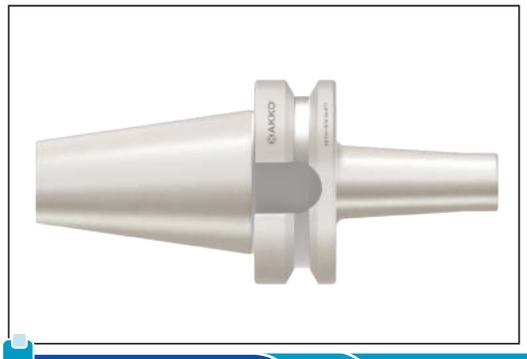

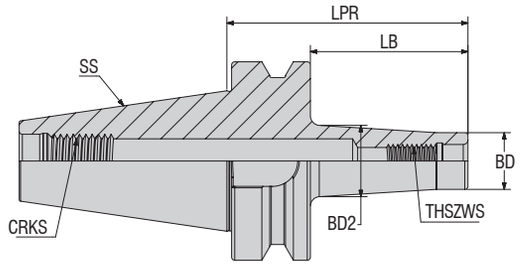


FORM AD | JIS B 6339 (MAS403BT) | HRC 58±2 | G 2.5 25.000 min-1 U ≤ 1 gmm | CHIP | g4 | 0.003

| Sipariş Kodu *Ordering Code* *Bestell-Bezeichnung* | Stok *Stock* *Lager* | Tutucu Ölçüleri (mm) *Dimension (mm)* *Abmessung (mm)* | | | | | | | |
|---|---|---|---|---|---|---|---|---|---|
| | | SS | THSZW | BD | BD2 | LPR | LB | CRKS | KG |
| ABT40-MM-06-052 | ● | 40 | M6 | 10 | 13 | 52 | 25 | M16 | 0.96 |
| ABT40-MM-06-077 | ● | 40 | M6 | 10 | 19.5 | 77 | 50 | M16 | 1 |
| ABT40-MM-06-102 | ● | 40 | M6 | 10 | 22.5 | 102 | 75 | M16 | 1.05 |
| ABT40-MM-08-052 | ● | 40 | M8 | 13 | 15 | 52 | 25 | M16 | 0.96 |
| ABT40-MM-08-077 | ● | 40 | M8 | 13 | 22.5 | 77 | 50 | M16 | 1.02 |
| ABT40-MM-08-102 | ● | 40 | M8 | 13 | 23 | 102 | 75 | M16 | 1.07 |
| ABT40-MM-08-127 | ● | 40 | M8 | 13 | 25 | 127 | 100 | M16 | 1.14 |
| ABT40-MM-10-052 | ● | 40 | M10 | 18 | 20 | 52 | 25 | M16 | 0.98 |
| ABT40-MM-10-077 | ● | 40 | M10 | 18 | 23 | 77 | 50 | M16 | 1.05 |
| ABT40-MM-10-102 | ● | 40 | M10 | 18 | 28 | 102 | 75 | M16 | 1.16 |
| ABT40-MM-10-127 | ● | 40 | M10 | 18 | 32 | 127 | 100 | M16 | 1.29 |
| ABT40-MM-12-052 | ● | 40 | M12 | 21 | 24 | 52 | 25 | M16 | 1 |
| ABT40-MM-12-077 | ● | 40 | M12 | 21 | 24 | 77 | 50 | M16 | 1.06 |
| ABT40-MM-12-102 | ● | 40 | M12 | 21 | 31 | 102 | 75 | M16 | 1.21 |
| ABT40-MM-12-127 | ● | 40 | M12 | 21 | 32.5 | 127 | 100 | M16 | 1.35 |
| ABT40-MM-12-177 | ● | 40 | M12 | 21 | 39.5 | 177 | 150 | M16 | 1.76 |
| ABT40-MM-16-052 | ● | 40 | M16 | 29 | - | 52 | 25 | M16 | 1.03 |
| ABT40-MM-16-077 | ● | 40 | M16 | 29 | 34 | 77 | 50 | M16 | 1.18 |
| ABT40-MM-16-102 | ● | 40 | M16 | 29 | 34 | 102 | 75 | M16 | 1.33 |
| ABT40-MM-16-127 | ● | 40 | M16 | 29 | 36 | 127 | 100 | M16 | 1.52 |
| ABT40-MM-16-152 | ● | 40 | M16 | 29 | 40 | 152 | 125 | M16 | 1.78 |
| ABT40-MM-16-177 | ● | 40 | M16 | 29 | 42.5 | 177 | 150 | M16 | 2.04 |
| ABT50-MM-08-088 | ● | 50 | M8 | 13 | 22.4 | 88 | 50 | M24 | 3.66 |
| ABT50-MM-08-138 | ● | 50 | M8 | 13 | 24.5 | 138 | 100 | M24 | 3.78 |
| ABT50-MM-08-188 | ● | 50 | M8 | 13 | 29.5 | 188 | 150 | M24 | 3.97 |
| ABT50-MM-10-088 | ● | 50 | M10 | 18 | 23 | 88 | 50 | M24 | 3.68 |
| ABT50-MM-10-138 | ● | 50 | M10 | 18 | 31.5 | 138 | 100 | M24 | 3.92 |
| ABT50-MM-10-188 | ● | 50 | M10 | 18 | 36 | 188 | 150 | M24 | 4.15 |
| ABT50-MM-12-088 | ● | 50 | M12 | 21 | 24 | 88 | 50 | M24 | 3.7 |
| ABT50-MM-12-138 | ● | 50 | M12 | 21 | 32.5 | 138 | 100 | M24 | 3.97 |
| ABT50-MM-12-188 | ● | 50 | M12 | 21 | 39.5 | 188 | 150 | M24 | 4.38 |
| ABT50-MM-16-088 | ● | 50 | M16 | 29 | 34 | 88 | 50 | M24 | 3.82 |
| ABT50-MM-16-138 | ● | 50 | M16 | 29 | 36 | 138 | 100 | M24 | 4.15 |
| ABT50-MM-16-188 | ● | 50 | M16 | 29 | 42.5 | 188 | 150 | M24 | 4.66 |

**Yedek Parça** / *Spare Part* / *Ersatzteile*

*Çektirme Civatası*
*Pull Stud*
*Anzugsbolzen*

Sipariş Örneği/Ordering Example/*Bestellbeispiel*
1 ad./pcs./stück ABT40-MM-06-052

● *Stokta / In Stock / Auf Lager* ○ *Stokta Yok / Non Stock Item / Kein Lagerartikel, Lieferzeit auf Anfrage*

*Daha fazla bilgi için, 56-71. sayfalara bakabilirsiniz. / For more info, you can check pages between 56-71. / Weitere Informationen finden Sie auf den Seiten 56–71.*

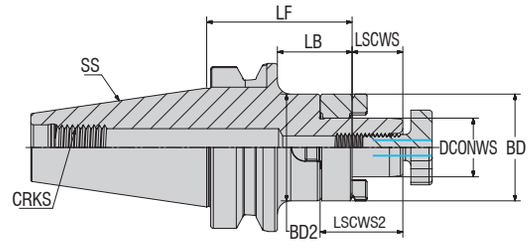


FORM AD | JIS B 6339 (MAS403BT) | HRC 58±2 | G 2.5 25.000 min-1 U ≤ 1 gmm | CHIP | g4 | 0.005

| Sipariş Kodu *Ordering Code* *Bestell-Bezeichnung* | Stok *Stock* *Lager* | Tutucu Ölçüleri (mm) *Dimension (mm)* *Abmessung (mm)* | | | | | | | | | |
|---|---|---|---|---|---|---|---|---|---|---|---|
| | | SS | DCONWS | LF | BD | BD2 | LSCWS | LSCWS2 | LB | CRKS | KG |
| ABT30-FMC-16-045 | ○ | 30 | 16 | 45 | 32 | - | 17 | 27 | 23 | M12 | 0.56 |
| ABT30-FMC-22-047 | ○ | 30 | 22 | 47 | 40 | - | 19 | 31 | 25 | M12 | 0.7 |
| ABT30-FMC-27-049 | ○ | 30 | 27 | 49 | 48 | - | 21 | 33.5 | 27 | M12 | 0.87 |
| ABT30-FMC-32-052 | ○ | 30 | 32 | 52 | 58 | - | 24 | 38 | 30 | M12 | 1.12 |
| ABT40-FMC-16-055 | ○ | 40 | 16 | 55 | 32 | - | 17 | 27 | 28 | M16 | 1.17 |
| ABT40-FMC-16-100 | ○ | 40 | 16 | 100 | 32 | - | 17 | 27 | 73 | M16 | 1.43 |
| ABT40-FMC-16-130 | ○ | 40 | 16 | 130 | 32 | - | 17 | 27 | 103 | M16 | 1.61 |
| ABT40-FMC-16-160 | ○ | 40 | 16 | 160 | 32 | 38 | 17 | 27 | 133 | M16 | 1.87 |
| ABT40-FMC-22-055 | ○ | 40 | 22 | 55 | 40 | - | 19 | 31 | 28 | M16 | 1.28 |
| ABT40-FMC-22-100 | ○ | 40 | 22 | 100 | 40 | - | 19 | 31 | 73 | M16 | 1.68 |
| ABT40-FMC-22-130 | ○ | 40 | 22 | 130 | 40 | - | 19 | 31 | 103 | M16 | 1.95 |
| ABT40-FMC-22-160 | ○ | 40 | 22 | 160 | 40 | 46.5 | 19 | 31 | 133 | M16 | 2.33 |
| ABT40-FMC-27-055 | ○ | 40 | 27 | 55 | 48 | - | 21 | 33.5 | 28 | M16 | 1.44 |
| ABT40-FMC-27-100 | ○ | 40 | 27 | 100 | 48 | - | 21 | 33.5 | 73 | M16 | 2.04 |
| ABT40-FMC-27-130 | ○ | 40 | 27 | 130 | 48 | - | 21 | 33.5 | 103 | M16 | 2.44 |
| ABT40-FMC-27-160 | ○ | 40 | 27 | 160 | 48 | 55 | 21 | 33.5 | 133 | M16 | 2.98 |
| ABT40-FMC-32-060 | ○ | 40 | 32 | 60 | 58 | - | 24 | 38 | 33 | M16 | 1.8 |
| ABT40-FMC-32-100 | ○ | 40 | 32 | 100 | 58 | - | 24 | 38 | 73 | M16 | 2.59 |
| ABT40-FMC-32-130 | ○ | 40 | 32 | 130 | 58 | - | 24 | 38 | 103 | M16 | 3.18 |
| ABT40-FMC-32-160 | ○ | 40 | 32 | 160 | 58 | - | 24 | 38 | 133 | M16 | 3.77 |
| ABT40-FMC-40-060 | ○ | 40 | 40 | 60 | 70 | - | 27 | 41 | 33 | M16 | 2.19 |
| ABT50-FMC-16-070 | ○ | 50 | 16 | 70 | 32 | - | 17 | 27 | 32 | M24 | 3.85 |
| ABT50-FMC-16-100 | ○ | 50 | 16 | 100 | 32 | - | 17 | 27 | 62 | M24 | 4.03 |
| ABT50-FMC-16-130 | ○ | 50 | 16 | 130 | 32 | - | 17 | 27 | 92 | M24 | 4.2 |
| ABT50-FMC-16-160 | ○ | 50 | 16 | 160 | 32 | 37 | 17 | 27 | 122 | M24 | 4.43 |
| ABT50-FMC-22-070 | ○ | 50 | 22 | 70 | 40 | - | 19 | 31 | 32 | M24 | 3.97 |
| ABT50-FMC-22-100 | ○ | 50 | 22 | 100 | 40 | - | 19 | 31 | 62 | M24 | 4.23 |
| ABT50-FMC-22-130 | ○ | 50 | 22 | 130 | 40 | - | 19 | 31 | 92 | M24 | 4.5 |
| ABT50-FMC-22-160 | ○ | 50 | 22 | 160 | 40 | 45.5 | 19 | 31 | 122 | M24 | 4.84 |
| ABT50-FMC-27-070 | ○ | 50 | 27 | 70 | 48 | - | 21 | 33.5 | 32 | M24 | 4.15 |
| ABT50-FMC-27-100 | ○ | 50 | 27 | 100 | 48 | - | 21 | 33.5 | 62 | M24 | 4.55 |
| ABT50-FMC-27-130 | ○ | 50 | 27 | 130 | 48 | - | 21 | 33.5 | 92 | M24 | 4.95 |
| ABT50-FMC-27-160 | ○ | 50 | 27 | 160 | 48 | 53.5 | 21 | 33.5 | 122 | M24 | 5.44 |
| ABT50-FMC-32-070 | ○ | 50 | 32 | 70 | 58 | - | 24 | 38 | 32 | M24 | 4.43 |
| ABT50-FMC-32-100 | ○ | 50 | 32 | 100 | 58 | - | 24 | 38 | 62 | M24 | 5.03 |
| ABT50-FMC-32-130 | ○ | 50 | 32 | 130 | 58 | - | 24 | 38 | 92 | M24 | 5.62 |
| ABT50-FMC-32-160 | ○ | 50 | 32 | 160 | 58 | 64 | 24 | 38 | 122 | M24 | 6.34 |
| ABT50-FMC-40-070 | ○ | 50 | 40 | 70 | 70 | - | 27 | 41 | 32 | M24 | 4.88 |
| ABT50-FMC-40-100 | ○ | 50 | 40 | 100 | 70 | - | 27 | 41 | 62 | M24 | 5.76 |
| ABT50-FMC-40-130 | ○ | 50 | 40 | 130 | 70 | - | 27 | 41 | 92 | M24 | 6.64 |
| ABT50-FMC-40-160 | ○ | 50 | 40 | 160 | 70 | 76 | 27 | 41 | 122 | M24 | 7.68 |

**Yedek Parça** / *Spare Part* / *Ersatzteile*

*Tarama Başlık Sıkma Civatası DIN 6367*
*Bolt For Shell Arbor DIN 6367*
*Scankopf-Klemmschraube DIN 6367*

*Tarama Başlık Civatası Sıkma Anahtarı DIN 6368*
*Wrench For Shell Arbor DIN 6368*
*Spannschlüssel DIN 6368 für Aufsteckdorne*

*Çektirme Civatası*
*Pull Stud*
*Anzugsbolzen*

*Tırnaklı Pul DIN 6366*
*Clutch Drive Rings To DIN 6366*
*Mitnehmerringe DIN 6366*

*Kama DIN 6885*
*Drive Key DIN 6885*
*Paßfeder DIN 6885*

Sipariş Örneği/Ordering Example/*Bestellbeispiel*
1 ad./pcs./stück ABT30-FMC-16-045

*Daha fazla bilgi için, 56-71. sayfalara bakabilirsiniz. / For more info, you can check pages between 56-71. / Weitere Informationen finden Sie auf den Seiten 56–71.*

● *Stokta / In Stock / Auf Lager* ○ *Stokta Yok / Non Stock Item / Kein Lagerartikel, Lieferzeit auf Anfrage*

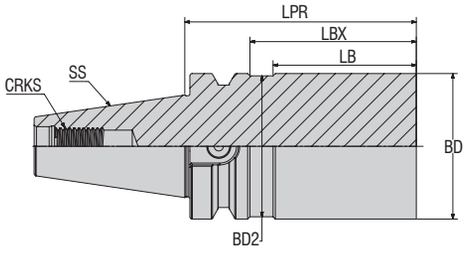


FORM AD | JIS B 6339 (MAS403BT) | CHIP

| Sipariş Kodu *Ordering Code* *Bestell-Bezeichnung* | Stok *Stock* *Lager* | Tutucu Ölçüleri (mm) *Dimension (mm)* *Abmessung (mm)* | | | | | | | |
|---|---|---|---|---|---|---|---|---|---|
| | | SS | BD | BD2 | LPR | LBX | LB | CRKS | KG |
| **ABT40-BL41-63-250** | ○ | 40 | 63 | 61 | 250 | 223 | 213 | M16 | 6.38 |
| **ABT50-BL41-97-315** | ○ | 50 | 97 | - | 315 | 277 | - | M24 | 19.61 |

**Yedek Parça** / *Spare Part* / *Ersatzteile*

*Çektirme Civatası*
*Pull Stud*
*Anzugsbolzen*

Sipariş Örneği/Ordering Example/*Bestellbeispiel*
1 ad./pcs./stück ABT40-BL41-63-250

● *Stokta / In Stock / Auf Lager* ○ *Stokta Yok / Non Stock Item / Kein Lagerartikel, Lieferzeit auf Anfrage*

*Daha fazla bilgi için, 56-71. sayfalara bakabilirsiniz. / For more info, you can check pages between 56-71. / Weitere Informationen finden Sie auf den Seiten 56–71.*

# AK-PLUS TUTUCULAR

## *AK-PLUS HOLDERS*

## *AK-PLUS HALTER*

Teknik çizim ve fotoğraflar değişkenlik gösterebilir.
Illustrations shown may vary from actual product.
*Das Produkt kann von dem gezeigten Bild abweichen.*

AKKO®

konuşulan
the spoken kalite...
quality...

www.akko.com.tr

| 1 | 2 | 3 | 4 | 5 |
|---|---|---|---|---|
| A | BBT40 | EM | 06 | 080 |
| AKKO | GÖVDE TİPİ / SHANK TYPE / KÖRPERTYP | FORMU / FORM / FORM | ÇAP / DIAMETER / DURCHMESSER | TUTUCU BOY / HOLDER SIZE / HALTER GRÖSSE |

**AK-PLUS** 30-40-50

**EM** : **VELDON ŞAFTLI TAKIM TUTUCULAR** / END MILL HOLDER / *FRÄSERAUFNAHMEN*
**ER** : **ER SIKMA PENSLİ TAKIM TUTUCULAR** / COLLET CHUCKS (ER) / *SPANNFUTTER ER*
**FM** : **YÜZEY FREZE TAKIM TUTUCULAR** / SHELL MILL HOLDERS / *AUFSTECKFRÄSERDORNE*
**MM** : **MODÜLER PARMAK FREZE TUTUCULAR** / MILLING CUTTER ARBORS FOR SCREW-ON TYPE MILLING CUTTERS / *MODULARE SCHAFTFRÄSERHALTER*
**FMC** : **KOMBİNE YÜZEY FREZE TAKIM TUTUCULARI** / COMBI SHELL MILL HOLDER / *KOMBINIERTE FLÄCHENFRÄSHALTER*

## KALİTE KONTROL
## QUALITY CONTROL
## QUALITÄTSKONTROLLE

AK-PLUS **AK-PLUS** 30-40-50

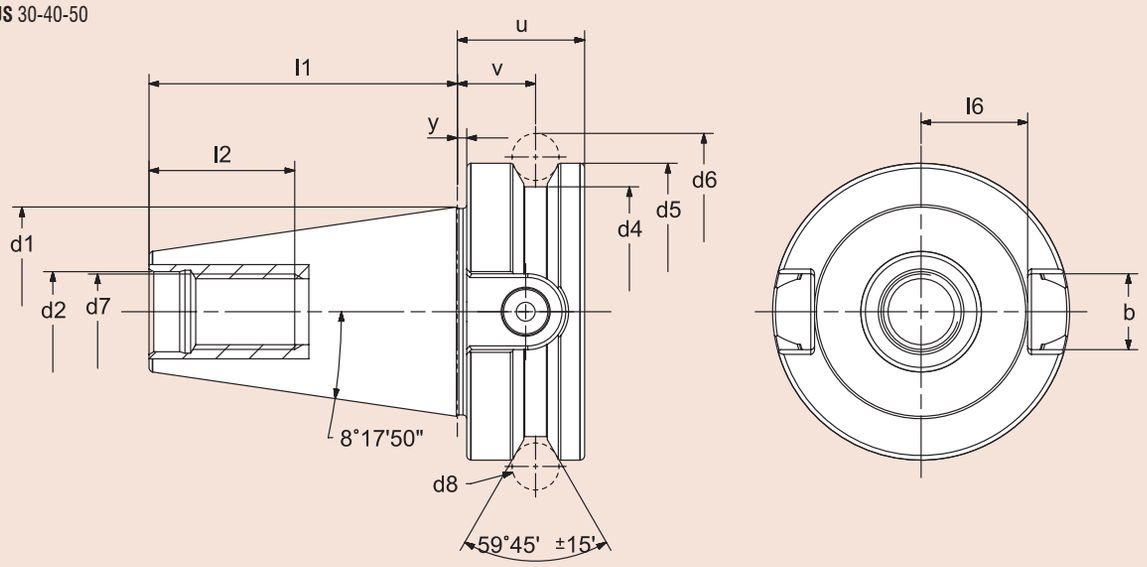


***Tasarım:***
- *Konik açısı: 8° 17'50" + 4"*
- *Takım tutucular, yüzeyi sertleştirilmiş 58 ± 2 HRC*
- *Çekirdekte çekme dayanımı en az 950 N/mm2*
- *AT3 tolerans kalitesinde koniklik*
- *Dahili veri çipi için çap Ø 10 mm*

***Design:***
- *Angle of cone: 8° 17'50" + 4"*
- *Tool holders case-hardened 58 ± 2 HRC*
- *Tensile strength in the core at least 950 N/mm2*
- *Taper in tolerance quality AT3*
- *Incl. bore for data chip Ø 10 mm*

***Ausführung:***
- *Kegelwinkel: 8° 17'50" + 4"*
- *Aufnahmen einsatzgehärtet 58 ± 2 HRC*
- *Zugfestigkeit im Kern mindestens 950 N/mm2*
- *Steilkegel in Kegelwinkel-Toleranzqualität AT3*
- *Inkl. Codeträgerbohrung Ø 10 mm*

| AK-PLUS | d1 | d2 H8 | d4 0.0 -0.05 | d5 h8 | d6 ±0.05 | d7 6H | d8 | u min. | v ±0.1 | y ±0.005 | l1 ±0.1 | l2 min. | l6 0.0 -0.2 | b 0.2 0.0 |
|---|---|---|---|---|---|---|---|---|---|---|---|---|---|---|
| 30 | 31.75 | 12.5 | 38 | 46 | 56.144 | M12x1.75 | 8 | 22 | 13.6 | 1 | 48.4 | 24 | 16.3 | 16.1 |
| 40 | 44.45 | 17 | 53 | 63 | 75.679 | M16x2 | 10 | 27 | 16.6 | 1 | 65.4 | 30 | 22.6 | 16.1 |
| 50 | 69.85 | 25 | 85 | 100 | 119.020 | M24x3 | 15 | 38 | 23.2 | 1.5 | 101.8 | 45 | 35.4 | 25.7 |

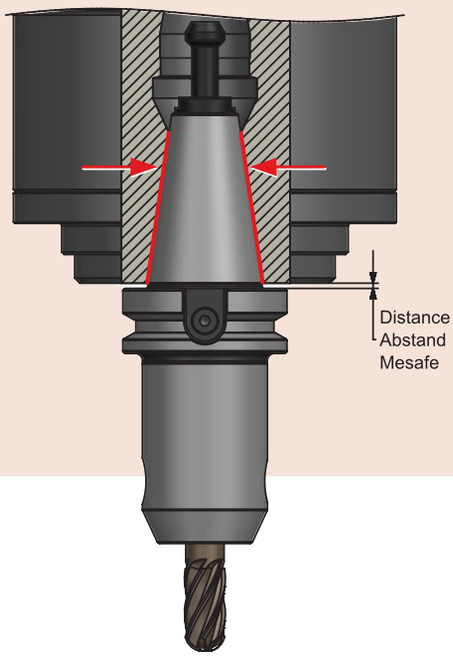


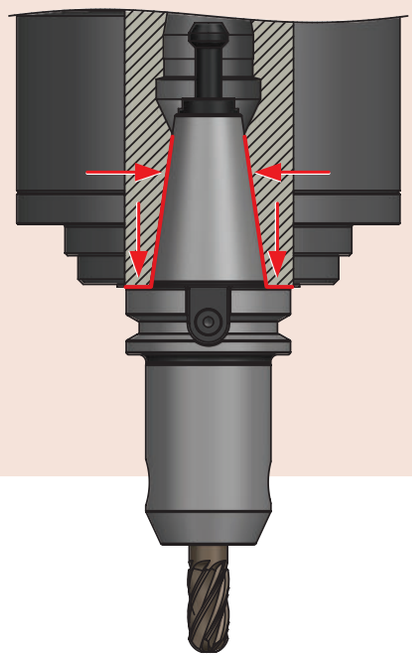

***Tasarım:***
- Makine tam performans kullanılabilir
- Sabit ve daha büyük tüm yüzey teması
- Tüm yüzey teması sayesinde daha az titreşim
- Daha iyi yüzey kalitesi ve daha yüksek işleme güvenilirliği
- Daha uzun kesici takım kullanım ömrü
- Tekrarlayan takım değiştirmelerde yüksek hassasiyet
- Yüksek mil hızında dahi yüksek stabilite

***Design:***
- Machine performance can be used to the full extent
- Stable and bigger, complete full face contact
- Less vibrations due to large full face contact
- Better surface finish and higher reliability of processing
- Longer service life of the cutting tools
- Better tool change repeat accuracy
- No loss of stability at high spindle speeds

***Ausführung:***
- Maschinenleistung kann voll genutzt werden
- Stabile und vergrößerte, vollständige Plananlage
- Weniger Vibrationen aufgrund der großen Plananlage
- Verbesserte Oberflächengüte und prozesssichere Maßhaltigkeit am Werkstück
- Höhere Standzeit der Schneidwerkzeuge
- Bessere Werkzeugwechsel-Wiederholgenauigkeit
- Kein Stabilitätsverlust bei hohen Spindeldrehzahlen

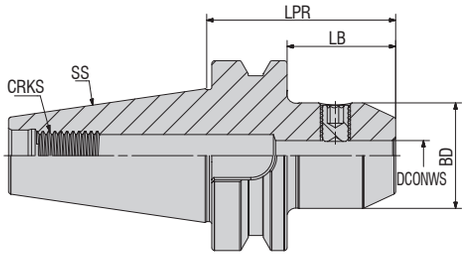


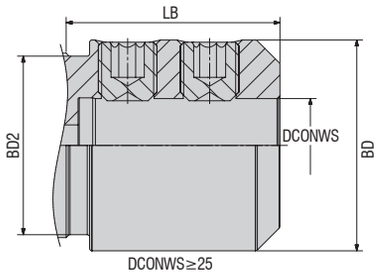


DIN 1835-B | JIS B 6339 (MAS403BT) | HRC 58±2 | H5 | G 2.5 25.000 min-1 U ≤ 1 gmm | CHIP | 0.003

| Sipariş Kodu *Ordering Code* *Bestell-Bezeichnung* | Stok *Stock* *Lager* | Tutucu Ölçüleri (mm) *Dimension (mm)* *Abmessung (mm)* | | | | | | | |
|---|---|---|---|---|---|---|---|---|---|
| | | SS | DCONWS | LPR | BD | BD2 | LB | CRKS | KG |
| ABBT30-EM-06-050 | ○ | 30 | 06 | 50 | 25 | - | 28 | M12 | 0.46 |
| ABBT30-EM-08-050 | ○ | 30 | 08 | 50 | 28 | - | 28 | M12 | 0.49 |
| ABBT30-EM-10-050 | ○ | 30 | 10 | 50 | 35 | - | 28 | M12 | 0.54 |
| ABBT30-EM-12-050 | ○ | 30 | 12 | 50 | 42 | - | 28 | M12 | 0.6 |
| ABBT30-EM-14-050 | ○ | 30 | 14 | 50 | 44 | - | 28 | M12 | 0.61 |
| ABBT30-EM-16-063 | ○ | 30 | 16 | 63 | 48 | 45 | 41 | M12 | 0.81 |
| ABBT30-EM-18-063 | ○ | 30 | 18 | 63 | 50 | 45 | 41 | M12 | 0.82 |
| ABBT40-EM-06-100 | ○ | 40 | 06 | 100 | 25 | - | 73 | M16 | 1.2 |
| ABBT40-EM-06-160 | ○ | 40 | 06 | 160 | 25 | - | 133 | M16 | 1.44 |
| ABBT40-EM-08-050 | ○ | 40 | 08 | 50 | 28 | - | 23 | M16 | 1.05 |
| ABBT40-EM-08-100 | ○ | 40 | 08 | 100 | 28 | - | 73 | M16 | 1.27 |
| ABBT40-EM-08-160 | ○ | 40 | 08 | 160 | 28 | - | 133 | M16 | 1.57 |
| ABBT40-EM-10-063 | ○ | 40 | 10 | 63 | 35 | - | 36 | M16 | 1.17 |
| ABBT40-EM-10-100 | ○ | 40 | 10 | 100 | 35 | - | 73 | M16 | 1.41 |
| ABBT40-EM-12-063 | ○ | 40 | 12 | 63 | 42 | - | 36 | M16 | 1.26 |
| ABBT40-EM-12-100 | ○ | 40 | 12 | 100 | 42 | - | 73 | M16 | 1.62 |
| ABBT40-EM-14-063 | ○ | 40 | 14 | 63 | 44 | - | 36 | M16 | 1.28 |
| ABBT40-EM-14-100 | ○ | 40 | 14 | 100 | 44 | - | 73 | M16 | 1.68 |
| ABBT40-EM-16-063 | ○ | 40 | 16 | 63 | 48 | - | 36 | M16 | 1.33 |
| ABBT40-EM-16-100 | ○ | 40 | 16 | 100 | 48 | - | 73 | M16 | 1.82 |
| ABBT40-EM-16-160 | ○ | 40 | 16 | 160 | 48 | - | 133 | M16 | 2.68 |
| ABBT40-EM-18-063 | ○ | 40 | 18 | 63 | 50 | - | 36 | M16 | 1.35 |
| ABBT40-EM-18-100 | ○ | 40 | 18 | 100 | 50 | - | 73 | M16 | 1.88 |
| ABBT40-EM-20-063 | ○ | 40 | 20 | 63 | 52 | - | 36 | M16 | 1.65 |
| ABBT40-EM-20-100 | ○ | 40 | 20 | 100 | 52 | - | 73 | M16 | 1.94 |
| ABBT40-EM-25-090 | ○ | 40 | 25 | 90 | 63 | 61 | 63 | M16 | 2.11 |
| ABBT40-EM-25-130 | ○ | 40 | 25 | 130 | 63 | 61 | 103 | M16 | 3.06 |
| ABBT40-EM-25-160 | ○ | 40 | 25 | 160 | 63 | 61 | 133 | M16 | 3.76 |
| ABBT40-EM-32-100 | ○ | 40 | 32 | 100 | 72 | 61 | 73 | M16 | 2.64 |
| ABBT40-EM-32-160 | ○ | 40 | 32 | 160 | 72 | 61 | 133 | M16 | 4.48 |
| ABBT40-EM-40-120 | ○ | 40 | 40 | 120 | 79 | 61 | 93 | M16 | 3.48 |

Sipariş Örneği/Ordering Example/*Bestellbeispiel*
1 ad./pcs./stück ABBT30-EM-06-050

● *Stokta / In Stock / Auf Lager* ○ *Stokta Yok / Non Stock Item / Kein Lagerartikel, Lieferzeit auf Anfrage*

**Yedek Parça** / *Spare Part* / *Ersatzteile*

*Veldon Sıkma Civatası DIN 1835 B*
*Clamping Screw Weldon DIN 1835 B*
*Weldon-Klemmschraube DIN 1835 B*

*Çektirme Civatası*
*Pull Stud*
*Anzugsbolzen*

*Daha fazla bilgi için, 56-71. sayfalara bakabilirsiniz. / For more info, you can check pages between 56-71. / Weitere Informationen finden Sie auf den Seiten 56–71.*

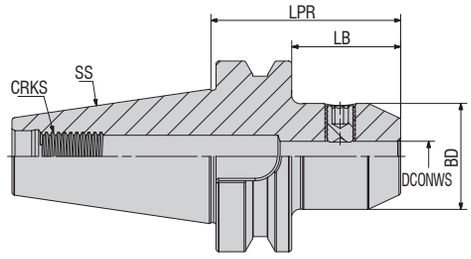


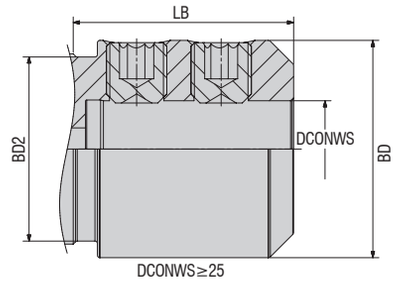


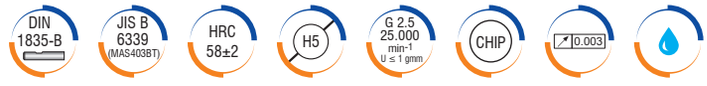


| Sipariş Kodu *Ordering Code* *Bestell-Bezeichnung* | Stok *Stock* *Lager* | Tutucu Ölçüleri (mm) *Dimension (mm)* *Abmessung (mm)* | | | | | | | |
|---|---|---|---|---|---|---|---|---|---|
| | | SS | DCONWS | LPR | BD | BD2 | LB | CRKS | KG |
| **ABBT50-EM-06-063** | ○ | 50 | 06 | 63 | 25 | - | 25 | M24 | 3.7 |
| **ABBT50-EM-06-100** | ○ | 50 | 06 | 100 | 25 | - | 62 | M24 | 3.83 |
| **ABBT50-EM-06-160** | ○ | 50 | 06 | 160 | 25 | - | 122 | M24 | 4.05 |
| **ABBT50-EM-08-063** | ○ | 50 | 08 | 63 | 28 | - | 25 | M24 | 3.72 |
| **ABBT50-EM-08-100** | ○ | 50 | 08 | 100 | 28 | - | 62 | M24 | 3.88 |
| **ABBT50-EM-10-100** | ○ | 50 | 10 | 100 | 35 | - | 62 | M24 | 3.99 |
| **ABBT50-EM-10-160** | ○ | 50 | 10 | 160 | 35 | - | 122 | M24 | 4.42 |
| **ABBT50-EM-12-080** | ○ | 50 | 12 | 80 | 42 | - | 42 | M24 | 3.97 |
| **ABBT50-EM-12-100** | ○ | 50 | 12 | 100 | 42 | - | 62 | M24 | 4.17 |
| **ABBT50-EM-12-160** | ○ | 50 | 12 | 160 | 42 | - | 122 | M24 | 4.8 |
| **ABBT50-EM-14-080** | ○ | 50 | 14 | 80 | 44 | - | 42 | M24 | 3.99 |
| **ABBT50-EM-14-100** | ○ | 50 | 14 | 100 | 44 | - | 62 | M24 | 4.2 |
| **ABBT50-EM-16-080** | ○ | 50 | 16 | 80 | 48 | - | 42 | M24 | 4.06 |
| **ABBT50-EM-16-100** | ○ | 50 | 16 | 100 | 48 | - | 62 | M24 | 4.33 |
| **ABBT50-EM-16-160** | ○ | 50 | 16 | 160 | 48 | - | 122 | M24 | 5.16 |
| **ABBT50-EM-18-100** | ○ | 50 | 18 | 100 | 50 | - | 62 | M24 | 4.38 |
| **ABBT50-EM-18-160** | ○ | 50 | 18 | 160 | 50 | - | 122 | M24 | 5.28 |
| **ABBT50-EM-20-100** | ○ | 50 | 20 | 100 | 52 | - | 62 | M24 | 4.42 |
| **ABBT50-EM-20-160** | ○ | 50 | 20 | 160 | 52 | - | 122 | M24 | 5.4 |
| **ABBT50-EM-25-100** | ○ | 50 | 25 | 100 | 63 | - | 62 | M24 | 4.76 |
| **ABBT50-EM-25-160** | ○ | 50 | 25 | 160 | 63 | - | 122 | M24 | 6.22 |
| **ABBT50-EM-32-105** | ○ | 50 | 32 | 105 | 72 | - | 67 | M24 | 5.18 |
| **ABBT50-EM-32-160** | ○ | 50 | 32 | 160 | 72 | - | 122 | M24 | 6.89 |
| **ABBT50-EM-40-110** | ○ | 50 | 40 | 110 | 80 | - | 72 | M24 | 5.49 |
| **ABBT50-EM-40-160** | ○ | 50 | 40 | 160 | 80 | - | 122 | M24 | 7.42 |

**Yedek Parça** / *Spare Part* / *Ersatzteile*

*Veldon Sıkma Civatası DIN 1835 B*
*Clamping Screw Weldon DIN 1835 B*
*Weldon-Klemmschraube DIN 1835 B*

*Çektirme Civatası*
*Pull Stud*
*Anzugsbolzen*

Sipariş Örneği/Ordering Example/*Bestellbeispiel*
1 ad./pcs./stück ABBT50-EM-06-063

● *Stokta / In Stock / Auf Lager* ○ *Stokta Yok / Non Stock Item / Kein Lagerartikel, Lieferzeit auf Anfrage*

*Daha fazla bilgi için, 56-71. sayfalara bakabilirsiniz. / For more info, you can check pages between 56-71. / Weitere Informationen finden Sie auf den Seiten 56–71.*

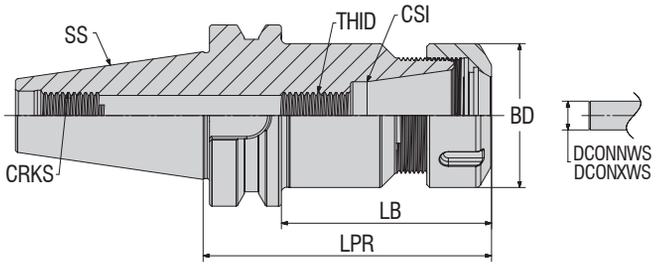


DIN ISO 15488 | JIS B 6339 (MAS403BT) | HRC 58±2 | G 2.5 25.000 min-1 U ≤ 1 gmm | CHIP | 0.003

| Sipariş Kodu *Ordering Code* *Bestell-Bezeichnung* | Stok *Stock* *Lager* | Tutucu Ölçüleri (mm) *Dimension (mm)* *Abmessung (mm)* | | | | | | | | | |
|---|---|---|---|---|---|---|---|---|---|---|---|
| | | SS | CSI | DCONNWS | DCONXWS | BD | LPR | LB | THID | CRKS | KG |
| **ABBT30-ER-16-070** | ○ | 30 | ER16 | 0.5 | 10 | 28 | 70 | 48 | M10 | M12 | 0.54 |
| **ABBT30-ER-16-100** | ○ | 30 | ER16 | 0.5 | 10 | 28 | 100 | 73 | M10 | M12 | 0.67 |
| **ABBT30-ER-25-070** | ○ | 30 | ER25 | 1.0 | 16 | 42 | 70 | 48 | M16 | M12 | 0.66 |
| **ABBT30-ER-25-100** | ○ | 30 | ER25 | 1.0 | 16 | 42 | 100 | 73 | M16 | M12 | 0.97 |
| **ABBT40-ER-16-063** | ○ | 40 | ER16 | 0.5 | 10 | 28 | 63 | 36 | M10 | M16 | 1.06 |
| **ABBT40-ER-16-100** | ○ | 40 | ER16 | 0.5 | 10 | 28 | 100 | 73 | M10 | M16 | 1.21 |
| **ABBT40-ER-16-130** | ○ | 40 | ER16 | 0.5 | 10 | 28 | 130 | 103 | M10 | M16 | 1.33 |
| **ABBT40-ER-25-060** | ○ | 40 | ER25 | 1.0 | 16 | 42 | 60 | 33 | M16 | M16 | 1.09 |
| **ABBT40-ER-25-100** | ○ | 40 | ER25 | 1.0 | 16 | 42 | 100 | 73 | M16 | M16 | 1.49 |
| **ABBT40-ER-25-130** | ○ | 40 | ER25 | 1.0 | 16 | 42 | 130 | 103 | M16 | M16 | 1.8 |
| **ABBT40-ER-32-070** | ○ | 40 | ER32 | 2.0 | 20 | 50 | 70 | 43 | M16 | M16 | 1.25 |
| **ABBT40-ER-32-100** | ○ | 40 | ER32 | 2.0 | 20 | 50 | 100 | 73 | M16 | M16 | 1.68 |
| **ABBT40-ER-32-160** | ○ | 40 | ER32 | 2.0 | 20 | 50 | 160 | 133 | M16 | M16 | 2.58 |
| **ABBT40-ER-40-080** | ○ | 40 | ER40 | 3.0 | 26 | 63 | 80 | 53 | M16 | M16 | 1.61 |
| **ABBT40-ER-40-100** | ○ | 40 | ER40 | 3.0 | 26 | 63 | 100 | 73 | M16 | M16 | 2.08 |
| **ABBT40-ER-40-160** | ○ | 40 | ER40 | 3.0 | 26 | 63 | 160 | 133 | M16 | M16 | 3.48 |
| **ABBT50-ER-16-070** | ○ | 50 | ER16 | 0.5 | 10 | 28 | 70 | 43 | M10 | M24 | 3.69 |
| **ABBT50-ER-16-100** | ○ | 50 | ER16 | 0.5 | 10 | 28 | 100 | 73 | M10 | M24 | 3.81 |
| **ABBT50-ER-16-160** | ○ | 50 | ER16 | 0.5 | 10 | 28 | 160 | 133 | M10 | M24 | 4.1 |
| **ABBT50-ER-25-070** | ○ | 50 | ER25 | 1.0 | 16 | 42 | 70 | 43 | M16 | M24 | 3.73 |
| **ABBT50-ER-25-100** | ○ | 50 | ER25 | 1.0 | 16 | 42 | 100 | 73 | M16 | M24 | 4.03 |
| **ABBT50-ER-25-160** | ○ | 50 | ER25 | 1.0 | 16 | 42 | 160 | 133 | M16 | M24 | 4.7 |
| **ABBT50-ER-32-070** | ○ | 50 | ER32 | 2.0 | 20 | 50 | 70 | 43 | M16 | M24 | 3.75 |
| **ABBT50-ER-32-100** | ○ | 50 | ER32 | 2.0 | 20 | 50 | 100 | 73 | M16 | M24 | 4.17 |
| **ABBT50-ER-32-130** | ○ | 50 | ER32 | 2.0 | 20 | 50 | 130 | 103 | M16 | M24 | 4.61 |
| **ABBT50-ER-32-160** | ○ | 50 | ER32 | 2.0 | 20 | 50 | 160 | 133 | M16 | M24 | 5.12 |
| **ABBT50-ER-40-080** | ○ | 50 | ER40 | 3.0 | 26 | 63 | 80 | 53 | M16 | M24 | 4 |
| **ABBT50-ER-40-100** | ○ | 50 | ER40 | 3.0 | 26 | 63 | 100 | 73 | M16 | M24 | 4.49 |
| **ABBT50-ER-40-160** | ○ | 50 | ER40 | 3.0 | 26 | 63 | 160 | 133 | M16 | M24 | 5.99 |

**Yedek Parça** / *Spare Part* / *Ersatzteile*

*ER Tipi Anahtar*
*Wrench ER*
*Spannschlüssel ER*

*Pensler ER DIN6499/ISO 15488-B*
*Collet Chuck ER DIN6499/ISO 15488-B*
*Spannschlüssel ER DIN6499/ISO 15488-B*

*Pens Kapağı*
*Clamping Nuts*
*Spannmutter*

*Çektirme Civatası*
*Pull Stud*
*Anzugsbolzen*

Sipariş Örneği/Ordering Example/*Bestellbeispiel*
1 ad./pcs./stück ABBT30-ER-16-070

*Daha fazla bilgi için, 56-71. sayfalara bakabilirsiniz. / For more info, you can check pages between 56-71. / Weitere Informationen finden Sie auf den Seiten 56–71.*

● *Stokta / In Stock / Auf Lager* ○ *Stokta Yok / Non Stock Item / Kein Lagerartikel, Lieferzeit auf Anfrage*

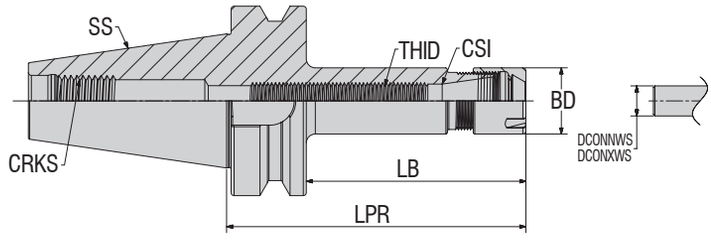


JIS B 6339 (MAS403BT) | HRC 58±2 | G 2.5 25.000 min-1 U ≤ 1 gmm | CHIP | 0.003

| Sipariş Kodu *Ordering Code* *Bestell-Bezeichnung* | Stok *Stock* *Lager* | Tutucu Ölçüleri (mm) *Dimension (mm)* *Abmessung (mm)* | | | | | | | | | |
|---|---|---|---|---|---|---|---|---|---|---|---|
| | | SS | CSI | DCONNWS | DCONXWS | BD | LPR | LB | THID | CRKS | KG |
| **ABBT40-ER-16-100-M** | ○ | 40 | ER16 | 0.5 | 10 | 22 | 100 | 73 | M10 | M16 | 1.11 |
| **ABBT40-ER-16-130-M** | ○ | 40 | ER16 | 0.5 | 10 | 22 | 130 | 103 | M10 | M16 | 1.19 |
| **ABBT50-ER-16-130-M** | ○ | 50 | ER16 | 0.5 | 10 | 22 | 130 | 92 | M10 | M24 | 3.81 |
| **ABBT50-ER-16-160-M** | ○ | 50 | ER16 | 0.5 | 10 | 22 | 160 | 122 | M10 | M24 | 3.93 |

**Yedek Parça** / *Spare Part* / *Ersatzteile*

Sipariş Örneği/Ordering Example/*Bestellbeispiel*
1 ad./pcs./stück ABBT40-ER-16-100-M

*ER Tipi Anahtar Mini (M)*
*Wrench ER Mini (M)*
*Spannschlüssel ER Mini (M)*

*Pensler ER DIN6499/ISO 15488-B*
*Collet Chuck ER DIN6499/ISO 15488-B*
*Spannschlüssel ER DIN6499/ISO 15488-B*

*Çektirme Civatası*
*Pull Stud*
*Anzugsbolzen*

*Pens Kapağı*
*Clamping Nuts*
*Spannmutter*

*Daha fazla bilgi için, 56-71. sayfalara bakabilirsiniz. / For more info, you can check pages between 56-71. / Weitere Informationen finden Sie auf den Seiten 56–71.*

● *Stokta / In Stock / Auf Lager* ○ *Stokta Yok / Non Stock Item / Kein Lagerartikel, Lieferzeit auf Anfrage*

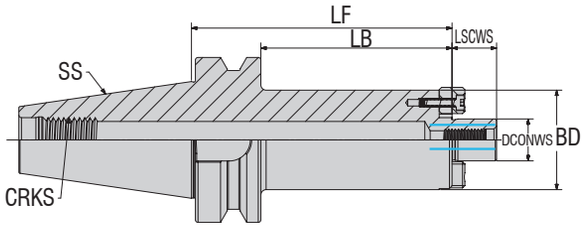


JIS B 6339 (MAS403BT) | HRC 58±2 | G 2.5 25.000 min-1 U ≤ 1 gmm | CHIP | g4 | 0.005

| Sipariş Kodu *Ordering Code* *Bestell-Bezeichnung* | Stok *Stock* *Lager* | Tutucu Ölçüleri (mm) *Dimension (mm)* *Abmessung (mm)* | | | | | | | |
|---|---|---|---|---|---|---|---|---|---|
| | | SS | DCONWS | LF | BD | LSCWS | LB | CRKS | KG |
| **ABBT30-FM-16-040** | ○ | 30 | 16 | 40 | 38 | 17 | 18 | M12 | 0.58 |
| **ABBT30-FM-22-040** | ○ | 30 | 22 | 40 | 48 | 19 | 18 | M12 | 0.7 |
| **ABBT30-FM-27-050** | ○ | 30 | 27 | 50 | 60 | 21.5 | 28 | M12 | 1.06 |
| **ABBT30-FM-32-050** | ○ | 30 | 32 | 50 | 78 | 24 | 28 | M12 | 1.46 |
| **ABBT40-FM-16-100** | ○ | 40 | 16 | 100 | 38 | 17 | 73 | M16 | 1.67 |
| **ABBT40-FM-22-100** | ○ | 40 | 22 | 100 | 48 | 19 | 73 | M16 | 2.1 |
| **ABBT40-FM-27-100** | ○ | 40 | 27 | 100 | 60 | 21.5 | 73 | M16 | 2.73 |
| **ABBT40-FM-32-100** | ○ | 40 | 32 | 100 | 78 | 24 | 73 | M16 | 3.79 |
| **ABBT50-FM-16-050** | ○ | 50 | 16 | 50 | 37 | 17 | 12 | M24 | 3.8 |
| **ABBT50-FM-16-100** | ○ | 50 | 16 | 100 | 38 | 17 | 62 | M24 | 4.25 |
| **ABBT50-FM-16-160** | ○ | 50 | 16 | 160 | 38 | 17 | 122 | M24 | 4.86 |
| **ABBT50-FM-22-055** | ○ | 50 | 22 | 55 | 48 | 19 | 17 | M24 | 3.98 |
| **ABBT50-FM-22-100** | ○ | 50 | 22 | 100 | 48 | 19 | 62 | M24 | 4.61 |
| **ABBT50-FM-22-160** | ○ | 50 | 22 | 160 | 48 | 19 | 122 | M24 | 5.57 |
| **ABBT50-FM-27-055** | ○ | 50 | 27 | 55 | 48 | 19 | 17 | M24 | 3.98 |
| **ABBT50-FM-27-100** | ○ | 50 | 27 | 100 | 60 | 21.5 | 62 | M24 | 5.17 |
| **ABBT50-FM-27-160** | ○ | 50 | 27 | 160 | 60 | 21.5 | 122 | M24 | 6.63 |
| **ABBT50-FM-32-100** | ○ | 50 | 32 | 100 | 78 | 24 | 62 | M24 | 6.2 |
| **ABBT50-FM-32-160** | ○ | 50 | 32 | 160 | 78 | 24 | 122 | M24 | 8.61 |
| **ABBT50-FM-40-100** | ○ | 50 | 40 | 100 | 88 | 27 | 62 | M24 | 6.91 |
| **ABBT50-FM-40-160** | ○ | 50 | 40 | 160 | 88 | 27 | 122 | M24 | 9.97 |
| **ABBT50-FM-60-080** | ○ | 50 | 60 | 80 | 128 | 40 | 42 | M24 | 8.02 |

**Yedek Parça** / *Spare Part* / *Ersatzteile*

Sipariş Örneği/Ordering Example/*Bestellbeispiel*
1 ad./pcs./stück ABBT30-FM-16-040

*Tarama Başlık Sıkma Civatası DIN 6367*
*Bolt For Shell Arbor DIN 6367*
*Scankopf-Klemmschraube DIN 6367*

*Tarama Başlık Civatası Sıkma Anahtarı DIN 6368*
*Wrench For Shell Arbor DIN 6368*
*Spannschlüssel DIN 6368 für Aufsteckdorne*

*Çektirme Civatası*
*Pull Stud*
*Anzugsbolzen*

*Alın Kamalı Malafa Kaması*
*Drive Key*
*Mitnehmersteine Mit Schraube*

*Daha fazla bilgi için, 56-71. sayfalara bakabilirsiniz. / For more info, you can check pages between 56-71. / Weitere Informationen finden Sie auf den Seiten 56–71.*

● *Stokta / In Stock / Auf Lager* ○ *Stokta Yok / Non Stock Item / Kein Lagerartikel, Lieferzeit auf Anfrage*

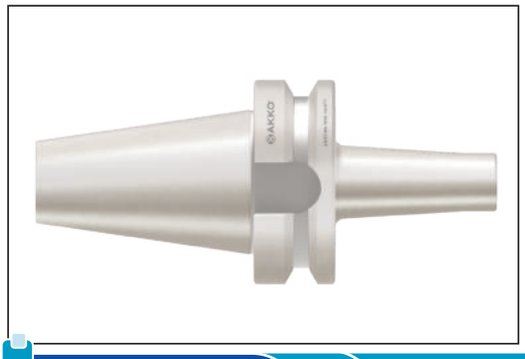

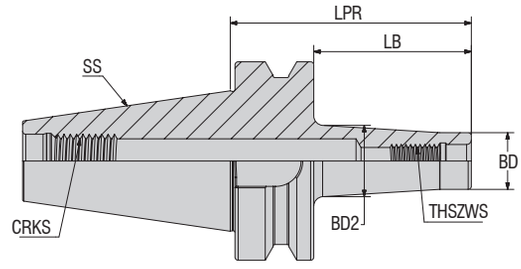


JIS B 6339 (MAS403BT) | HRC 58±2 | G 2.5 25.000 min-1 U ≤ 1 gmm | CHIP | g4 | 0.003

| Sipariş Kodu *Ordering Code* *Bestell-Bezeichnung* | Stok *Stock* *Lager* | Tutucu Ölçüleri (mm) *Dimension (mm)* *Abmessung (mm)* | | | | | | | |
|---|---|---|---|---|---|---|---|---|---|
| | | SS | THSZW | BD | BD2 | LPR | LB | CRKS | KG |
| **ABBT40-MM-08-052** | ○ | 40 | M8 | 13 | 15 | 52 | 25 | M16 | 0.96 |
| **ABBT40-MM-08-077** | ○ | 40 | M8 | 13 | 22.5 | 77 | 50 | M16 | 1.02 |
| **ABBT40-MM-08-102** | ○ | 40 | M8 | 13 | 23 | 102 | 75 | M16 | 1.07 |
| **ABBT40-MM-08-127** | ○ | 40 | M8 | 13 | 25 | 127 | 100 | M16 | 1.14 |
| **ABBT40-MM-10-052** | ○ | 40 | M10 | 18 | 20 | 52 | 25 | M16 | 0.98 |
| **ABBT40-MM-10-077** | ○ | 40 | M10 | 18 | 23 | 77 | 50 | M16 | 1.05 |
| **ABBT40-MM-10-102** | ○ | 40 | M10 | 18 | 28 | 102 | 75 | M16 | 1.16 |
| **ABBT40-MM-10-127** | ○ | 40 | M10 | 18 | 32 | 127 | 100 | M16 | 1.29 |
| **ABBT40-MM-12-052** | ○ | 40 | M12 | 21 | 24 | 52 | 25 | M16 | 1 |
| **ABBT40-MM-12-077** | ○ | 40 | M12 | 21 | 24 | 77 | 50 | M16 | 1.06 |
| **ABBT40-MM-12-102** | ○ | 40 | M12 | 21 | 31 | 102 | 75 | M16 | 1.21 |
| **ABBT40-MM-12-127** | ○ | 40 | M12 | 21 | 32.5 | 127 | 100 | M16 | 1.35 |
| **ABBT40-MM-12-177** | ○ | 40 | M12 | 21 | 39.5 | 177 | 150 | M16 | 1.76 |
| **ABBT40-MM-16-052** | ○ | 40 | M16 | 29 | - | 52 | 25 | M16 | 1.03 |
| **ABBT40-MM-16-077** | ○ | 40 | M16 | 29 | 34 | 77 | 50 | M16 | 1.18 |
| **ABBT40-MM-16-102** | ○ | 40 | M16 | 29 | 34 | 102 | 75 | M16 | 1.33 |
| **ABBT40-MM-16-127** | ○ | 40 | M16 | 29 | 36 | 127 | 100 | M16 | 1.52 |
| **ABBT40-MM-16-152** | ○ | 40 | M16 | 29 | 40 | 152 | 125 | M16 | 1.78 |
| **ABBT40-MM-16-177** | ○ | 40 | M16 | 29 | 42.5 | 177 | 150 | M16 | 2.04 |
| **ABBT50-MM-08-138** | ○ | 50 | M8 | 13 | 24.5 | 138 | 100 | M24 | 3.78 |
| **ABBT50-MM-08-188** | ○ | 50 | M8 | 13 | 29.5 | 188 | 150 | M24 | 3.97 |
| **ABBT50-MM-10-088** | ○ | 50 | M10 | 18 | 23 | 88 | 50 | M24 | 3.68 |
| **ABBT50-MM-10-138** | ○ | 50 | M10 | 18 | 31.5 | 138 | 100 | M24 | 3.92 |
| **ABBT50-MM-10-188** | ○ | 50 | M10 | 18 | 36 | 188 | 150 | M24 | 4.15 |
| **ABBT50-MM-12-088** | ○ | 50 | M12 | 21 | 24 | 88 | 50 | M24 | 3.7 |
| **ABBT50-MM-12-138** | ○ | 50 | M12 | 21 | 32.5 | 138 | 100 | M24 | 3.97 |
| **ABBT50-MM-12-188** | ○ | 50 | M12 | 21 | 39.5 | 188 | 150 | M24 | 4.38 |
| **ABBT50-MM-16-088** | ○ | 50 | M16 | 29 | 34 | 88 | 50 | M24 | 3.82 |
| **ABBT50-MM-16-138** | ○ | 50 | M16 | 29 | 36 | 138 | 100 | M24 | 4.15 |
| **ABBT50-MM-16-188** | ○ | 50 | M16 | 29 | 42.5 | 188 | 150 | M24 | 4.66 |

**Yedek Parça** / *Spare Part* / *Ersatzteile*

*Çektirme Civatası*
*Pull Stud*
*Anzugsbolzen*

Sipariş Örneği/Ordering Example/*Bestellbeispiel*
1 ad./pcs./stück ABBT40-MM-08-052

*Daha fazla bilgi için, 56-71. sayfalara bakabilirsiniz. / For more info, you can check pages between 56-71. / Weitere Informationen finden Sie auf den Seiten 56–71.*

● *Stokta / In Stock / Auf Lager* ○ *Stokta Yok / Non Stock Item / Kein Lagerartikel, Lieferzeit auf Anfrage*

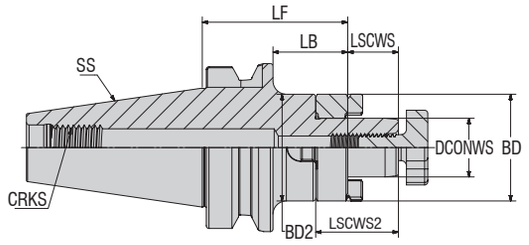


JIS B 6339 (MAS403BT) | HRC 58±2 | G 2.5 25.000 min-1 U ≤ 1 gmm | CHIP | g4 | 0.005

| Sipariş Kodu *Ordering Code* *Bestell-Bezeichnung* | Stok *Stock* *Lager* | Tutucu Ölçüleri (mm) *Dimension (mm)* *Abmessung (mm)* | | | | | | | | | |
|---|---|---|---|---|---|---|---|---|---|---|---|
| | | SS | DCONWS | LF | BD | BD2 | LSCWS | LSCWS2 | LB | CRKS | KG |
| ABBT30-FMC-16-045 | ○ | 30 | 16 | 45 | 32 | - | 17 | 27 | 23 | M12 | 0.56 |
| ABBT30-FMC-22-047 | ○ | 30 | 22 | 47 | 40 | - | 19 | 31 | 25 | M12 | 0.7 |
| ABBT30-FMC-27-049 | ○ | 30 | 27 | 49 | 48 | - | 21 | 33.5 | 27 | M12 | 0.87 |
| ABBT30-FMC-32-052 | ○ | 30 | 32 | 52 | 58 | - | 24 | 38 | 30 | M12 | 1.12 |
| ABBT40-FMC-16-055 | ○ | 40 | 16 | 55 | 32 | - | 17 | 27 | 28 | M16 | 1.17 |
| ABBT40-FMC-16-100 | ○ | 40 | 16 | 100 | 32 | - | 17 | 27 | 73 | M16 | 1.43 |
| ABBT40-FMC-16-160 | ○ | 40 | 16 | 160 | 32 | 38 | 17 | 27 | 133 | M16 | 1.87 |
| ABBT40-FMC-22-055 | ○ | 40 | 22 | 55 | 40 | - | 19 | 31 | 28 | M16 | 1.28 |
| ABBT40-FMC-22-100 | ○ | 40 | 22 | 100 | 40 | - | 19 | 31 | 73 | M16 | 1.68 |
| ABBT40-FMC-27-055 | ○ | 40 | 27 | 55 | 48 | - | 21 | 33.5 | 28 | M16 | 1.44 |
| ABBT40-FMC-27-100 | ○ | 40 | 27 | 100 | 48 | - | 21 | 33.5 | 73 | M16 | 2.04 |
| ABBT40-FMC-32-060 | ○ | 40 | 32 | 60 | 58 | - | 24 | 38 | 33 | M16 | 1.8 |
| ABBT40-FMC-32-100 | ○ | 40 | 32 | 100 | 58 | - | 24 | 38 | 73 | M16 | 2.59 |
| ABBT40-FMC-40-060 | ○ | 40 | 40 | 60 | 70 | - | 27 | 41 | 33 | M16 | 2.19 |
| ABBT50-FMC-16-070 | ○ | 50 | 16 | 70 | 32 | - | 17 | 27 | 32 | M24 | 3.85 |
| ABBT50-FMC-16-100 | ○ | 50 | 16 | 100 | 32 | - | 17 | 27 | 62 | M24 | 4.03 |
| ABBT50-FMC-16-130 | ○ | 50 | 16 | 130 | 32 | - | 17 | 27 | 92 | M24 | 4.2 |
| ABBT50-FMC-16-160 | ○ | 50 | 16 | 160 | 32 | 37 | 17 | 27 | 122 | M24 | 4.43 |
| ABBT50-FMC-22-070 | ○ | 50 | 22 | 70 | 40 | - | 19 | 31 | 32 | M24 | 3.97 |
| ABBT50-FMC-22-100 | ○ | 50 | 22 | 100 | 40 | - | 19 | 31 | 62 | M24 | 4.23 |
| ABBT50-FMC-22-130 | ○ | 50 | 22 | 130 | 40 | - | 19 | 31 | 92 | M24 | 4.5 |
| ABBT50-FMC-22-160 | ○ | 50 | 22 | 160 | 40 | 45.5 | 19 | 31 | 122 | M24 | 4.84 |
| ABBT50-FMC-27-070 | ○ | 50 | 27 | 70 | 48 | - | 21 | 33.5 | 32 | M24 | 4.15 |
| ABBT50-FMC-27-100 | ○ | 50 | 27 | 100 | 48 | - | 21 | 33.5 | 62 | M24 | 4.55 |
| ABBT50-FMC-27-130 | ○ | 50 | 27 | 130 | 48 | - | 21 | 33.5 | 92 | M24 | 4.95 |
| ABBT50-FMC-27-160 | ○ | 50 | 27 | 160 | 48 | 53.5 | 21 | 33.5 | 122 | M24 | 5.44 |
| ABBT50-FMC-32-070 | ○ | 50 | 32 | 70 | 58 | - | 24 | 38 | 32 | M24 | 4.43 |
| ABBT50-FMC-32-100 | ○ | 50 | 32 | 100 | 58 | - | 24 | 38 | 62 | M24 | 5.03 |
| ABBT50-FMC-32-130 | ○ | 50 | 32 | 130 | 58 | - | 24 | 38 | 92 | M24 | 5.62 |
| ABBT50-FMC-32-160 | ○ | 50 | 32 | 160 | 58 | 64 | 24 | 38 | 122 | M24 | 6.34 |
| ABBT50-FMC-40-070 | ○ | 50 | 40 | 70 | 70 | - | 27 | 41 | 32 | M24 | 4.88 |
| ABBT50-FMC-40-100 | ○ | 50 | 40 | 100 | 70 | - | 27 | 41 | 62 | M24 | 5.76 |
| ABBT50-FMC-40-130 | ○ | 50 | 40 | 130 | 70 | - | 27 | 41 | 92 | M24 | 6.64 |
| ABBT50-FMC-40-160 | ○ | 50 | 40 | 160 | 70 | 76 | 27 | 41 | 122 | M24 | 7.68 |

● *Stokta / In Stock / Auf Lager* ○ *Stokta Yok / Non Stock Item / Kein Lagerartikel, Lieferzeit auf Anfrage*

Sipariş Örneği/Ordering Example/*Bestellbeispiel*
1 ad./pcs./stück ABBT30-FMC-16-045

**Yedek Parça** / *Spare Part* / *Ersatzteile*

*Tarama Başlık Sıkma Civatası DIN 6367*
*Bolt For Shell Arbor DIN 6367*
*Scankopf-Klemmschraube DIN 6367*

*Tarama Başlık Civatası Sıkma Anahtarı DIN 6368*
*Wrench For Shell Arbor DIN 6368*
*Spannschlüssel DIN 6368 für Aufsteckdorne*

*Çektirme Civatası*
*Pull Stud*
*Anzugsbolzen*

*Tırnaklı Pul DIN 6366*
*Clutch Drive Rings To DIN 6366*
*Mitnehmerringe DIN 6366*

*Kama DIN 6885*
*Drive Key DIN 6885*
*Paßfeder DIN 6885*

*Daha fazla bilgi için, 56-71. sayfalara bakabilirsiniz. / For more info, you can check pages between 56-71. / Weitere Informationen finden Sie auf den Seiten 56-71.*

# SK TUTUCULAR

## *SK HOLDERS*

## *SK HALTER*

Teknik çizim ve fotoğraflar değişkenlik gösterebilir.
Illustrations shown may vary from actual product.
*Das Produkt kann von dem gezeigten Bild abweichen.*

AKKO®

konuşulan
the spoken kalite...
quality...

www.akko.com.tr

| 1 | 2 | 3 | 4 | 5 |
|---|---|---|---|---|
| A | SK40 | EM | 06 | 080 |
| AKKO | GÖVDE TİPİ / SHANK TYPE / KÖRPERTYP | FORMU / FORM / FORM | ÇAP / DIAMETER / DURCHMESSER | TUTUCU BOY / HOLDER SIZE / HALTER GRÖSSE |

**SK** 40

**EM** : **VELDON ŞAFTLI TAKIM TUTUCULAR** / END MILL HOLDER / *FRÄSERAUFNAHMEN*
**ER** : **ER SIKMA PENSLİ TAKIM TUTUCULAR** / COLLET CHUCKS (ER) / *SPANNFUTTER ER*
**FM** : **YÜZEY FREZE TAKIM TUTUCULAR** / SHELL MILL HOLDERS / *AUFSTECKFRÄSERDORNE*

## KALİTE KONTROL
## QUALITY CONTROL
## QUALITÄTSKONTROLLE

SK 40

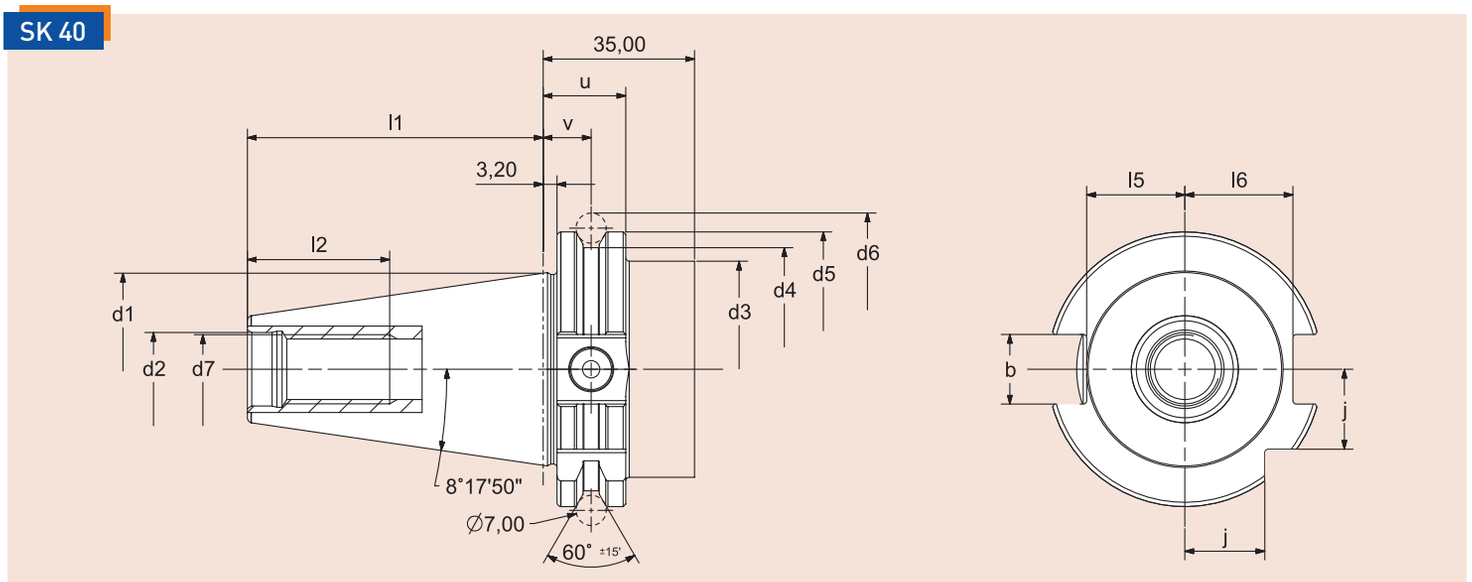


***Tasarım:***
- *Konik açısı: 8° 17'50" + 4"*
- *Takım tutucular, yüzeyi sertleştirilmiş 58 ± 2 HRC*
- *Çekirdekte çekme dayanımı en az 950 N/mm2*
- *AT3 tolerans kalitesinde koniklik*
- *Dahili veri çipi için çap Ø 10 mm*

***Design:***
- *Angle of cone: 8° 17'50" + 4"*
- *Tool holders case-hardened 58 ± 2 HRC*
- *Tensile strength in the core at least 950 N/mm2*
- *Taper in tolerance quality AT3*
- *Incl. bore for data chip Ø 10 mm*

***Ausführung:***
- *Kegelwinkel: 8° 17'50" + 4"*
- *Aufnahmen einsatzgehärtet 58 ± 2 HRC*
- *Zugfestigkeit im Kern mindestens 950 N/mm2*
- *Steilkegel in Kegelwinkel-Toleranzqualität AT3*
- *Inkl. Codeträgerbohrung Ø 10 mm*

| SK | d1 | d2 H7 | d3 max. | d4 0.0 -0.05 | d5 0.0 -0.1 | d6 ±0.05 | d7 6H | u 0.0 -0.1 | v ±0.1 | l1 0.0 -0.3 | l2 min. | l5 0.0 -0.3 | l6 0.0 -0.3 | b 0.2 0.0 | j 0.2 -0.3 |
|---|---|---|---|---|---|---|---|---|---|---|---|---|---|---|---|
| SK40 | 44.45 | 17 | 50 | 56.25 | 63.55 | 72.30 | X16x2 | 19.1 | 11.1 | 68.4 | 32 | 22.7 | 25 | 16.1 | 18.5 |

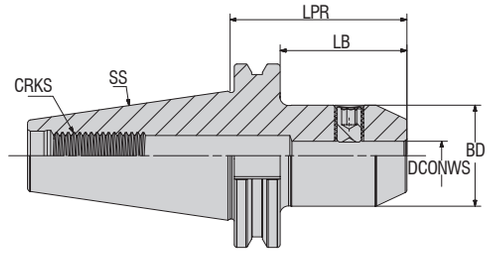


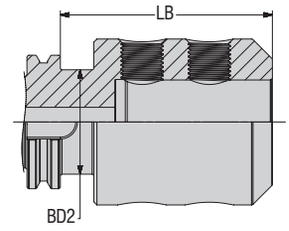


FORM AD | DIN 69871 | DIN 6359-B | DIN 1835-B | HRC 58±2 | H5 | G 2.5 25.000 min-1 U ≤ 1 gmm | CHIP | 0.003

| Sipariş Kodu *Ordering Code* *Bestell-Bezeichnung* | Stok *Stock* *Lager* | Tutucu Ölçüleri (mm) *Dimension (mm)* *Abmessung (mm)* | | | | | | | |
|---|---|---|---|---|---|---|---|---|---|
| | | SS | DCONWS | LPR | BD | BD2 | LB | CRKS | KG |
| **ASK40-EM-08-050** | ● | 40 | 08 | 50 | 28 | - | 30.9 | M16 | 0.93 |
| **ASK40-EM-10-063** | ● | 40 | 10 | 63 | 35 | - | 43.9 | M16 | 1.23 |
| **ASK40-EM-12-050** | ● | 40 | 12 | 50 | 42 | - | 30.9 | M16 | 1.05 |
| **ASK40-EM-12-100** | ● | 40 | 12 | 100 | 42 | - | 80.9 | M16 | 1.55 |
| **ASK40-EM-12-063** | ● | 40 | 12 | 63 | 42 | - | 43.9 | M16 | 1.31 |
| **ASK40-EM-16-063** | ● | 40 | 16 | 63 | 42 | - | 43.9 | M16 | 1.31 |
| **ASK40-EM-16-100** | ● | 40 | 16 | 100 | 48 | - | 80.9 | M16 | 1.77 |
| **ASK40-EM-20-063** | ● | 40 | 20 | 63 | 52 | 49.7 | 43.9 | M16 | 1.31 |
| **ASK40-EM-20-100** | ● | 40 | 20 | 100 | 52 | 49.7 | 80.9 | M16 | 1.88 |
| **ASK40-EM-25-090** | ● | 40 | 25 | 90 | 63 | 49.7 | 80.9 | M16 | 2.2 |
| **ASK40-EM-32-100** | ● | 40 | 32 | 100 | 72 | 49.7 | 80.9 | M16 | 2.55 |
| **ASK40-EM-40-120** | ● | 40 | 40 | 120 | 79 | 49.7 | 100.9 | M16 | 3.42 |

**Yedek Parça** / *Spare Part* / *Ersatzteile*

Sipariş Örneği/Ordering Example/*Bestellbeispiel*
1 ad./pcs./stück ASK40-EM-08-050

*Veldon Sıkma Civatası DIN 1835 B*
*Clamping Screw Weldon DIN 1835 B*
*Weldon-Klemmschraube DIN 1835 B*

*Çektirme Civatası*
*Pull Stud*
*Anzugsbolzen*

● *Stokta / In Stock / Auf Lager* ○ *Stokta Yok / Non Stock Item / Kein Lagerartikel, Lieferzeit auf Anfrage*

*Daha fazla bilgi için, 56-71. sayfalara bakabilirsiniz. / For more info, you can check pages between 56-71. / Weitere Informationen finden Sie auf den Seiten 56–71.*

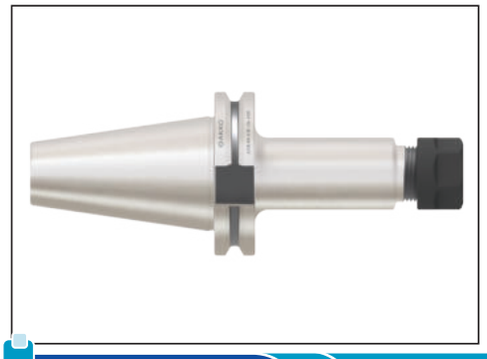

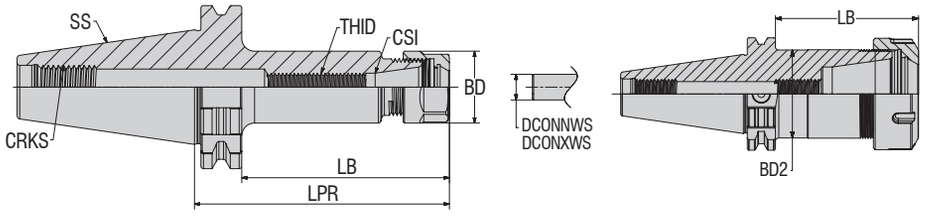


FORM AD | DIN 69871 | DIN ISO 15488 | HRC 58±2 | G 2.5 25.000 min-1 U ≤ 1 gmm | CHIP | 0.003

| Sipariş Kodu *Ordering Code* *Bestell-Bezeichnung* | Stok *Stock* *Lager* | Tutucu Ölçüleri (mm) *Dimension (mm)* *Abmessung (mm)* | | | | | | | | | | |
|---|---|---|---|---|---|---|---|---|---|---|---|---|
| | | SS | CSI | DCONNWS | DCONXWS | BD | BD2 | LPR | LB | THID | CRKS | KG |
| **ASK40-ER-16-063** | ● | 40 | ER16 | 0.5 | 10 | 28 | - | 63 | 43.9 | M10 | M16 | 0.94 |
| **ASK40-ER-25-060** | ● | 40 | ER25 | 1.0 | 16 | 42 | - | 60 | 40.9 | M16 | M16 | 1.02 |
| **ASK40-ER-25-100** | ● | 40 | ER25 | 1.0 | 16 | 42 | - | 100 | 80.9 | M16 | M16 | 1.42 |
| **ASK40-ER-32-070** | ● | 40 | ER32 | 2.0 | 20 | 50 | 49.7 | 70 | 50.9 | M16 | M16 | 1.21 |
| **ASK40-ER-32-100** | ● | 40 | ER32 | 2.0 | 20 | 50 | 49.7 | 100 | 80.9 | M16 | M16 | 1.64 |
| **ASK40-ER-32-160** | ● | 40 | ER32 | 2.0 | 20 | 50 | 49.7 | 160 | 140.9 | M16 | M16 | 2.5 |
| **ASK40-ER-40-080** | ● | 40 | ER40 | 3.0 | 26 | 63 | 49.7 | 80 | 60.9 | M16 | M16 | 1.43 |
| **ASK40-ER-40-100** | ● | 40 | ER40 | 3.0 | 26 | 63 | 49.7 | 100 | 80.9 | M16 | M16 | 1.72 |
| **ASK40-ER-40-160** | ● | 40 | ER40 | 3.0 | 26 | 63 | 49.7 | 160 | 140.9 | M16 | M16 | 2.58 |

**Yedek Parça** / *Spare Part* / *Ersatzteile*

*ER Tipi Anahtar*
*Wrench ER*
*Spannschlüssel ER*

*Pensler ER DIN6499/ISO 15488-B*
*Collet Chuck ER DIN6499/ISO 15488-B*
*Spannschlüssel ER DIN6499/ISO 15488-B*

*Pens Kapağı*
*Clamping Nuts*
*Spannmutter*

*Çektirme Civatası*
*Pull Stud*
*Anzugsbolzen*

*Daha fazla bilgi için, 56-71. sayfalara bakabilirsiniz. / For more info, you can check pages between 56-71. / Weitere Informationen finden Sie auf den Seiten 56–71.*

## DIN ISO 7388-1 (SK DIN 69871) / SK YÜZEY FREZE TAKIM TUTUCULAR
## *DIN ISO 7388-1 (SK DIN 69871) / SK SHELL MILL HOLDER*
## *DIN ISO 7388-1 (SK DIN 69871) / SK AUFSTECKFRÄSERDORNE*

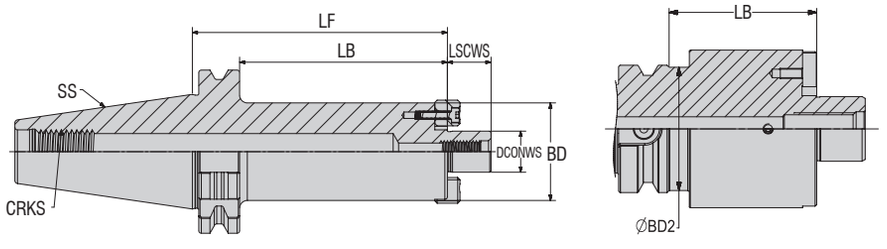


FORM AD | DIN 69871 | ISO 3937-2 | HRC 58±2 | G 2.5 25.000 min-1 U ≤ 1 gmm | CHIP | g4 | 0.005

| Sipariş Kodu *Ordering Code* *Bestell-Bezeichnung* | Stok *Stock* *Lager* | Tutucu Ölçüleri (mm) *Dimension (mm)* *Abmessung (mm)* | | | | | | | | |
|---|---|---|---|---|---|---|---|---|---|---|
| | | SS | DCONWS | BD | BD2 | LF | LSCWS | LB | CRKS | KG |
| **ASK40-FM-16-055** | ● | 40 | 16 | 38 | - | 55 | 17 | 35.9 | M16 | 1.21 |
| **ASK40-FM-16-100** | ● | 40 | 16 | 38 | - | 100 | 17 | 80.9 | M16 | 1.59 |
| **ASK40-FM-22-055** | ● | 40 | 22 | 48 | - | 55 | 19 | 35.9 | M16 | 1.35 |
| **ASK40-FM-27-055** | ● | 40 | 27 | 60 | 49.7 | 55 | 21.5 | 35.9 | M16 | 1.62 |
| **ASK40-FM-32-060** | ● | 40 | 32 | 78 | 49.7 | 60 | 24 | 40.9 | M16 | 2.02 |
| **ASK40-FM-40-060** | ● | 40 | 40 | 88 | 49.7 | 60 | 27 | 40.9 | M16 | 2.26 |

**Yedek Parça** / *Spare Part* / *Ersatzteile*

Sipariş Örneği/Ordering Example/*Bestellbeispiel* 1 ad./pcs./stück ASK40-ER-16-063

*Tarama Başlık Sıkma Civatası DIN 6367*
*Bolt For Shell Arbor DIN 6367*
*Scankopf-Klemmschraube DIN 6367*

*Tarama Başlık Civatası Sıkma Anahtarı DIN 6368*
*Wrench For Shell Arbor DIN 6368*
*Spannschlüssel DIN 6368 für Aufsteckdorne*

*Çektirme Civatası*
*Pull Stud*
*Anzugsbolzen*

*Alın Kamalı Malafa Kaması*
*Drive Key*
*Mitnehmersteine Mit Schraube*

*Daha fazla bilgi için, 56-71. sayfalara bakabilirsiniz. / For more info, you can check pages between 56-71. / Weitere Informationen finden Sie auf den Seiten 56–71.*

● *Stokta / In Stock / Auf Lager* ○ *Stokta Yok / Non Stock Item / Kein Lagerartikel, Lieferzeit auf Anfrage*

# HSK TUTUCULAR

## *HSK HOLDERS*

## *HSK HALTER*

Teknik çizim ve fotoğraflar değişkenlik gösterebilir.
Illustrations shown may vary from actual product.
*Das Produkt kann von dem gezeigten Bild abweichen.*

AKKO®

konuşulan
the spoken kalite...
quality...

www.akko.com.tr

| 1 | 2 | 3 | 4 | 5 |
|---|---|---|---|---|
| A | HSK63 | EM | 06 | 080 |
| AKKO | GÖVDE TİPİ / SHANK TYPE / KÖRPERTYP | FORMU / FORM / FORM | ÇAP / DIAMETER / DURCHMESSER | TUTUCU BOY / HOLDER SIZE / HALTER GRÖSSE |

**HSK** 32-40-50-63-80-100

**EM** : **VELDON ŞAFTLI TAKIM TUTUCULAR** / END MILL HOLDER / *FRÄSERAUFNAHMEN*
**ER** : **ER SIKMA PENSLİ TAKIM TUTUCULAR** / COLLET CHUCKS (ER) / *SPANNFUTTER ER*
**FM** : **YÜZEY FREZE TAKIM TUTUCULAR** / SHELL MILL HOLDERS / *AUFSTECKFRÄSERDORNE*
**MM** : **MODÜLER PARMAK FREZE TUTUCULAR** / MILLING CUTTER ARBORS FOR SCREW-ON TYPE MILLING CUTTERS / *MODULARE SCHAFTFRÄSERHALTER*
**FMC** : **KOMBİNE YÜZEY FREZE TAKIM TUTUCULARI** / COMBI SHELL MILL HOLDER / *KOMBINIERTE FLÄCHENFRÄSHALTER*
**BL41**: **BLANK TUTUCULAR** / BLANK HOLDERS / *BLANK HALTER*

## KALİTE KONTROL
## QUALITY CONTROL
## QUALITÄTSKONTROLLE

**HSK** **HSK** 32-40-50-63-80-100

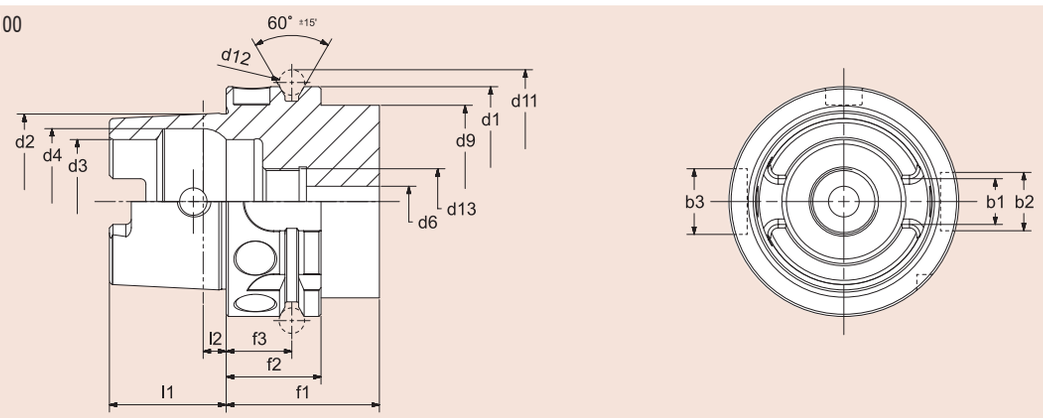


***ST'ye kıyasla HSK'nın sahip olduğu avantajlar şu şekildedir:***
*– Takımları spindl'a bağlarken yüksek oranda tekrarlanabilir doğruluk*
*– Düz temas yüzeyli sabit eksenel konumlandırma*
*– Yüksek hızlı kesime uygun*
*– Çekme saplaması gerekmez*
*– Dahili veri çipi için delik (yalnızca HSK-A)*
***Malzeme:***
*– Yüksek gerilimli parçalar için özel yüzey sertleştirme çeliği*
*– Yüzey sertliği: 58 ± 2 HRC*
*– Çekirdekte çekme dayanımı min. 950 N/mm2*

***Compared to the steep taper the HSK has the following advantages:***
*– Highly repeatable accuracy when clamping tools into spindle*
*– Fixed axial positioning with flat contact surface*
*– Suitable for high speed cutting*
*– No pull stud necessary*
*– Incl. bore for data chip (only HSK-A)*
***Material:***
*– Special case-hardening steel for highly stressed parts*
*– Surface hardness: 58 ± 2 HRC*
*– Tensile strength in core min. 950 N/mm2*

***Gegenüber dem Steilkegel hat die HSK-Schnittstelle folgende Vorteile:***
*– Hohe Wiederholgenauigkeit beim Einwechselnvon Werkzeugen*
*– Feste axiale Positionierung durch Plananlage*
*– Eignung für hohe Drehzahlen*
*– Kein Anzugsbolzen notwendig*
*– Inkl. Codeträgerbohrung (nur HSK-A)*
***Werkstoff:***
*– Spezieller Einsatzstahl für hoch beanspruchte Bauteile*
*– Oberflächenhärte: 58 ± 2 HRC*
*– Zugfestigkeit im Kern mind. 1000 N/mm2*

| HSK-A | d1 h10 | d2 | d3 H10 | d4 H11 | d6 max | d9 max | d11 0 −0.1 | d12 | d13 | l1 0 −0.2 | l2 | b1 0.04 −0.04 | b2 H10 | b3 H10 | f1 0 −0.1 | f2 min. | f3 ±0.1 |
|---|---|---|---|---|---|---|---|---|---|---|---|---|---|---|---|---|---|
| 32 | 32 | 24.007 | 17 | 20.5 | 4.2 | 26 | 37 | 4 | M10x1 | 16 | 3.2 | 7.05 | 7 | 9 | 20 | 35 | 16 |
| 40 | 40 | 30.007 | 21 | 25.5 | 5 | 34 | 45 | 4 | M12x1 | 20 | 4 | 8.05 | 9 | 11 | 20 | 35 | 16 |
| 50 | 50 | 38.008 | 26 | 32 | 6.8 | 42 | 59.3 | 7 | M16x1 | 25 | 5 | 10.54 | 12 | 14 | 26 | 42 | 18 |
| 63 | 63 | 48.010 | 34 | 40 | 8.4 | 53 | 72.3 | 7 | M18x1 | 32 | 6.3 | 12.54 | 16 | 18 | 26 | 42 | 18 |
| 80 | 80 | 60.012 | 42 | 50 | 10.2 | 68 | 88.8 | 7 | M20x1.5 | 40 | 8 | 16.04 | 18 | 20 | 26 | 42 | 18 |
| 100 | 100 | 75.013 | 53 | 63 | 12 | 88 | 109.75 | 7 | M24x1.5 | 50 | 10 | 20.02 | 20 | 22 | 29 | 45 | 20 |

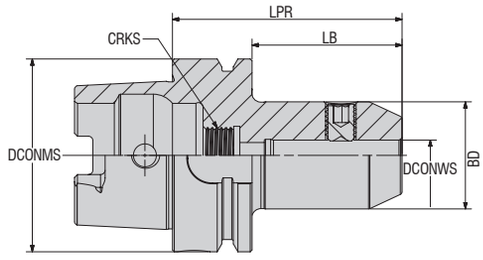


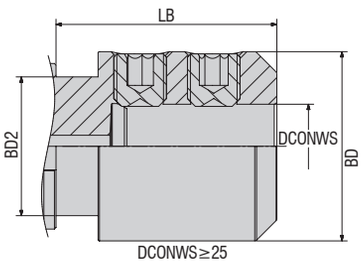


DIN 69893-1 FORM A | DIN 69882-4 | DIN 1835-B | HRC 58±2 | H5 | G 2.5 25.000 min-1 U ≤ 1 gmm | CHIP | 0.003

| Sipariş Kodu *Ordering Code* *Bestell-Bezeichnung* | Stok *Stock* *Lager* | Tutucu Ölçüleri (mm) *Dimension (mm)* *Abmessung (mm)* | | | | | | | |
|---|---|---|---|---|---|---|---|---|---|
| | | DCONMS | DCONWS | LPR | BD | BD2 | LB | CRKS | KG |
| **AHSKA32-EM-06-060** | ● | 32 | 06 | 60 | 25 | - | 40 | M10x1 | 0.25 |
| **AHSKA32-EM-08-060** | ● | 32 | 08 | 60 | 28 | 25 | 40 | M10x1 | 0.27 |
| **AHSKA32-EM-10-065** | ● | 32 | 10 | 65 | 34 | 25 | 45 | M10x1 | 0.35 |
| **AHSKA32-EM-12-065** | ● | 32 | 12 | 65 | 42 | 25 | 45 | M10x1 | 0.42 |
| **AHSKA40-EM-06-060** | ● | 40 | 06 | 60 | 25 | - | 40 | M12x1 | 0.32 |
| **AHSKA40-EM-08-060** | ● | 40 | 08 | 60 | 28 | - | 40 | M12x1 | 0.36 |
| **AHSKA40-EM-10-060** | ● | 40 | 10 | 60 | 35 | 32.6 | 40 | M12x1 | 0.43 |
| **AHSKA40-EM-12-070** | ● | 40 | 12 | 70 | 42 | 32.6 | 50 | M12x1 | 0.59 |
| **AHSKA40-EM-16-075** | ● | 40 | 16 | 75 | 48 | 32.6 | 55 | M12x1 | 0.72 |
| **AHSKA50-EM-06-065** | ● | 50 | 06 | 65 | 25 | - | 39 | M16x1 | 0.51 |
| **AHSKA50-EM-08-065** | ● | 50 | 08 | 65 | 28 | - | 39 | M16x1 | 0.55 |
| **AHSKA50-EM-10-065** | ● | 50 | 10 | 65 | 35 | - | 39 | M16x1 | 0.63 |
| **AHSKA50-EM-12-080** | ● | 50 | 12 | 80 | 42 | 41.6 | 54 | M16x1 | 0.88 |
| **AHSKA50-EM-14-080** | ● | 50 | 14 | 80 | 44 | 41.6 | 54 | M16x1 | 0.9 |
| **AHSKA50-EM-16-080** | ● | 50 | 16 | 80 | 48 | 41.6 | 54 | M16x1 | 0.96 |
| **AHSKA50-EM-18-080** | ● | 50 | 18 | 80 | 50 | 41.6 | 54 | M16x1 | 0.98 |
| **AHSKA50-EM-20-080** | ● | 50 | 20 | 80 | 52 | 41.6 | 54 | M16x1 | 0.99 |
| **AHSKA63-EM-06-065** | ● | 63 | 06 | 65 | 25 | - | 39 | M18x1 | 0.76 |
| **AHSKA63-EM-06-075** | ● | 63 | 06 | 75 | 25 | - | 49 | M18x1 | 0.82 |
| **AHSKA63-EM-06-100** | ● | 63 | 06 | 100 | 25 | - | 74 | M18x1 | 0.88 |
| **AHSKA63-EM-06-160** | ● | 63 | 06 | 160 | 25 | - | 134 | M18x1 | 1.12 |
| **AHSKA63-EM-08-075** | ● | 63 | 08 | 75 | 28 | - | 49 | M18x1 | 0.85 |
| **AHSKA63-EM-08-100** | ● | 63 | 08 | 100 | 28 | - | 74 | M18x1 | 0.95 |
| **AHSKA63-EM-08-160** | ● | 63 | 08 | 160 | 28 | - | 134 | M18x1 | 1.26 |
| **AHSKA63-EM-10-075** | ● | 63 | 10 | 75 | 35 | - | 49 | M18x1 | 0.98 |
| **AHSKA63-EM-10-100** | ● | 63 | 10 | 100 | 35 | - | 74 | M18x1 | 1.13 |
| **AHSKA63-EM-10-160** | ○ | 63 | 10 | 160 | 35 | - | 134 | M18x1 | 1.61 |
| **AHSKA63-EM-12-080** | ○ | 63 | 12 | 80 | 42 | - | 54 | M18x1 | 1.14 |
| **AHSKA63-EM-12-130** | ● | 63 | 12 | 130 | 42 | - | 104 | M18x1 | 1.66 |
| **AHSKA63-EM-12-160** | ○ | 63 | 12 | 160 | 42 | - | 134 | M18x1 | 2.03 |
| **AHSKA63-EM-14-080** | ● | 63 | 14 | 80 | 44 | - | 54 | M18x1 | 1.18 |
| **AHSKA63-EM-14-130** | ● | 63 | 14 | 130 | 44 | - | 104 | M18x1 | 1.75 |
| **AHSKA63-EM-16-080** | ● | 63 | 16 | 80 | 48 | - | 54 | M18x1 | 1.27 |
| **AHSKA63-EM-16-130** | ● | 63 | 16 | 130 | 48 | - | 104 | M18x1 | 1.95 |
| **AHSKA63-EM-16-160** | ● | 63 | 16 | 160 | 48 | - | 134 | M18x1 | 2.36 |

**Yedek Parça** / *Spare Part* / *Ersatzteile*

*Veldon Sıkma Civatası DIN 1835 B*
*Clamping Screw Weldon DIN 1835 B*
*Weldon-Klemmschraube DIN 1835 B*

*Soğutma Suyu Ünitesi*
*Cooling Tubes*
*Kühlmitteleinheit*

*Soğutma Suyu Ünitesi Anahtarı*
*Wrench For Delivery Unit For Coolant*
*Schlüssel Für Kühlmittelübergabeeinheit*

Sipariş Örneği/Ordering Example/*Bestellbeispiel*
1 ad./pcs./stück AHSKA32-EM-06-060

*Daha fazla bilgi için, 56-71. sayfalara bakabilirsiniz. / For more info, you can check pages between 56-71. / Weitere Informationen finden Sie auf den Seiten 56-71.*

● *Stokta / In Stock / Auf Lager* ○ *Stokta Yok / Non Stock Item / Kein Lagerartikel, Lieferzeit auf Anfrage*

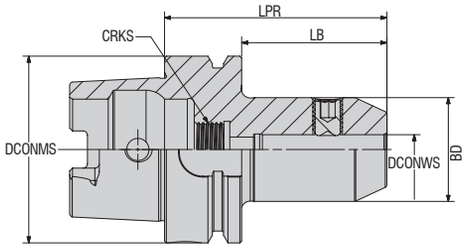


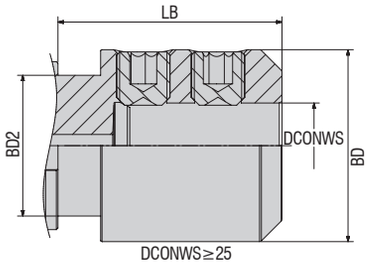


DIN 69893-1 FORM A | DIN 69882-4 | DIN 1835-B | HRC 58±2 | H5 | G 2.5 25.000 min-1 U ≤ 1 gmm | CHIP | 0.003

| Sipariş Kodu *Ordering Code* *Bestell-Bezeichnung* | Stok *Stock* *Lager* | Tutucu Ölçüleri (mm) *Dimension (mm)* *Abmessung (mm)* | | | | | | | |
|---|---|---|---|---|---|---|---|---|---|
| | | DCONMS | DCONWS | LPR | BD | BD2 | LB | CRKS | KG |
| AHSKA63-EM-18-080 | ● | 63 | 18 | 80 | 50 | - | 54 | M18x1 | 1.31 |
| AHSKA63-EM-20-080 | ● | 63 | 20 | 80 | 52 | - | 54 | M18x1 | 1.34 |
| AHSKA63-EM-20-130 | ● | 63 | 20 | 130 | 52 | - | 104 | M18x1 | 2.14 |
| AHSKA63-EM-20-160 | ● | 63 | 20 | 160 | 52 | - | 134 | M18x1 | 2.63 |
| AHSKA63-EM-25-110 | ● | 63 | 25 | 110 | 63 | 52.8 | 84 | M18x1 | 2.22 |
| AHSKA63-EM-32-110 | ● | 63 | 32 | 110 | 72 | 52.8 | 84 | M18x1 | 2.53 |
| AHSKA80-EM-06-080 | ● | 80 | 06 | 80 | 25 | - | 54 | M20x1.5 | 1.26 |
| AHSKA80-EM-08-080 | ● | 80 | 08 | 80 | 28 | - | 54 | M20x1.5 | 1.32 |
| AHSKA80-EM-10-080 | ● | 80 | 10 | 80 | 35 | - | 54 | M20x1.5 | 1.43 |
| AHSKA80-EM-12-080 | ● | 80 | 12 | 80 | 42 | - | 54 | M20x1.5 | 1.58 |
| AHSKA80-EM-14-080 | ● | 80 | 14 | 80 | 44 | - | 54 | M20x1.5 | 1.61 |
| AHSKA80-EM-16-100 | ● | 80 | 16 | 100 | 48 | - | 74 | M20x1.5 | 1.98 |
| AHSKA80-EM-18-100 | ● | 80 | 18 | 100 | 50 | - | 74 | M20x1.5 | 2.04 |
| AHSKA80-EM-20-100 | ● | 80 | 20 | 100 | 52 | - | 74 | M20x1.5 | 2.1 |
| AHSKA80-EM-25-100 | ● | 80 | 25 | 100 | 63 | - | 74 | M20x1.5 | 2.53 |
| AHSKA80-EM-32-110 | ● | 80 | 32 | 110 | 72 | 67.6 | 84 | M20x1.5 | 3.14 |
| AHSKA100-EM-06-080 | ● | 100 | 06 | 80 | 25 | - | 51 | M24x1.5 | 2.16 |
| AHSKA100-EM-06-160 | ● | 100 | 06 | 160 | 25 | - | 131 | M24x1.5 | 2.46 |
| AHSKA100-EM-08-080 | ● | 100 | 08 | 80 | 28 | - | 51 | M24x1.5 | 2.21 |
| AHSKA100-EM-08-160 | ● | 100 | 08 | 160 | 28 | - | 131 | M24x1.5 | 2.59 |
| AHSKA100-EM-10-080 | ● | 100 | 10 | 80 | 35 | - | 51 | M24x1.5 | 2.31 |
| AHSKA100-EM-10-160 | ● | 100 | 10 | 160 | 35 | - | 131 | M24x1.5 | 2.88 |
| AHSKA100-EM-12-080 | ● | 100 | 12 | 80 | 42 | - | 51 | M24x1.5 | 2.45 |
| AHSKA100-EM-12-160 | ● | 100 | 12 | 160 | 42 | - | 131 | M24x1.5 | 3.3 |
| AHSKA100-EM-14-080 | ● | 100 | 14 | 80 | 44 | - | 51 | M24x1.5 | 2.49 |
| AHSKA100-EM-14-160 | ● | 100 | 14 | 160 | 44 | - | 131 | M24x1.5 | 3.42 |
| AHSKA100-EM-16-100 | ● | 100 | 16 | 100 | 48 | - | 71 | M24x1.5 | 2.84 |
| AHSKA100-EM-16-160 | ● | 100 | 16 | 160 | 48 | - | 131 | M24x1.5 | 3.7 |
| AHSKA100-EM-18-100 | ● | 100 | 18 | 100 | 50 | - | 71 | M24x1.5 | 2.9 |
| AHSKA100-EM-18-160 | ● | 100 | 18 | 160 | 50 | - | 131 | M24x1.5 | 3.83 |
| AHSKA100-EM-20-100 | ● | 100 | 20 | 100 | 52 | - | 71 | M24x1.5 | 2.95 |
| AHSKA100-EM-20-160 | ● | 100 | 20 | 160 | 52 | - | 131 | M24x1.5 | 3.96 |
| AHSKA100-EM-25-100 | ● | 100 | 25 | 100 | 63 | - | 71 | M24x1.5 | 3.37 |
| AHSKA100-EM-25-160 | ● | 100 | 25 | 160 | 63 | - | 131 | M24x1.5 | 4.85 |
| AHSKA100-EM-32-100 | ● | 100 | 32 | 100 | 72 | - | 71 | M24x1.5 | 3.71 |
| AHSKA100-EM-32-160 | ● | 100 | 32 | 160 | 72 | - | 131 | M24x1.5 | 5.56 |
| AHSKA100-EM-40-105 | ● | 100 | 40 | 105 | 80 | - | 76 | M24x1.5 | 4.1 |
| AHSKA100-EM-40-160 | ● | 100 | 40 | 160 | 80 | - | 131 | M24x1.5 | 6.15 |

**Yedek Parça** / *Spare Part* *Ersatzteile*

*Veldon Sıkma Civatası DIN 1835 B*
*Clamping Screw Weldon DIN 1835 B*
*Weldon-Klemmschraube DIN 1835 B*

*Soğutma Suyu Ünitesi*
*Cooling Tubes*
*Kühlmitteleinheit*

*Soğutma Suyu Ünitesi Anahtarı*
*Wrench For Delivery Unit For Coolant*
*Schlüssel Für Kühlmittelübergabeeinheit*

Sipariş Örneği/Ordering Example/*Bestellbeispiel*
1 ad./pcs./stück AHSKA63-EM-18-080

*Daha fazla bilgi için, 56-71. sayfalara bakabilirsiniz. / For more info, you can check pages between 56-71. / Weitere Informationen finden Sie auf den Seiten 56–71.*

● *Stokta / In Stock / Auf Lager* ○ *Stokta Yok / Non Stock Item / Kein Lagerartikel, Lieferzeit auf Anfrage*

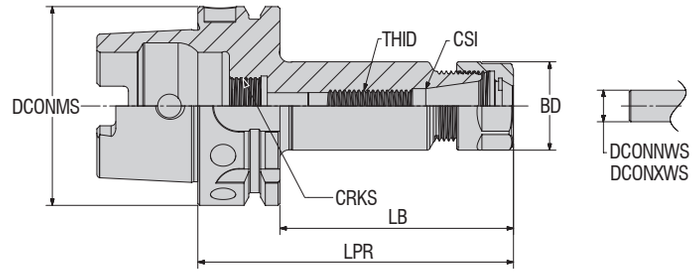


DIN 69893-1 FORM A | DIN 69882-6 | DIN ISO 15488 | HRC 58±2 | H5 | G 2.5 25.000 min-1 U ≤ 1 gmm | CHIP | 0.003

| Sipariş Kodu *Ordering Code* *Bestell-Bezeichnung* | Stok *Stock* *Lager* | Tutucu Ölçüleri (mm) *Dimension (mm)* *Abmessung (mm)* | | | | | | | | | |
|---|---|---|---|---|---|---|---|---|---|---|---|
| | | DCONMS | CSI | DCONNWS | DCONXWS | BD | LPR | LB | THID | CRKS | KG |
| AHSKA32-ER-16-080 | ● | 32 | ER16 | 0.5 | 10 | 28 | 80 | 48 | M10 | M10x1 | 0.31 |
| AHSKA32-ER-25-080 | ● | 32 | ER25 | 1.0 | 16 | 42 | 80 | 48 | M16 | M10x1 | 0.38 |
| AHSKA40-ER-16-060 | ● | 40 | ER16 | 0.5 | 10 | 28 | 60 | 40 | M10 | M12x1 | 0.35 |
| AHSKA40-ER-25-060 | ● | 40 | ER25 | 1.0 | 16 | 42 | 60 | 40 | M16 | M12x1 | 0.43 |
| AHSKA40-ER-32-100 | ● | 40 | ER32 | 2.0 | 20 | 50 | 100 | 80 | M16 | M12x1 | 0.73 |
| AHSKA50-ER-16-100 | ● | 50 | ER16 | 0.5 | 10 | 28 | 100 | 74 | M10 | M16x1 | 0.66 |
| AHSKA50-ER-25-100 | ● | 50 | ER25 | 1.0 | 16 | 42 | 100 | 74 | M16 | M16x1 | 0.94 |
| AHSKA50-ER-32-100 | ● | 50 | ER32 | 2.0 | 20 | 50 | 100 | 74 | M16 | M16x1 | 0.91 |
| AHSKA63-ER-16-075 | ● | 63 | ER16 | 0.5 | 10 | 28 | 75 | 49 | M10 | M18x1 | 0.83 |
| AHSKA63-ER-16-100 | ● | 63 | ER16 | 0.5 | 10 | 28 | 100 | 74 | M10 | M18x1 | 0.92 |
| AHSKA63-ER-16-160 | ● | 63 | ER16 | 0.5 | 10 | 28 | 160 | 134 | M10 | M18x1 | 1.2 |
| AHSKA63-ER-25-100 | ● | 63 | ER25 | 1.0 | 16 | 42 | 100 | 74 | M16 | M18x1 | 1.2 |
| AHSKA63-ER-25-160 | ● | 63 | ER25 | 1.0 | 16 | 42 | 160 | 134 | M16 | M18x1 | 1.85 |
| AHSKA63-ER-32-075 | ● | 63 | ER32 | 2.0 | 20 | 50 | 75 | 49 | M16 | M18x1 | 1.23 |
| AHSKA63-ER-32-100 | ● | 63 | ER32 | 2.0 | 20 | 50 | 100 | 74 | M16 | M18x1 | 1.39 |
| AHSKA63-ER-32-160 | ● | 63 | ER32 | 2.0 | 20 | 50 | 160 | 134 | M16 | M18x1 | 2.28 |
| AHSKA63-ER-40-085 | ○ | 63 | ER40 | 3.0 | 26 | 63 | 85 | 59 | M16 | M18x1 | 1.42 |
| AHSKA63-ER-40-100 | ● | 63 | ER40 | 3.0 | 26 | 63 | 100 | 74 | M16 | M18x1 | 1.46 |
| AHSKA63-ER-40-160 | ● | 63 | ER40 | 3.0 | 26 | 63 | 160 | 134 | M16 | M18x1 | 2.36 |
| AHSKA80-ER-32-100 | ● | 80 | ER32 | 2.0 | 20 | 50 | 100 | 74 | M16 | M20x1.5 | 1.83 |
| AHSKA80-ER-40-120 | ● | 80 | ER40 | 3.0 | 26 | 63 | 120 | 94 | M16 | M20x1.5 | 2.72 |
| AHSKA100-ER-16-100 | ● | 100 | ER16 | 0.5 | 10 | 28 | 100 | 71 | M10 | M24x1.5 | 2.25 |
| AHSKA100-ER-16-160 | ● | 100 | ER16 | 0.5 | 10 | 28 | 160 | 131 | M10 | M24x1.5 | 2.51 |
| AHSKA100-ER-25-100 | ● | 100 | ER25 | 1.0 | 16 | 42 | 100 | 71 | M16 | M24x1.5 | 2.51 |
| AHSKA100-ER-25-160 | ● | 100 | ER25 | 1.0 | 16 | 42 | 160 | 131 | M16 | M24x1.5 | 3.14 |
| AHSKA100-ER-32-100 | ● | 100 | ER32 | 2.0 | 20 | 50 | 100 | 71 | M16 | M24x1.5 | 2.7 |
| AHSKA100-ER-32-160 | ● | 100 | ER32 | 2.0 | 20 | 50 | 160 | 131 | M16 | M24x1.5 | 3.59 |
| AHSKA100-ER-40-120 | ● | 100 | ER40 | 3.0 | 26 | 63 | 120 | 91 | M16 | M24x1.5 | 3.56 |
| AHSKA100-ER-40-160 | ● | 100 | ER40 | 3.0 | 26 | 63 | 160 | 131 | M16 | M24x1.5 | 4.53 |

**Yedek Parça** / *Spare Part* / *Ersatzteile*

*ER Tipi Anahtar*
*Wrench ER*
*Spannschlüssel ER*

*Pensler ER DIN6499/ISO 15488-B*
*Collet Chuck ER DIN6499/ISO 15488-B*
*Spannschlüssel ER DIN6499/ISO 15488-B*

*Pens Kapağı*
*Clamping Nuts*
*Spannmutter*

*Soğutma Suyu Ünitesi*
*Cooling Tubes*
*Kühlmitteleinheit*

*Soğutma Suyu Ünitesi Anahtarı*
*Wrench For Delivery Unit For Coolant*
*Schlüssel Für Kühlmittelübergabeeinheit*

*Daha fazla bilgi için, 56-71. sayfalara bakabilirsiniz. / For more info, you can check pages between 56-71. / Weitere Informationen finden Sie auf den Seiten 56–71.*

Sipariş Örneği/Ordering Example/*Bestellbeispiel*
1 ad./pcs./stück AHSKA32-ER-16-080

● *Stokta / In Stock / Auf Lager* ○ *Stokta Yok / Non Stock Item / Kein Lagerartikel, Lieferzeit auf Anfrage*

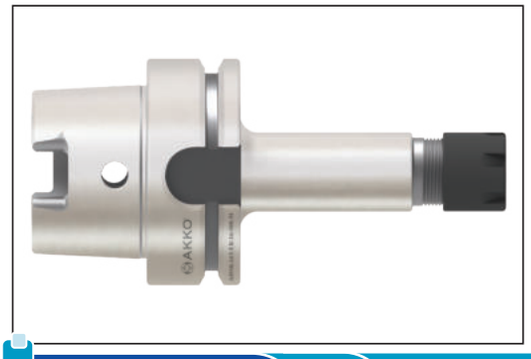

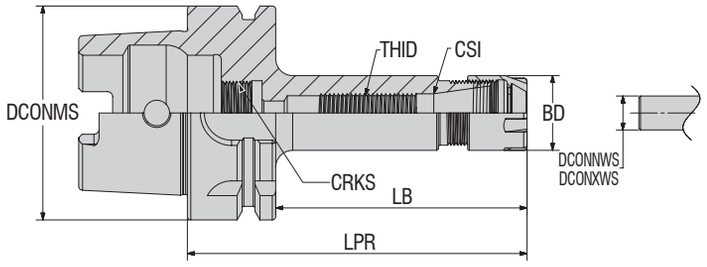


DIN 69893-1 FORM A | HRC 58±2 | G 2.5 25.000 min-1 u ≤ 1 gmm | CHIP | 0.003

| Sipariş Kodu *Ordering Code* *Bestell-Bezeichnung* | Stok *Stock* *Lager* | Tutucu Ölçüleri (mm) *Dimension (mm)* *Abmessung (mm)* | | | | | | | | | |
|---|---|---|---|---|---|---|---|---|---|---|---|
| | | DCONMS | CSI | DCONNWS | DCONXWS | BD | LPR | LB | THID | CRKS | KG |
| **AHSKA50-ER-16-100-M** | ● | 50 | ER16 | 0.5 | 10 | 22 | 100 | 74 | M10 | M16x1 | 0.65 |
| **AHSKA63-ER-16-100-M** | ● | 63 | ER16 | 0.5 | 10 | 22 | 100 | 74 | M10 | M18x1 | 0.79 |
| **AHSKA63-ER-16-160-M** | ● | 63 | ER16 | 0.5 | 10 | 22 | 160 | 74 | M10 | M18x1 | 0.97 |

**Yedek Parça** / *Spare Part* / *Ersatzteile*

Sipariş Örneği/Ordering Example/*Bestellbeispiel*
1 ad./pcs./stück AHSKA50-ER-16-100-M

*ER Tipi Anahtar Mini (M)*
*Wrench ER Mini (M)*
*Spannschlüssel ER Mini (M)*

*Pensler ER DIN6499/ISO 15488-B*
*Collet Chuck ER DIN6499/ISO 15488-B*
*Spannschlüssel ER DIN6499/ISO 15488-B*

*Pens Kapağı*
*Clamping Nuts*
*Spannmutter*

*Soğutma Suyu Ünitesi*
*Cooling Tubes*
*Kühlmitteleinheit*

*Soğutma Suyu Ünitesi Anahtarı*
*Wrench For Delivery Unit For Coolant*
*Schlüssel Für Kühlmittelübergabeeinheit*

*Daha fazla bilgi için, 56-71. sayfalara bakabilirsiniz. / For more info, you can check pages between 56-71. / Weitere Informationen finden Sie auf den Seiten 56–71.*

● *Stokta / In Stock / Auf Lager* ○ *Stokta Yok / Non Stock Item / Kein Lagerartikel, Lieferzeit auf Anfrage*

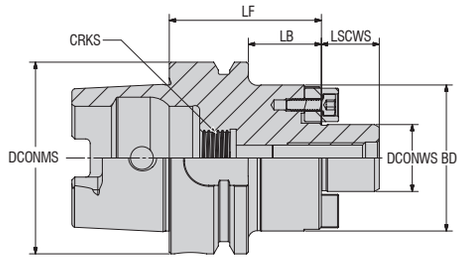


DIN 69893-1 FORM A | ISO 3937-3 | HRC 58±2 | G 2.5 25.000 min-1 U ≤ 1 gmm | g4 | CHIP | 0.005

| Sipariş Kodu *Ordering Code* *Bestell-Bezeichnung* | Stok *Stock* *Lager* | Tutucu Ölçüleri (mm) *Dimension (mm)* *Abmessung (mm)* | | | | | | | |
|---|---|---|---|---|---|---|---|---|---|
| | | DCONMS | DCONWS | BD | LF | LSCWS | LB | CRKS | KG |
| AHSKA50-FM-16-050 | ● | 50 | 16 | 38 | 50 | 17 | 24 | M16x1 | 0.63 |
| AHSKA50-FM-16-100 | ● | 50 | 16 | 38 | 100 | 17 | 74 | M16x1 | 0.98 |
| AHSKA50-FM-22-060 | ● | 50 | 22 | 48 | 60 | 19 | 34 | M16x1 | 0.88 |
| AHSKA50-FM-22-100 | ● | 50 | 22 | 48 | 100 | 19 | 74 | M16x1 | 1.23 |
| AHSKA50-FM-27-060 | ● | 50 | 27 | 60 | 60 | 21.5 | 34 | M16x1 | 1.06 |
| AHSKA50-FM-32-060 | ● | 50 | 32 | 78 | 60 | 24 | 34 | M16x1 | 1.43 |
| AHSKA63-FM-16-050 | ● | 63 | 16 | 38 | 50 | 17 | 24 | M18x1 | 0.89 |
| AHSKA63-FM-16-100 | ● | 63 | 16 | 38 | 100 | 17 | 74 | M18x1 | 1.31 |
| AHSKA63-FM-22-050 | ● | 63 | 22 | 48 | 50 | 19 | 24 | M18x1 | 1.05 |
| AHSKA63-FM-22-100 | ● | 63 | 22 | 48 | 100 | 19 | 74 | M18x1 | 1.73 |
| AHSKA63-FM-27-060 | ● | 63 | 27 | 60 | 60 | 21.5 | 34 | M18x1 | 1.43 |
| AHSKA63-FM-27-100 | ● | 63 | 27 | 60 | 100 | 21.5 | 74 | M18x1 | 2.29 |
| AHSKA63-FM-32-060 | ● | 63 | 32 | 78 | 60 | 24 | 34 | M18x1 | 1.76 |
| AHSKA63-FM-32-100 | ● | 63 | 32 | 78 | 100 | 24 | 74 | M18x1 | 2.61 |
| AHSKA80-FM-22-100 | ● | 80 | 22 | 48 | 100 | 19 | 74 | M20x1.5 | 2.17 |
| AHSKA80-FM-27-100 | ● | 80 | 27 | 60 | 100 | 21.5 | 74 | M20x1.5 | 2.81 |
| AHSKA80-FM-32-100 | ● | 80 | 32 | 78 | 100 | 24 | 74 | M20x1.5 | 3.87 |
| AHSKA80-FM-40-100 | ● | 80 | 40 | 88 | 100 | 27 | 74 | M20x1.5 | 4.09 |
| AHSKA100-FM-16-160 | ○ | 100 | 16 | 38 | 160 | 17 | 131 | M24x1.5 | 3.24 |
| AHSKA100-FM-22-100 | ● | 100 | 22 | 48 | 100 | 19 | 71 | M24x1.5 | 3.02 |
| AHSKA100-FM-22-160 | ○ | 100 | 22 | 48 | 160 | 19 | 131 | M24x1.5 | 3.96 |
| AHSKA100-FM-27-100 | ● | 100 | 27 | 60 | 100 | 21.5 | 71 | M24x1.5 | 3.64 |
| AHSKA100-FM-27-160 | ○ | 100 | 27 | 60 | 160 | 21.5 | 131 | M24x1.5 | 5.07 |
| AHSKA100-FM-32-100 | ● | 100 | 32 | 78 | 100 | 24 | 71 | M24x1.5 | 4.8 |
| AHSKA100-FM-32-160 | ○ | 100 | 32 | 78 | 160 | 24 | 131 | M24x1.5 | 7.21 |
| AHSKA100-FM-40-100 | ● | 100 | 40 | 88 | 100 | 27 | 71 | M24x1.5 | 5.58 |
| AHSKA100-FM-40-160 | ○ | 100 | 40 | 88 | 160 | 27 | 131 | M24x1.5 | 8.37 |

**Yedek Parça** / *Spare Part* / *Ersatzteile*

*Tarama Başlık Sıkma Civatası DIN 6367*
*Bolt For Shell Arbor DIN 6367*
*Scankopf-Klemmschraube DIN 6367*

*Tarama Başlık Civatası Sıkma Anahtarı DIN 6368*
*Wrench For Shell Arbor DIN 6368*
*Spannschlüssel DIN 6368 für Aufsteckdorne*

*Alın Kamalı Malafa Kaması*
*Drive Key*
*Mitnehmersteine Mit Schraube*

*Soğutma Suyu Ünitesi Anahtarı*
*Wrench For Delivery Unit For Coolant*
*Schlüssel Für Kühlmittelübergabeeinheit*

*Soğutma Suyu Ünitesi*
*Cooling Tubes*
*Kühlmitteleinheit*

*Daha fazla bilgi için, 56-71. sayfalara bakabilirsiniz. / For more info, you can check pages between 56-71. / Weitere Informationen finden Sie auf den Seiten 56–71.*

Sipariş Örneği/Ordering Example/*Bestellbeispiel*
1 ad./pcs./stück AHSKA50-FM-16-050

● *Stokta / In Stock / Auf Lager* ○ *Stokta Yok / Non Stock Item / Kein Lagerartikel, Lieferzeit auf Anfrage*

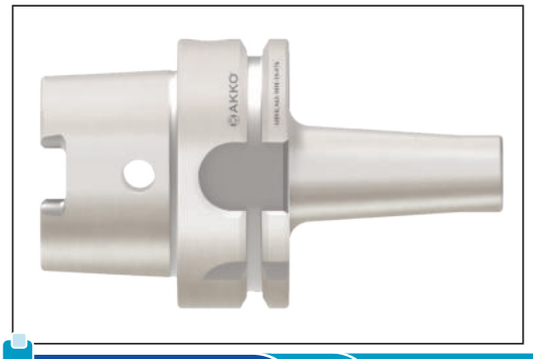

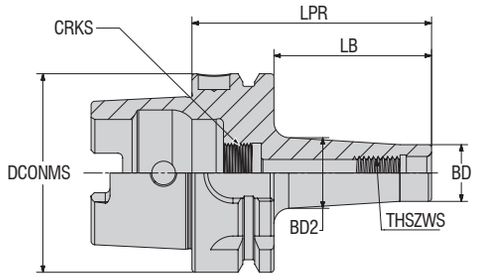


DIN 69893-1 FORM A | HRC 58±2 | G 2.5 25.000 min-1 u ≤ 1 gmm | CHIP | 0.003

| Sipariş Kodu *Ordering Code* *Bestell-Bezeichnung* | Stok *Stock* *Lager* | Tutucu Ölçüleri (mm) *Dimension (mm)* *Abmessung (mm)* | | | | | | | |
|---|---|---|---|---|---|---|---|---|---|
| | | DCONMS | THSZWS | BD | BD2 | LPR | LB | CRKS | KG |
| **AHSKA63-MM-10-076** | ○ | 63 | M10 | 18 | 23 | 76 | 50 | M18x1 | 0.74 |
| **AHSKA63-MM-10-126** | ○ | 63 | M10 | 18 | 32 | 126 | 100 | M18x1 | 0.99 |
| **AHSKA63-MM-10-176** | ○ | 63 | M10 | 18 | 36 | 176 | 150 | M18x1 | 1.29 |
| **AHSKA63-MM-12-076** | ○ | 63 | M12 | 21 | 24 | 76 | 50 | M18x1 | 0.76 |
| **AHSKA63-MM-12-101** | ○ | 63 | M12 | 21 | 31 | 101 | 75 | M18x1 | 0.91 |
| **AHSKA63-MM-12-126** | ○ | 63 | M12 | 21 | 33 | 126 | 100 | M18x1 | 1.04 |
| **AHSKA63-MM-12-176** | ○ | 63 | M12 | 21 | 39.5 | 176 | 150 | M18x1 | 1.46 |
| **AHSKA63-MM-16-076** | ○ | 63 | M16 | 29 | 34 | 76 | 50 | M18x1 | 0.88 |
| **AHSKA63-MM-16-101** | ○ | 63 | M16 | 29 | 34 | 101 | 75 | M18x1 | 1.03 |
| **AHSKA63-MM-16-126** | ○ | 63 | M16 | 29 | 36 | 126 | 100 | M18x1 | 1.21 |
| **AHSKA63-MM-16-176** | ○ | 63 | M16 | 29 | 42.5 | 176 | 150 | M18x1 | 1.73 |
| **AHSKA100-MM-10-079** | ○ | 100 | M10 | 18 | 21.5 | 79 | 50 | M24x1.5 | 2.12 |
| **AHSKA100-MM-10-129** | ○ | 100 | M10 | 18 | 31 | 129 | 100 | M24x1.5 | 2.34 |
| **AHSKA100-MM-10-179** | ○ | 100 | M10 | 18 | 35.5 | 179 | 150 | M24x1.5 | 2.64 |
| **AHSKA100-MM-12-079** | ○ | 100 | M12 | 21 | 23.5 | 79 | 50 | M24x1.5 | 2.14 |
| **AHSKA100-MM-12-129** | ○ | 100 | M12 | 21 | 32 | 129 | 100 | M24x1.5 | 2.39 |
| **AHSKA100-MM-12-179** | ○ | 100 | M12 | 21 | 39.5 | 179 | 150 | M24x1.5 | 2.78 |
| **AHSKA100-MM-16-079** | ○ | 100 | M16 | 29 | 33.5 | 79 | 50 | M24x1.5 | 2.23 |
| **AHSKA100-MM-16-129** | ○ | 100 | M16 | 29 | 36 | 129 | 100 | M24x1.5 | 2.55 |
| **AHSKA100-MM-16-179** | ○ | 100 | M16 | 29 | 42.5 | 179 | 150 | M24x1.5 | 3.07 |

**Yedek Parça** / *Spare Part* / *Ersatzteile*

Sipariş Örneği/Ordering Example/*Bestellbeispiel*
1 ad./pcs./stück AHSKA63-MM-10-076

*Soğutma Suyu Ünitesi*
*Cooling Tubes*
*Kühlmitteleinheit*

*Soğutma Suyu Ünitesi Anahtarı*
*Wrench For Delivery Unit For Coolant*
*Schlüssel Für Kühlmittelübergabeeinheit*

● *Stokta / In Stock / Auf Lager* ○ *Stokta Yok / Non Stock Item / Kein Lagerartikel, Lieferzeit auf Anfrage*

*Daha fazla bilgi için, 56-71. sayfalara bakabilirsiniz. / For more info, you can check pages between 56-71. / Weitere Informationen finden Sie auf den Seiten 56–71.*

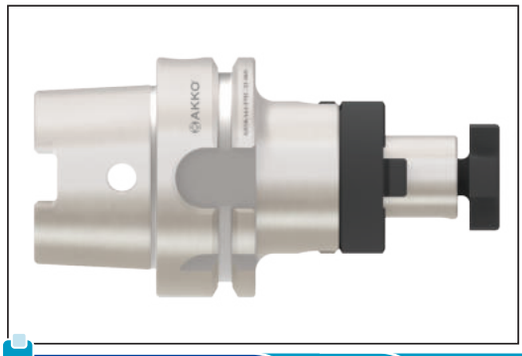

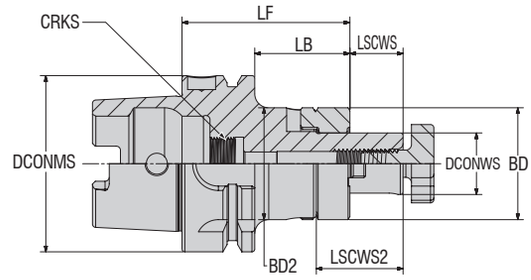


DIN 69893-1 FORM A | ISO 3937-3 | HRC 58±2 | G 2.5 25.000 min-1 U ≤ 1 gmm | g4 | CHIP | 0.005

| Sipariş Kodu *Ordering Code* *Bestell-Bezeichnung* | Stok *Stock* *Lager* | Tutucu Ölçüleri (mm) *Dimension (mm)* *Abmessung (mm)* | | | | | | | | | |
|---|---|---|---|---|---|---|---|---|---|---|---|
| | | DCONMS | DCONWS | LF | BD | BD2 | LSCWS | LSCWS2 | LB | CRKS | KG |
| **AHSKA32-FMC-16-055** | ○ | 32 | 16 | 55 | 32 | - | 17 | 27 | 35 | M10x1 | 0.32 |
| **AHSKA32-FMC-22-055** | ○ | 32 | 22 | 55 | 40 | - | 19 | 31 | 35 | M10x1 | 0.43 |
| **AHSKA32-FMC-27-065** | ○ | 32 | 27 | 65 | 48 | - | 21 | 33 | 45 | M10x1 | 0.7 |
| **AHSKA40-FMC-16-050** | ○ | 40 | 16 | 50 | 32 | - | 17 | 27 | 30 | M12x1 | 0.41 |
| **AHSKA40-FMC-22-050** | ○ | 40 | 22 | 50 | 40 | - | 19 | 31 | 30 | M12x1 | 0.5 |
| **AHSKA40-FMC-27-065** | ○ | 40 | 27 | 65 | 48 | - | 21 | 33.5 | 45 | M12x1 | 0.82 |
| **AHSKA50-FMC-16-050** | ○ | 50 | 16 | 50 | 32 | - | 17 | 27 | 24 | M16x1 | 0.56 |
| **AHSKA50-FMC-22-050** | ○ | 50 | 22 | 50 | 40 | - | 19 | 31 | 24 | M16x1 | 0.68 |
| **AHSKA50-FMC-27-065** | ○ | 50 | 27 | 65 | 48 | - | 21 | 33 | 39 | M16x1 | 0.98 |
| **AHSKA50-FMC-32-065** | ○ | 50 | 32 | 65 | 58 | - | 24 | 38 | 39 | M16x1 | 1.2 |
| **AHSKA63-FMC-16-060** | ○ | 63 | 16 | 60 | 32 | - | 17 | 27 | 34 | M18x1 | 0.88 |
| **AHSKA63-FMC-16-100** | ○ | 63 | 16 | 100 | 32 | - | 17 | 27 | 74 | M18x1 | 1.11 |
| **AHSKA63-FMC-16-160** | ○ | 63 | 16 | 160 | 32 | 38.5 | 17 | 27 | 134 | M18x1 | 1.55 |
| **AHSKA63-FMC-22-060** | ○ | 63 | 22 | 60 | 40 | - | 19 | 31 | 34 | M18x1 | 1.03 |
| **AHSKA63-FMC-22-100** | ○ | 63 | 22 | 100 | 40 | - | 19 | 31 | 74 | M18x1 | 1.4 |
| **AHSKA63-FMC-22-160** | ○ | 63 | 22 | 160 | 40 | 47 | 19 | 31 | 134 | M18x1 | 2.08 |
| **AHSKA63-FMC-27-060** | ○ | 63 | 27 | 60 | 48 | - | 21 | 33.5 | 34 | M18x1 | 1.22 |
| **AHSKA63-FMC-27-100** | ○ | 63 | 27 | 100 | 48 | - | 21 | 33.5 | 74 | M18x1 | 1.77 |
| **AHSKA63-FMC-32-060** | ○ | 63 | 32 | 60 | 58 | - | 24 | 38 | 34 | M18x1 | 1.45 |
| **AHSKA63-FMC-32-100** | ○ | 63 | 32 | 100 | 58 | - | 24 | 38 | 74 | M18x1 | 2.25 |
| **AHSKA63-FMC-32-160** | ○ | 63 | 32 | 160 | 58 | - | 24 | 38 | 134 | M18x1 | 3.46 |
| **AHSKA63-FMC-40-070** | ○ | 63 | 40 | 70 | 70 | - | 27 | 41 | 44 | M18x1 | 2.02 |
| **AHSKA63-FMC-40-100** | ○ | 63 | 40 | 100 | 70 | - | 27 | 41 | 74 | M18x1 | 2.67 |
| **AHSKA63-FMC-40-160** | ○ | 63 | 40 | 160 | 70 | - | 27 | 41 | 134 | M18x1 | 3.66 |
| **AHSKA80-FMC-16-060** | ○ | 80 | 16 | 60 | 32 | - | 17 | 27 | 34 | M20x1.5 | 1.31 |
| **AHSKA80-FMC-22-060** | ○ | 80 | 22 | 60 | 40 | - | 19 | 31 | 34 | M20x1.5 | 1.47 |
| **AHSKA80-FMC-27-060** | ○ | 80 | 27 | 60 | 48 | - | 21 | 33.5 | 34 | M20x1.5 | 1.66 |
| **AHSKA80-FMC-32-060** | ○ | 80 | 32 | 60 | 58 | - | 24 | 38 | 34 | M20x1.5 | 1.94 |
| **AHSKA80-FMC-40-070** | ○ | 80 | 40 | 70 | 70 | - | 27 | 41 | 44 | M20x1.5 | 2.66 |
| **AHSKA100-FMC-16-060** | ○ | 100 | 16 | 60 | 32 | - | 17 | 27 | 31 | M24x1.5 | 2.2 |
| **AHSKA100-FMC-16-100** | ○ | 100 | 16 | 100 | 32 | - | 17 | 27 | 71 | M24x1.5 | 2.44 |
| **AHSKA100-FMC-16-130** | ○ | 100 | 16 | 130 | 32 | - | 17 | 27 | 101 | M24x1.5 | 2.61 |
| **AHSKA100-FMC-16-160** | ○ | 100 | 16 | 160 | 32 | 37.5 | 17 | 27 | 131 | M24x1.5 | 2.88 |
| **AHSKA100-FMC-16-200** | ○ | 100 | 16 | 200 | 32 | 38 | 17 | 27 | 171 | M24x1.5 | 3.16 |
| **AHSKA100-FMC-22-060** | ○ | 100 | 22 | 60 | 40 | - | 19 | 31 | 31 | M24x1.5 | 2.34 |
| **AHSKA100-FMC-22-100** | ○ | 100 | 22 | 100 | 40 | - | 19 | 31 | 71 | M24x1.5 | 2.7 |
| **AHSKA100-FMC-22-130** | ○ | 100 | 22 | 130 | 40 | - | 19 | 31 | 101 | M24x1.5 | 2.97 |
| **AHSKA100-FMC-22-160** | ○ | 100 | 22 | 160 | 40 | 46 | 19 | 31 | 131 | M24x1.5 | 3.36 |
| **AHSKA100-FMC-22-200** | ○ | 100 | 22 | 200 | 40 | 46 | 19 | 31 | 171 | M24x1.5 | 3.78 |
| **AHSKA100-FMC-27-060** | ○ | 100 | 27 | 60 | 48 | - | 21 | 33.5 | 31 | M24x1.5 | 2.52 |
| **AHSKA100-FMC-27-100** | ○ | 100 | 27 | 100 | 48 | - | 21 | 33.5 | 71 | M24x1.5 | 3.05 |
| **AHSKA100-FMC-27-130** | ○ | 100 | 27 | 130 | 48 | - | 21 | 33.5 | 101 | M24x1.5 | 3.45 |
| **AHSKA100-FMC-27-160** | ○ | 100 | 27 | 160 | 48 | 54 | 21 | 33.5 | 131 | M24x1.5 | 4 |
| **AHSKA100-FMC-27-200** | ○ | 100 | 27 | 200 | 48 | 55 | 21 | 33.5 | 171 | M24x1.5 | 4.57 |
| **AHSKA100-FMC-32-060** | ○ | 100 | 32 | 60 | 58 | - | 24 | 38 | 31 | M24x1.5 | 2.78 |
| **AHSKA100-FMC-32-100** | ○ | 100 | 32 | 100 | 58 | - | 24 | 38 | 71 | M24x1.5 | 3.58 |
| **AHSKA100-FMC-32-130** | ○ | 100 | 32 | 130 | 58 | - | 24 | 38 | 101 | M24x1.5 | 4.17 |
| **AHSKA100-FMC-32-160** | ○ | 100 | 32 | 160 | 58 | 64.5 | 24 | 38 | 131 | M24x1.5 | 4.96 |
| **AHSKA100-FMC-40-070** | ○ | 100 | 40 | 70 | 70 | - | 27 | 41 | 41 | M24x1.5 | 3.51 |
| **AHSKA100-FMC-40-100** | ○ | 100 | 40 | 100 | 70 | - | 27 | 41 | 71 | M24x1.5 | 4.39 |
| **AHSKA100-FMC-40-130** | ○ | 100 | 40 | 130 | 70 | - | 27 | 41 | 101 | M24x1.5 | 5.27 |
| **AHSKA100-FMC-40-160** | ○ | 100 | 40 | 160 | 70 | - | 27 | 41 | 131 | M24x1.5 | 6.14 |

**Yedek Parça** / *Spare Part* / *Ersatzteile*

Sipariş Örneği/Ordering Example/*Bestellbeispiel*
1 ad./pcs./stück AHSKA32-FMC-16-055

*Soğutma Suyu Ünitesi* / *Cooling Tubes* / *Kühlmitteleinheit*

*Soğutma Suyu Ünitesi Anahtarı* / *Wrench For Delivery Unit For Coolant* / *Schlüssel Für Kühlmittelübergabeeinheit*

*Tırnaklı Pul DIN 6366* / *Clutch Drive Rings To DIN 6366* / *Mitnehmerringe DIN 6366*

*Karna DIN 6885* / *Drive Key DIN 6885* / *Paßfeder DIN 6885*

*Tarama Başlık Sıkma Civatası DIN 6367* / *Bolt For Shell Arbor DIN 6367* / *Scankopf-Klemmschraube DIN 6367*

*Tarama Başlık Civatası Sıkma Anahtarı DIN 6368* / *Wrench For Shell Arbor DIN 6368* / *Spannschlüssel DIN 6368 für Aufsteckdorne*

*Daha fazla bilgi için, 56-71. sayfalara bakabilirsiniz. / For more info, you can check pages between 56-71. / Weitere Informationen finden Sie auf den Seiten 56–71.*

● *Stokta / In Stock / Auf Lager* ○ *Stokta Yok / Non Stock Item / Kein Lagerartikel, Lieferzeit auf Anfrage*

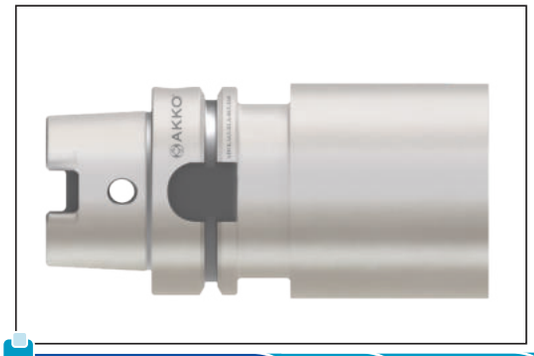

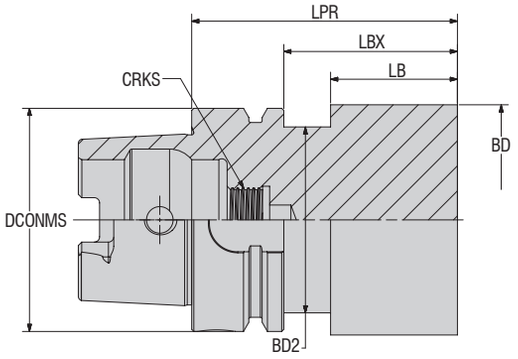


DIN 69893-1 FORM A

CHIP

| Sipariş Kodu *Ordering Code* *Bestell-Bezeichnung* | Stok *Stock* *Lager* | BAĞLAMA ÖLÇÜSÜ *CONNECTION SIZE* *BINDUNGSGRÖSSE* | Tutucu Ölçüleri (mm) *Dimension (mm)* *Abmessung (mm)* | | | | | | | |
|---|---|---|---|---|---|---|---|---|---|---|
| | | | DCONMS | BD | BD2 | LPR | LBX | LB | CRKS | KG |
| **AHSKA32-BL41-025-150** | ○ | 32 | 32 | 25 | - | 150 | 130 | - | M10x1 | 0.61 |
| **AHSKA32-BL41-032-100** | ○ | | 32 | 32 | 25 | 100 | 80 | 65 | M10x1 | 0.58 |
| **AHSKA40-BL41-040-150** | ○ | | 40 | 40 | 32.6 | 150 | 130 | 115 | M12x1 | 1.42 |
| **AHSKA40-BL41-070-100** | ○ | 40 | 40 | 70 | 32.6 | 100 | 80 | 65 | M12x1 | 2.24 |
| **AHSKA50-BL41-050-150** | ○ | 50 | 50 | 50 | 41.6 | 150 | 124 | 108 | M16x1 | 2.21 |
| **AHSKA50-BL41-075-070** | ○ | | 50 | 75 | 41.6 | 70 | 44 | 28 | M16x1 | 1.52 |
| **AHSKA63-BL41-063-160** | ○ | | 63 | 63 | 52.6 | 160 | 134 | 118 | M18x1 | 3.78 |
| **AHSKA63-BL41-080-250** | ○ | 63 | 63 | 80 | 52.6 | 250 | 224 | 208 | M18x1 | 9.06 |
| **AHSKA63-BL41-120-160** | ○ | | 63 | 120 | 52.6 | 160 | 134 | 118 | M18x1 | 11.32 |
| **AHSKA80-BL41-080-250** | ○ | 80 | 80 | 80 | 67.6 | 250 | 224 | 208 | M20x1.5 | 9.67 |
| **AHSKA80-BL41-090-310** | ○ | | 80 | 90 | 67.6 | 310 | 284 | 268 | M20x1.5 | 14.82 |
| **AHSKA100-BL41-097-250** | ○ | 100 | 100 | 97 | 87 | 250 | 221 | 205 | M24x1.5 | 14.54 |
| **AHSKA100-BL41-120-315** | ○ | | 100 | 120 | 87 | 315 | 286 | 270 | M24x1.5 | 26.54 |

**Yedek Parça** / *Spare Part* / *Ersatzteile*

*Soğutma Suyu Ünitesi*
*Cooling Tubes*
*Kühlmitteleinheit*

*Soğutma Suyu Ünitesi Anahtarı*
*Wrench For Delivery Unit For Coolant*
*Schlüssel Für Kühlmittelübergabeeinheit*

Sipariş Örneği/Ordering Example/*Bestellbeispiel*
1 ad./pcs./stück AHSKA32-BL41-025-150

● *Stokta / In Stock / Auf Lager* ○ *Stokta Yok / Non Stock Item / Kein Lagerartikel, Lieferzeit auf Anfrage*

*Daha fazla bilgi için, 56-71. sayfalara bakabilirsiniz. / For more info, you can check pages between 56-71. / Weitere Informationen finden Sie auf den Seiten 56–71.*

# POLİGONAL ŞAFTLI TUTUCULAR

## *POLYGONAL SHANK HOLDERS*

## *POLGYGONSCHAFT HALTER*

Teknik çizim ve fotoğraflar değişkenlik gösterebilir.
Illustrations shown may vary from actual product.
*Das Produkt kann von dem gezeigten Bild abweichen.*

AKKO®

konuşulan
the spoken kalite...
quality...

www.akko.com.tr

| 1 | 2 | 3 | 4 | 5 |
|---|---|---|---|---|
| A | C6 | EM | 06 | 080 |
| AKKO | GÖVDE TİPİ / SHANK TYPE / KÖRPERTYP | FORMU / FORM / FORM | ÇAP / DIAMETER / DURCHMESSER | TUTUCU BOY / HOLDER SIZE / HALTER GRÖSSE |

**POLYGONAL SHANK** 3-4-5-6-8

**EM** : **VELDON ŞAFTLI TAKIM TUTUCULAR** / END MILL HOLDER / *FRÄSERAUFNAHMEN*
**ER** : **ER SIKMA PENSLİ TAKIM TUTUCULAR** / COLLET CHUCKS (ER) / *SPANNFUTTER ER*
**FM** : **YÜZEY FREZE TAKIM TUTUCULAR** / SHELL MILL HOLDERS / *AUFSTECKFRÄSERDORNE*
**MM** : **MODÜLER PARMAK FREZE TUTUCULAR** / MILLING CUTTER ARBORS FOR SCREW-ON TYPE MILLING CUTTERS / *MODULARE SCHAFTFRÄSERHALTER*
**FMC** : **KOMBİNE YÜZEY FREZE TAKIM TUTUCULARI** / COMBI SHELL MILL HOLDER / *KOMBINIERTE FLÄCHENFRÄSHALTER*
**ASHR** : **DİKDÖRTGEN SAPLI KATER TUTUCULAR** / TOOLHOLDER AXIAL / *WERKZEUGHALTER AXIAL*
**EX** : **UZATMA ADAPTÖR TUTUCULAR** / EXTENSION / *WERKZEUGHALTER AXIAL*
**BL41** : **BLANK TUTUCULAR** / BLANK HOLDERS / *SCHRUMPFVERLÄNGERUNGEN*

## KALİTE KONTROL
## QUALITY CONTROL
## QUALITÄTSKONTROLLE

### POLYGONAL SHANK

**POLYGONAL SHANK** 3-4-5-6-8

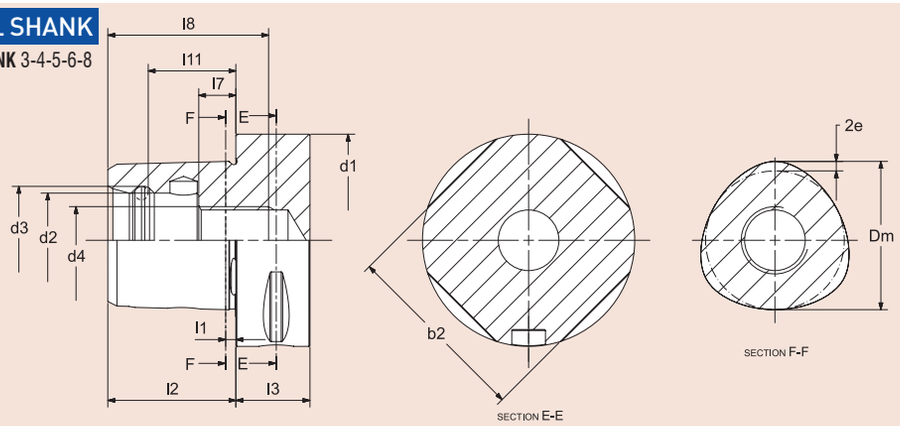


***ST'ye kıyasla POLYGON SHANK 'ın sahip olduğu avantajlar şu şekildedir:***
- *Klempli takımları spindl'a bağlarken yüksek oranda tekrarlanabilir doğruluk*
- *Düz temas yüzeyli sabit eksenel konumlandırma*
- *Yüksek hızlı kesime uygun*
- *Çekme saplaması gerekmez*
- *Arayüz ile eşsiz bir konik poligon ve flanşlı yüz kontağı*
- *Çevresel yönde tam konumlandırma*
- *En yüksek salgı hassasiyeti, tork ve sağlamlık*
- *En yüksek hassasiyete sahip yenilikçi modüler alet sistemi*
- *Hem torna hem de freze merkezleri için uygun*
- *Dahili veri çipi için çap Ø 10 mm*

***Malzeme:***
- *Yüksek gerilimli parçalar için özel yüzey sertleştirme çeliği*
- *Yüzey sertliği: 58± 2 HRC*
- *Çekirdekte çekme dayanımı min. 950 N/mm2*

***Compared to the steep taper the POLYGON SHANK has the following advantages:***
- *Highly repeatable accuracy when clamping tools into spindle*
- *Fixed axial positioning with flat contact surface*
- *Suitable for high speed cutting*
- *No pull stud necessary*
- *Interface with a unique tapered polygon and flange face contact*
- *Exact positioning in the circumferential direction*
- *Highest runout accuracy, torque and rigidity*
- *Innovative modular tool system with highest precision*
- *Suitable for both turning and milling centres*
- *Incl. bore for data chip Ø 10 mm*

***Material:***
- *Special case-hardening steel for highly stressed parts*
- *Surface hardness: 58± 2 HRC*
- *Tensile strength in core min. 950 N/mm2*

***Gegenüber dem Steilkegel hat die POLYGON SHANK Schnittstelle folgende Vorteile:***
- *Hohe Wiederholgenauigkeit beim Einwechseln von Werkzeugen*
- *Feste axiale Positionierung durch Plananlage*
- *Eignung für hohe Drehzahlen*
- *Kein Anzugsbolzen notwendig*
- *Schnittstelle mit polygonförmigem Kegel und Plananlage*
- *Exakte Positionierung in Umfangrichtung*
- *Sehr hohe Rundlaufgenauigkeit, hohes Drehmoment und hohe Steifigkeit*
- *Innovatives modulares Werkzeugsystem mit höchster Präzision*
- *Für Bearbeitung auf Dreh- und Fräszentren gleichermaßen geeignet*
- *Inkl. Codeträgerbohrung Ø 10 mm*

***Werkstoff:***
- *Spezieller Einsatzstahl für hochbeanspruchte Bauteile*
- *Oberflächenhärte: 58± 2 HRC*
- *Zugfestigkeit im Kern mind. 950 N/mm2*

| POLYGON SHANK | d1 ±0.1 | d2 0.1 −0.05 | d3 ±0.05 | d4 | b2 | Dm | e | l1 | l2 ±0.1 | l3 min. | l7 ±0.15 | l8 min. | l11 ±0.1 |
|---|---|---|---|---|---|---|---|---|---|---|---|---|---|
| 3 | 32 | 15 | 16.5 | M12x1.5 | 28.3 | 22 | 0.7 | 2.5 | 19 | 15 | 6 | 25 | 13.5 |
| 4 | 40 | 18 | 20 | M14x1.5 | 35.3 | 28 | 0.9 | 2.5 | 24 | 20 | 9 | 30 | 17.5 |
| 5 | 50 | 21 | 24 | M16x1.5 | 44.4 | 35 | 1.12 | 3 | 30 | 20 | 10 | 37 | 22 |
| 6 | 63 | 28 | 32 | M20x2 | 55.8 | 44 | 1.4 | 3 | 38 | 22 | 11 | 47 | 26 |
| 8 | 80 | 32 | 38 | M20x2 | 71.1 | 55 | 2 | 3 | 48 | 30 | 20 | 48 | 34 |

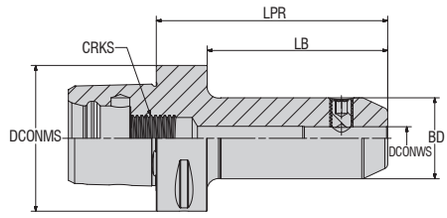


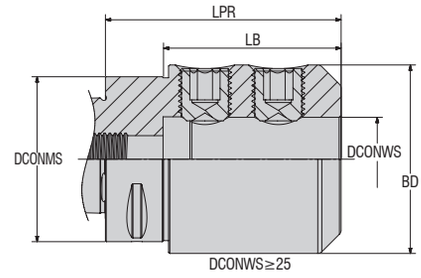


ISO 26623-1 | HRC 58±2 | H5 | DIN 1835-B | G 2.5 25.000 min-1 U ≤ 1 gmm | CHIP | 0.003

| Sipariş Kodu *Ordering Code* *Bestell-Bezeichnung* | Stok *Stock* *Lager* | Tutucu Ölçüleri (mm) *Dimension (mm)* *Abmessung (mm)* | | | | | | |
|---|---|---|---|---|---|---|---|---|
| | | DCONMS | DCONWS | LPR | BD | LB | CRKS | KG |
| AC3-EM-06-046 | ● | 32 | 06 | 46 | 25 | 31 | M12x1.5 | 0.22 |
| AC3-EM-08-046 | ● | 32 | 08 | 46 | 28 | 31 | M12x1.5 | 0.25 |
| AC3-EM-10-050 | ● | 32 | 10 | 50 | 34 | 35 | M12x1.5 | 0.33 |
| AC3-EM-12-055 | ● | 32 | 12 | 55 | 42 | 40 | M12x1.5 | 0.46 |
| AC4-EM-06-050 | ● | 40 | 06 | 50 | 25 | 30 | M14x1.5 | 0.34 |
| AC4-EM-08-050 | ● | 40 | 08 | 50 | 28 | 30 | M14x1.5 | 0.37 |
| AC4-EM-10-050 | ● | 40 | 10 | 50 | 35 | 30 | M14x1.5 | 0.43 |
| AC4-EM-12-055 | ● | 40 | 12 | 55 | 42 | 35 | M14x1.5 | 0.55 |
| AC4-EM-14-055 | ● | 40 | 14 | 55 | 44 | 35 | M14x1.5 | 0.55 |
| AC4-EM-16-060 | ● | 40 | 16 | 60 | 48 | 40 | M14x1.5 | 0.63 |
| AC5-EM-06-050 | ● | 50 | 06 | 50 | 25 | 30 | M16x1.5 | 0.51 |
| AC5-EM-08-050 | ● | 50 | 08 | 50 | 28 | 30 | M16x1.5 | 0.54 |
| AC5-EM-10-055 | ● | 50 | 10 | 55 | 35 | 35 | M16x1.5 | 0.64 |
| AC5-EM-12-060 | ● | 50 | 12 | 60 | 42 | 40 | M16x1.5 | 0.78 |
| AC5-EM-14-060 | ● | 50 | 14 | 60 | 44 | 40 | M16x1.5 | 0.8 |
| AC5-EM-16-060 | ● | 50 | 16 | 60 | 48 | 40 | M16x1.5 | 0.86 |
| AC5-EM-18-060 | ● | 50 | 18 | 60 | 50 | 40 | M16x1.5 | 0.89 |
| AC5-EM-20-060 | ● | 50 | 20 | 60 | 52 | 40 | M16x1.5 | 0.9 |
| AC5-EM-25-080 | ● | 50 | 25 | 80 | 65 | 60 | M16x1.5 | 1.53 |
| AC6-EM-06-075 | ● | 63 | 06 | 75 | 25 | 53 | M20x2 | 0.9 |
| AC6-EM-06-100 | ● | 63 | 06 | 100 | 25 | 78 | M20x2 | 1 |
| AC6-EM-08-055 | ● | 63 | 08 | 55 | 28 | 33 | M20x2 | 0.88 |
| AC6-EM-08-075 | ○ | 63 | 08 | 75 | 28 | 53 | M20x2 | 0.96 |
| AC6-EM-08-100 | ● | 63 | 08 | 100 | 28 | 78 | M20x2 | 1.08 |
| AC6-EM-10-060 | ○ | 63 | 10 | 60 | 35 | 35 | M20x2 | 0.99 |
| AC6-EM-10-075 | ○ | 63 | 10 | 75 | 35 | 53 | M20x2 | 1.1 |
| AC6-EM-10-100 | ● | 63 | 10 | 100 | 35 | 78 | M20x2 | 1.25 |
| AC6-EM-12-065 | ● | 63 | 12 | 65 | 42 | 43 | M20x2 | 1.12 |
| AC6-EM-12-100 | ● | 63 | 12 | 100 | 42 | 78 | M20x2 | 1.48 |
| AC6-EM-14-065 | ● | 63 | 14 | 65 | 44 | 43 | M20x2 | 1.15 |
| AC6-EM-14-100 | ● | 63 | 14 | 100 | 44 | 78 | M20x2 | 1.55 |
| AC6-EM-16-065 | ● | 63 | 16 | 65 | 48 | 43 | M20x2 | 1.24 |
| AC6-EM-16-085 | ○ | 63 | 16 | 85 | 48 | 63 | M20x2 | 1.35 |

**Yedek Parça** / *Spare Part* / *Ersatzteile*

*Veldon Sıkma Civatası DIN 1835 B*
*Clamping Screw Weldon DIN 1835 B*
*Weldon-Klemmschraube DIN 1835 B*

Sipariş Örneği/Ordering Example/*Bestellbeispiel*
1 ad./pcs./stück AC3-EM-06-046

● *Stokta / In Stock / Auf Lager* ○ *Stokta Yok / Non Stock Item / Kein Lagerartikel, Lieferzeit auf Anfrage*

*Daha fazla bilgi için, 56-71. sayfalara bakabilirsiniz. / For more info, you can check pages between 56-71. / Weitere Informationen finden Sie auf den Seiten 56–71.*

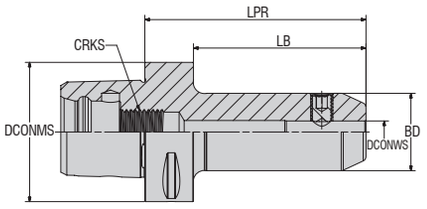


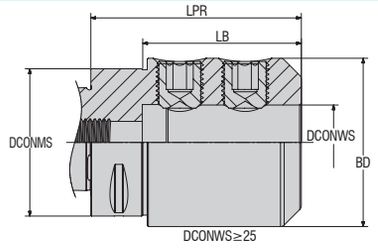


ISO 26623-1 | HRC 58±2 | H5 | DIN 1835-B | G 2.5 25.000 min-1 U ≤ 1 gmm | CHIP | 0.003

| Sipariş Kodu *Ordering Code* *Bestell-Bezeichnung* | Stok *Stock* *Lager* | Tutucu Ölçüleri (mm) *Dimension (mm)* *Abmessung (mm)* | | | | | | |
|---|---|---|---|---|---|---|---|---|
| | | DCONMS | DCONWS | LPR | BD | LB | CRKS | KG |
| AC6-EM-16-100 | ● | 63 | 16 | 100 | 48 | 78 | M20x2 | 1.7 |
| AC6-EM-18-065 | ○ | 63 | 18 | 65 | 50 | 43 | M20x2 | 1.27 |
| AC6-EM-20-065 | ○ | 63 | 20 | 65 | 52 | 43 | M20x2 | 1.29 |
| AC6-EM-20-100 | ● | 63 | 20 | 100 | 52 | 78 | M20x2 | 1.83 |
| AC6-EM-25-080 | ● | 63 | 25 | 80 | 63 | 58 | M20x2 | 1.82 |
| AC6-EM-32-090 | ● | 63 | 32 | 90 | 72 | 68 | M20x2 | 2.35 |
| AC6-EM-40-100 | ● | 63 | 40 | 100 | 79 | 78 | M20x2 | 2.85 |
| AC8-EM-06-070 | ● | 80 | 06 | 70 | 25 | 40 | M20x2 | 1.84 |
| AC8-EM-08-070 | ● | 80 | 08 | 70 | 28 | 40 | M20x2 | 1.88 |
| AC8-EM-10-070 | ● | 80 | 10 | 70 | 35 | 40 | M20x2 | 1.96 |
| AC8-EM-12-070 | ● | 80 | 12 | 70 | 42 | 40 | M20x2 | 2.07 |
| AC8-EM-14-070 | ● | 80 | 14 | 70 | 44 | 40 | M20x2 | 2.09 |
| AC8-EM-16-070 | ● | 80 | 16 | 70 | 48 | 40 | M20x2 | 2.16 |
| AC8-EM-18-070 | ● | 80 | 18 | 70 | 50 | 40 | M20x2 | 2.18 |
| AC8-EM-20-070 | ● | 80 | 20 | 70 | 52 | 40 | M20x2 | 2.19 |
| AC8-EM-25-090 | ● | 80 | 25 | 90 | 63 | 60 | M20x2 | 2.65 |
| AC8-EM-32-100 | ● | 80 | 32 | 100 | 72 | 70 | M20x2 | 2.9 |
| AC8-EM-40-110 | ● | 80 | 40 | 110 | 80 | 80 | M20x2 | 3.92 |
| AC8-EM-50-120 | ● | 80 | 50 | 120 | 100 | 90 | M20x2 | 5.3 |

**Yedek Parça** / *Spare Part* / *Ersatzteile*

*Veldon Sıkma Civatası DIN 1835 B /Clamping Screw Weldon DIN 1835 B*
*Weldon-Klemmschraube DIN 1835 B*

*Daha fazla bilgi için, 56-71. sayfalara bakabilirsiniz. / For more info, you can check pages between 56-71. / Weitere Informationen finden Sie auf den Seiten 56–71.*

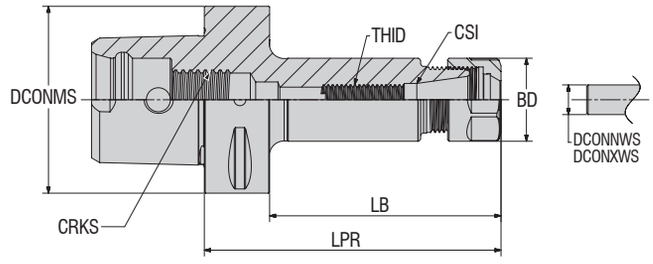


ISO 26623-1 | DIN 15488 | HRC 58±2 | G 2.5 25.000 min-1 U ≤ 1 gmm | CHIP | 0.003

| Sipariş Kodu *Ordering Code* *Bestell-Bezeichnung* | Stok *Stock* *Lager* | Tutucu Ölçüleri (mm) *Dimension (mm)* *Abmessung (mm)* | | | | | | | | | |
|---|---|---|---|---|---|---|---|---|---|---|---|
| | | DCONMS | CSI | DCONNWS | DCONXWS | BD | LPR | LB | THID | CRKS | KG |
| AC3-ER-16-045 | ● | 32 | ER16 | 1.0 | 10 | 28 | 45 | 30 | M10 | M12x1.5 | 0.19 |
| AC4-ER-16-070 | ● | 40 | ER16 | 1.0 | 10 | 28 | 70 | 50 | M10 | M14x1.5 | 0.41 |
| AC4-ER-25-055 | ● | 40 | ER25 | 1.0 | 16 | 42 | 55 | 35 | M16 | M14x1.5 | 0.4 |
| AC4-ER-32-055 | ● | 40 | ER32 | 2.0 | 20 | 50 | 55 | 35 | M16 | M14x1.5 | 0.44 |
| AC5-ER-16-055 | ● | 50 | ER16 | 1.0 | 10 | 28 | 55 | 35 | M10 | M16x1.5 | 0.52 |
| AC5-ER-16-100 | ● | 50 | ER16 | 1.0 | 10 | 28 | 100 | 80 | M10 | M16x1.5 | 0.71 |
| AC5-ER-16-130 | ● | 50 | ER16 | 1.0 | 10 | 28 | 130 | 110 | M10 | M16x1.5 | 0.82 |
| AC5-ER-25-055 | ● | 50 | ER25 | 1.0 | 16 | 42 | 55 | 35 | M16 | M16x1.5 | 0.6 |
| AC5-ER-25-100 | ● | 50 | ER25 | 1.0 | 16 | 42 | 100 | 80 | M16 | M16x1.5 | 1.03 |
| AC5-ER-32-100 | ● | 50 | ER32 | 2.0 | 20 | 50 | 100 | 80 | M16 | M16x1.5 | 1.25 |
| AC6-ER-16-060 | ● | 63 | ER16 | 1.0 | 10 | 28 | 60 | 38 | M10 | M20x2 | 0.87 |
| AC6-ER-16-100 | ● | 63 | ER16 | 1.0 | 10 | 28 | 100 | 78 | M10 | M20x2 | 1.03 |
| AC6-ER-16-130 | ● | 63 | ER16 | 1.0 | 10 | 28 | 130 | 108 | M10 | M20x2 | 1.15 |
| AC6-ER-25-060 | ● | 63 | ER25 | 1.0 | 16 | 42 | 60 | 38 | M16 | M20x2 | 0.95 |
| AC6-ER-25-100 | ● | 63 | ER25 | 1.0 | 16 | 42 | 100 | 78 | M16 | M20x2 | 1.34 |
| AC6-ER-25-130 | ● | 63 | ER25 | 1.0 | 16 | 42 | 130 | 108 | M16 | M20x2 | 1.65 |
| AC6-ER-32-060 | ● | 63 | ER32 | 2.0 | 20 | 50 | 60 | 38 | M16 | M20x2 | 1 |
| AC6-ER-32-100 | ● | 63 | ER32 | 2.0 | 20 | 50 | 100 | 78 | M16 | M20x2 | 1.56 |
| AC6-ER-32-130 | ● | 63 | ER32 | 2.0 | 20 | 50 | 130 | 108 | M16 | M20x2 | 1.99 |
| AC6-ER-40-065 | ● | 63 | ER40 | 3.0 | 26 | 63 | 65 | 43 | M16 | M20x2 | 1.21 |
| AC6-ER-40-100 | ● | 63 | ER40 | 3.0 | 26 | 63 | 100 | 78 | M16 | M20x2 | 2.01 |
| AC6-ER-40-130 | ● | 63 | ER40 | 3.0 | 26 | 63 | 130 | 108 | M16 | M20x2 | 2.71 |
| AC8-ER-32-070 | ● | 80 | ER32 | 2.0 | 20 | 50 | 70 | 40 | M16 | M20x2 | 1.98 |
| AC8-ER-32-100 | ● | 80 | ER32 | 2.0 | 20 | 50 | 100 | 70 | M16 | M20x2 | 2.42 |
| AC8-ER-32-160 | ● | 80 | ER32 | 2.0 | 20 | 50 | 160 | 130 | M16 | M20x2 | 3.3 |
| AC8-ER-40-070 | ● | 80 | ER40 | 3.0 | 26 | 63 | 70 | 40 | M16 | M20x2 | 2.09 |
| AC8-ER-40-100 | ● | 80 | ER40 | 3.0 | 26 | 63 | 100 | 70 | M16 | M20x2 | 2.8 |
| AC8-ER-40-160 | ● | 80 | ER40 | 3.0 | 26 | 63 | 160 | 130 | M16 | M20x2 | 4.23 |

**Yedek Parça** / *Spare Part* / *Ersatzteile*

*ER Tipi Anahtar*
*Wrench ER*
*Spannschlüssel ER*

*Pensler ER DIN6499/ISO 15488-B*
*Collet Chuck ER DIN6499/ISO 15488-B*
*Spannschlüssel ER DIN6499/ISO 15488-B*

*Pens Kapağı*
*Clamping Nuts*
*Spannmutter*

Sipariş Örneği/Ordering Example/*Bestellbeispiel*
1 ad./pcs./stück AC3-ER-16-045

*Daha fazla bilgi için, 56-71. sayfalara bakabilirsiniz. / For more info, you can check pages between 56-71. / Weitere Informationen finden Sie auf den Seiten 56–71.*

● *Stokta / In Stock / Auf Lager* ○ *Stokta Yok / Non Stock Item / Kein Lagerartikel, Lieferzeit auf Anfrage*

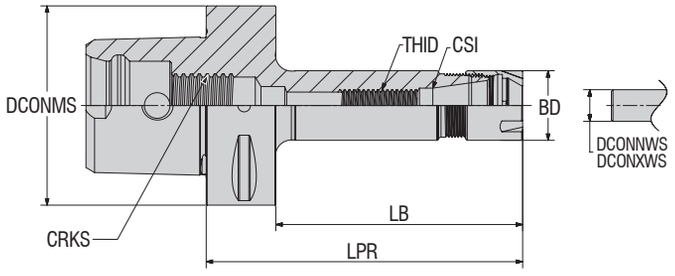


ISO 26623-1 | HRC 58±2 | G 2.5 25.000 min-1 U ≤ 1 gmm | CHIP | 0.003

| Sipariş Kodu *Ordering Code* *Bestell-Bezeichnung* | Stok *Stock* *Lager* | Tutucu Ölçüleri (mm) *Dimension (mm)* *Abmessung (mm)* | | | | | | | | | |
|---|---|---|---|---|---|---|---|---|---|---|---|
| | | DCONMS | CSI | DCONNWS | DCONXWS | BD | LPR | LB | THID | CRKS | KG |
| **AC4-ER-16-070-M** | ● | 40 | ER16 | 0.5 | 10 | 22 | 70 | 50 | M10 | M14x1.5 | 0.32 |
| **AC5-ER-16-100-M** | ● | 50 | ER16 | 0.5 | 10 | 22 | 100 | 80 | M10 | M16x1.5 | 0.58 |
| **AC6-ER-16-100-M** | ○ | 63 | ER16 | 0.5 | 10 | 22 | 100 | 78 | M10 | M20x2 | 0.91 |
| **AC6-ER-16-130-M** | ● | 63 | ER16 | 0.5 | 10 | 22 | 130 | 108 | M10 | M20x2 | 1 |

**Yedek Parça** / *Spare Part* / *Ersatzteile*

*ER Tipi Anahtar Mini (M)*
*Wrench ER Mini (M)*
*Spannschlüssel ER Mini (M)*

*Pensler ER DIN6499/ISO 15488-B*
*Collet Chuck ER DIN6499/ISO 15488-B*
*Spannschlüssel ER DIN6499/ISO 15488-B*

*Pens Kapağı*
*Clamping Nuts*
*Spannmutter*

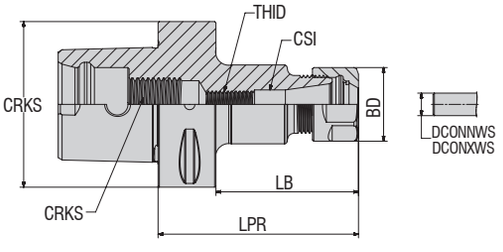


ISO 26623-1 | HRC 58±2 | G 2.5 25.000 min-1 U ≤ 1 gmm | CHIP | 0.003

| Sipariş Kodu *Ordering Code* *Bestell-Bezeichnung* | Stok *Stock* *Lager* | Tutucu Ölçüleri (mm) *Dimension (mm)* *Abmessung (mm)* | | | | | | | | | |
|---|---|---|---|---|---|---|---|---|---|---|---|
| | | DCONMS | CSI | DCONNWS | DCONXWS | BD | LPR | LB | THID | CRKS | KG |
| **AC6-ER-16-3.0** | ● | 63 | ER16 | 1.0 | 10 | 28 | 75 | 54.2 | M10 | M10x1.5 | |
| **AC6-ER-32-3.0** | ● | 63 | ER32 | 2.0 | 20 | 50 | 75 | 54.2 | M10 | M10x1.5 | |

*Daha fazla bilgi için, 56-71. sayfalara bakabilirsiniz. / For more info, you can check pages between 56-71. / Weitere Informationen finden Sie auf den Seiten 56–71.*

Sipariş Örneği/Ordering Example/*Bestellbeispiel*
1 ad./pcs./stück AC4-ER-16-070-M

● *Stokta / In Stock / Auf Lager* ○ *Stokta Yok / Non Stock Item / Kein Lagerartikel, Lieferzeit auf Anfrage*

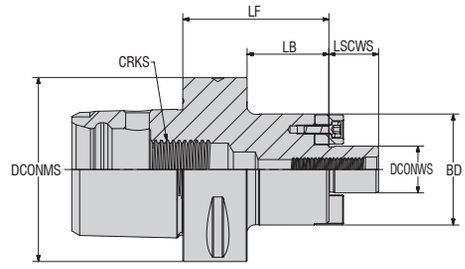


ISO 26623-1 | HRC 58±2 | G 2.5 25.000 min-1 U ≤ 1 gmm | CHIP | g4 | 0.005

| Sipariş Kodu *Ordering Code* *Bestell-Bezeichnung* | Stok *Stock* *Lager* | Tutucu Ölçüleri (mm) *Dimension (mm)* *Abmessung (mm)* | | | | | | | |
|---|---|---|---|---|---|---|---|---|---|
| | | DCONMS | DCONWS | BD | LSCWS | LB | LF | CRKS | KG |
| AC3-FM-16-030 | ● | 32 | 16 | 38 | 17 | 15 | 30 | M12x1.5 | 0.27 |
| AC4-FM-16-035 | ● | 40 | 16 | 38 | 17 | 15 | 35 | M14x1.5 | 0.41 |
| AC4-FM-22-040 | ● | 40 | 22 | 48 | 19 | 20 | 40 | M14x1.5 | 0.59 |
| AC5-FM-16-035 | ● | 50 | 16 | 38 | 17 | 15 | 35 | M16x1.5 | 0.59 |
| AC5-FM-16-070 | ● | 50 | 16 | 36 | 17 | 50 | 70 | M16x1.5 | 0.88 |
| AC5-FM-22-040 | ● | 50 | 22 | 48 | 19 | 20 | 40 | M16x1.5 | 0.77 |
| AC5-FM-22-070 | ● | 50 | 22 | 48 | 19 | 50 | 70 | M16x1.5 | 1.17 |
| AC5-FM-27-040 | ● | 50 | 27 | 60 | 21.5 | 20 | 40 | M16x1.5 | 0.95 |
| AC6-FM-16-035 | ● | 63 | 16 | 38 | 17 | 13 | 35 | M20x2 | 0.9 |
| AC6-FM-16-100 | ● | 63 | 16 | 38 | 17 | 78 | 100 | M20x2 | 1.45 |
| AC6-FM-22-050 | ○ | 63 | 22 | 48 | 19 | 28 | 50 | M20x2 | 1.12 |
| AC6-FM-22-100 | ● | 63 | 22 | 48 | 19 | 78 | 100 | M20x2 | 1.87 |
| AC6-FM-27-050 | ○ | 63 | 27 | 60 | 21.5 | 28 | 50 | M20x2 | 1.35 |
| AC6-FM-27-100 | ● | 63 | 27 | 60 | 21.5 | 78 | 100 | M20x2 | 2.54 |
| AC6-FM-32-060 | ● | 63 | 32 | 78 | 24 | 38 | 60 | M20x2 | 4.8 |
| AC8-FM-27-100 | ● | 80 | 27 | 60 | 21.5 | 70 | 100 | M20x2 | 3.34 |
| AC8-FM-32-100 | ● | 80 | 32 | 78 | 24 | 70 | 100 | M20x2 | 4.48 |
| AC8-FM-40-060 | ● | 80 | 40 | 88 | 27 | 30 | 60 | M20x2 | 3.18 |

**Yedek Parça** / *Spare Part* / *Ersatzteile*

Sipariş Örneği/Ordering Example/*Bestellbeispiel*
1 ad./pcs./stück AC3-FM-16-030

*Tarama Başlık Sıkma Civatası DIN 6367*
*Bolt For Shell Arbor DIN 6367*
*Scankopf-Klemmschraube DIN 6367*

*Tarama Başlık Civatası Sıkma Anahtarı DIN 6368*
*Wrench For Shell Arbor DIN 6368*
*Spannschlüssel DIN 6368 für Aufsteckdorne*

*Alın Kamalı Malafa Kaması*
*Drive Key*
*Mitnehmersteine Mit Schraube*

*Daha fazla bilgi için, 56-71. sayfalara bakabilirsiniz. / For more info, you can check pages between 56-71. / Weitere Informationen finden Sie auf den Seiten 56–71.*

● *Stokta / In Stock / Auf Lager* ○ *Stokta Yok / Non Stock Item / Kein Lagerartikel, Lieferzeit auf Anfrage*

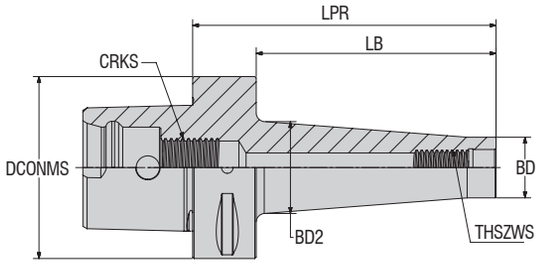


ISO 26623-1 | HRC 58±2 | G 2.5 25.000 min⁻¹ U ≤ 1 gmm | CHIP | 0.003

| Sipariş Kodu *Ordering Code* *Bestell-Bezeichnung* | Stok *Stock* *Lager* | Tutucu Ölçüleri (mm) *Dimension (mm)* *Abmessung (mm)* | | | | | | | |
|---|---|---|---|---|---|---|---|---|---|
| | | DCONMS | THSZWS | BD | BD2 | LPR | LB | CRKS | KG |
| AC3-MM-08-030 | ○ | 32 | M8 | 13 | 14.5 | 30 | 15 | M12x1.5 | 0.12 |
| AC3-MM-10-030 | ○ | 32 | M10 | 18 | 19.5 | 30 | 15 | M12x1.5 | 0.13 |
| AC3-MM-12-035 | ○ | 32 | M12 | 21 | 23.5 | 35 | 20 | M12x1.5 | 0.15 |
| AC3-MM-16-040 | ○ | 32 | M16 | 29 | - | 40 | 25 | M12x1.5 | 0.2 |
| AC4-MM-08-030 | ○ | 40 | M8 | 13 | 14.5 | 30 | 10 | M14x1.5 | 0.25 |
| AC4-MM-10-035 | ○ | 40 | M10 | 18 | 19.5 | 35 | 15 | M14x1.5 | 0.27 |
| AC4-MM-12-040 | ○ | 40 | M12 | 21 | 23.5 | 40 | 20 | M14x1.5 | 0.29 |
| AC4-MM-16-045 | ○ | 40 | M16 | 29 | - | 45 | 25 | M14x1.5 | 0.33 |
| AC5-MM-08-050 | ○ | 50 | M8 | 13 | 15 | 50 | 30 | M16x1.5 | 0.44 |
| AC5-MM-08-075 | ○ | 50 | M8 | 13 | 22.5 | 75 | 55 | M16x1.5 | 0.51 |
| AC5-MM-10-050 | ○ | 50 | M10 | 18 | 20 | 50 | 30 | M16x1.5 | 0.47 |
| AC5-MM-10-075 | ○ | 50 | M10 | 18 | 23 | 75 | 55 | M16x1.5 | 0.54 |
| AC5-MM-12-050 | ○ | 50 | M12 | 21 | 24 | 50 | 30 | M16x1.5 | 0.49 |
| AC5-MM-12-075 | ○ | 50 | M12 | 21 | 24 | 75 | 55 | M16x1.5 | 0.56 |
| AC5-MM-16-050 | ○ | 50 | M16 | 29 | - | 50 | 30 | M16x1.5 | 0.52 |
| AC5-MM-16-075 | ○ | 50 | M16 | 29 | 34 | 75 | 55 | M16x1.5 | 0.69 |
| AC6-MM-08-050 | ○ | 63 | M8 | 13 | 15 | 50 | 28 | M16x1.5 | 0.77 |
| AC6-MM-08-075 | ○ | 63 | M8 | 13 | 22.5 | 75 | 53 | M16x1.5 | 0.84 |
| AC6-MM-10-050 | ○ | 63 | M10 | 18 | 20 | 50 | 28 | M16x1.5 | 0.79 |
| AC6-MM-10-075 | ○ | 63 | M10 | 18 | 23 | 75 | 53 | M16x1.5 | 0.86 |
| AC6-MM-12-050 | ○ | 63 | M12 | 21 | 24 | 50 | 28 | M16x1.5 | 0.81 |
| AC6-MM-12-075 | ○ | 63 | M12 | 21 | 24 | 75 | 53 | M16x1.5 | 0.88 |
| AC6-MM-16-050 | ○ | 63 | M16 | 29 | - | 50 | 28 | M16x1.5 | 0.85 |
| AC6-MM-16-075 | ○ | 63 | M16 | 29 | 34 | 75 | 53 | M16x1.5 | 1.01 |
| AC8-MM-08-085 | ○ | 80 | M8 | 13 | 22.5 | 85 | 55 | M20x2 | 1.81 |
| AC8-MM-10-085 | ○ | 80 | M10 | 18 | 23 | 85 | 55 | M20x2 | 1.84 |
| AC8-MM-12-085 | ○ | 80 | M12 | 21 | 24 | 85 | 55 | M20x2 | 1.85 |
| AC8-MM-16-085 | ○ | 80 | M16 | 29 | 34 | 85 | 55 | M20x2 | 1.99 |

● *Stokta / In Stock / Auf Lager* ○ *Stokta Yok / Non Stock Item / Kein Lagerartikel, Lieferzeit auf Anfrage*

Sipariş Örneği/Ordering Example/*Bestellbeispiel*
1 ad./pcs./stück AC3-MM-08-030

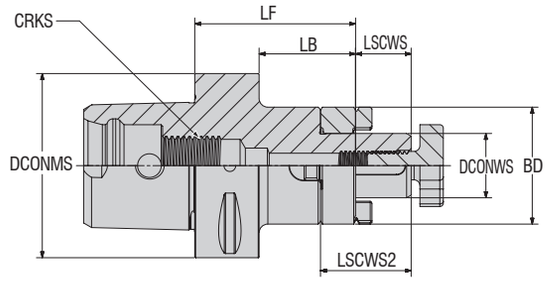


ISO 26623-1 | HRC 58±2 | G 2.5 25.000 min-1 U ≤ 1 gmm | CHIP | g4 | 0.005

| Sipariş Kodu *Ordering Code* *Bestell-Bezeichnung* | Stok *Stock* *Lager* | Tutucu Ölçüleri (mm) *Dimension (mm)* *Abmessung (mm)* | | | | | | | | |
|---|---|---|---|---|---|---|---|---|---|---|
| | | DCONMS | DCONWS | LF | BD | LSCWS | LSCWS2 | LB | CRKS | KG |
| AC3-FMC-16-045 | ○ | 32 | 16 | 45 | 32 | 17 | 27 | 30 | M12x1.5 | 0.32 |
| AC4-FMC-16-045 | ○ | 40 | 16 | 45 | 32 | 17 | 27 | 25 | M14x1.5 | 0.43 |
| AC4-FMC-22-050 | ○ | 40 | 22 | 50 | 40 | 19 | 31 | 30 | M14x1.5 | 0.59 |
| AC5-FMC-16-045 | ○ | 50 | 16 | 45 | 32 | 17 | 27 | 25 | M16x1.5 | 0.6 |
| AC5-FMC-16-070 | ○ | 50 | 16 | 70 | 32 | 17 | 27 | 50 | M16x1.5 | 0.75 |
| AC5-FMC-22-045 | ○ | 50 | 22 | 45 | 40 | 19 | 31 | 25 | M16x1.5 | 0.72 |
| AC5-FMC-22-070 | ○ | 50 | 22 | 70 | 40 | 19 | 31 | 50 | M16x1.5 | 0.95 |
| AC5-FMC-27-055 | ○ | 50 | 27 | 55 | 48 | 21 | 33.5 | 35 | M16x1.5 | 1.01 |
| AC5-FMC-32-055 | ○ | 50 | 32 | 55 | 58 | 24 | 38 | 35 | M16x1.5 | 1.29 |
| AC6-FMC-16-050 | ○ | 63 | 16 | 50 | 32 | 17 | 27 | 28 | M20x2 | 0.95 |
| AC6-FMC-16-100 | ○ | 63 | 16 | 100 | 32 | 17 | 27 | 78 | M20x2 | 1.24 |
| AC6-FMC-22-055 | ○ | 63 | 22 | 55 | 40 | 19 | 31 | 33 | M20x2 | 1.12 |
| AC6-FMC-22-100 | ○ | 63 | 22 | 100 | 40 | 19 | 31 | 78 | M20x2 | 1.53 |
| AC6-FMC-27-055 | ○ | 63 | 27 | 55 | 48 | 21 | 33.5 | 33 | M20x2 | 1.31 |
| AC6-FMC-27-100 | ○ | 63 | 27 | 100 | 48 | 21 | 33.5 | 78 | M20x2 | 1.91 |
| AC6-FMC-32-055 | ○ | 63 | 32 | 55 | 58 | 24 | 38 | 33 | M20x2 | 1.59 |
| AC6-FMC-40-060 | ○ | 63 | 40 | 60 | 70 | 27 | 41 | 38 | M20x2 | 2.18 |
| AC8-FMC-16-060 | ○ | 80 | 16 | 60 | 32 | 17 | 27 | 30 | M20x2 | 1.93 |
| AC8-FMC-22-060 | ○ | 80 | 22 | 60 | 40 | 19 | 31 | 30 | M20x2 | 2.06 |
| AC8-FMC-27-065 | ○ | 80 | 27 | 65 | 48 | 21 | 33.5 | 35 | M20x2 | 2.3 |
| AC8-FMC-32-065 | ○ | 80 | 32 | 65 | 58 | 24 | 38 | 35 | M20x2 | 2.6 |
| AC8-FMC-40-070 | ○ | 80 | 40 | 70 | 70 | 27 | 41 | 40 | M20x2 | 3.21 |

**Yedek Parça** / *Spare Part* / *Ersatzteile*

Sipariş Örneği/Ordering Example/*Bestellbeispiel*
1 ad./pcs./stück AC3-FMC-16-045

*Tarama Başlık Sıkma Civatası DIN 6367*
*Bolt For Shell Arbor DIN 6367*
*Scankopf-Klemmschraube DIN 6367*

*Tarama Başlık Civatası Sıkma Anahtarı DIN 6368*
*Wrench For Shell Arbor DIN 6368*
*Spannschlüssel DIN 6368 für Aufsteckdorne*

*Tırnaklı Pul DIN 6366*
*Clutch Drive Rings To DIN 6366*
*Mitnehmerringe DIN 6366*

*Kama DIN 6885*
*Drive Key DIN 6885*
*Paßfeder DIN 6885*

*Daha fazla bilgi için, 56-71. sayfalara bakabilirsiniz. / For more info, you can check pages between 56-71. / Weitere Informationen finden Sie auf den Seiten 56–71.*

● *Stokta / In Stock / Auf Lager* ○ *Stokta Yok / Non Stock Item / Kein Lagerartikel, Lieferzeit auf Anfrage*

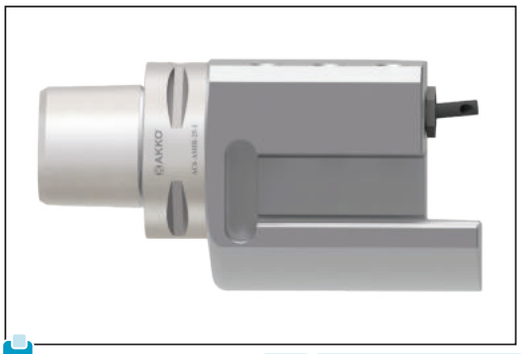

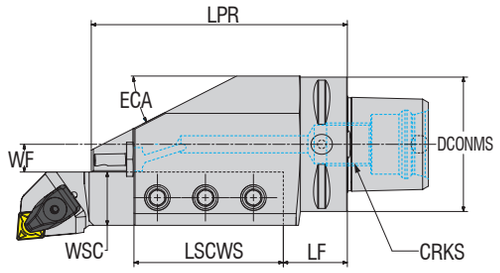


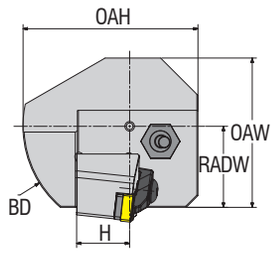


ISO 26623-1 | CHIP

| Sipariş Kodu *Ordering Code* *Bestell-Bezeichnung* | Stok *Stock* *Lager* | Tutucu Ölçüleri (mm) *Dimension (mm)* *Abmessung (mm)* | | | | | | | | | | | | | | |
|---|---|---|---|---|---|---|---|---|---|---|---|---|---|---|---|---|
| | | DCONMS | LPR | LSCWS | LF | WF | H | WSC | OAH | RADW | OAW | BD | ECA | HAND | CRKS | KG |
| **AC4-ASHR-1616-1-H** | ● | 40 | 104 | 70 | 29 | 7 | 16 | 16 | 48 | 23 | 43.5 | 60 | 30 | R | M14x1.5 | 1.5 |
| **AC5-ASHR-2020-1-H** | ● | 50 | 98 | 63.5 | 24.5 | 10 | 20 | 20 | 74 | 30 | 59 | 90 | 30 | R | M16x1.5 | 2.18 |
| **AC6-ASHR-2020-1-H** | ● | 63 | 100 | 63.5 | 26.5 | 10 | 20 | 20 | 74 | 30 | 59 | 90 | 30 | R | M20x2 | 2.51 |
| **AC6-ASHR-2525-1-H** | ● | 63 | 120 | 70 | 30 | 13 | 25 | 25 | 82 | 38 | 70 | 100 | 27 | R | M20x2 | 3.63 |
| **AC8-ASHR-3232-1-H** | ● | 80 | 140 | 90 | 40 | 8 | 32 | 32 | 87 | 40 | 80 | 109 | 27 | R | M20x2 | 6.64 |

● *Stokta / In Stock / Auf Lager* ○ *Stokta Yok / Non Stock Item / Kein Lagerartikel, Lieferzeit auf Anfrage*

Sipariş Örneği/Ordering Example/*Bestellbeispiel*
1 ad./pcs./stück AC4-ASHR-16-1

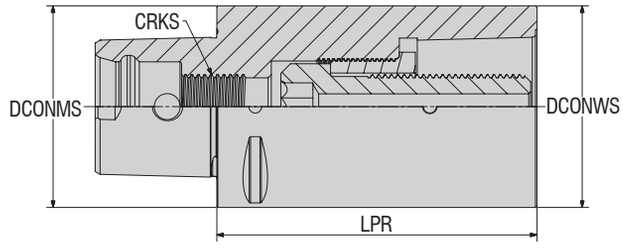


ISO 26623-1 | CHIP

| Sipariş Kodu<br>*Ordering Code*<br>*Bestell-Bezeichnung* | Stok<br>*Stock*<br>*Lager* | Tutucu Ölçüleri (mm)<br>*Dimension (mm)*<br>*Abmessung (mm)* | | | | |
|---|---|---|---|---|---|---|
| | | DCONMS | DCONWS | LPR | CRKS | KG |
| **AC6-EX-C6-100** | ● | 63 | 63 | 100 | M20 | 2.23 |

● *Stokta / In Stock / Auf Lager* ○ *Stokta Yok / Non Stock Item / Kein Lagerartikel, Lieferzeit auf Anfrage*

Sipariş Örneği/Ordering Example/*Bestellbeispiel*
1 ad./pcs./stück AC6-EX-C6-100

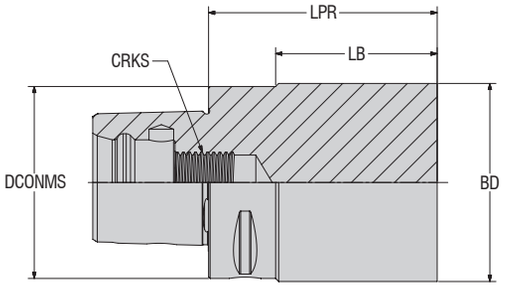


ISO 26623-1 CHIP

| Sipariş Kodu *Ordering Code* *Bestell-Bezeichnung* | Stok *Stock* *Lager* | BAĞLAMA ÖLÇÜSÜ *CONNECTION SIZE* *BINDUNGSGRÖSSE* | Tutucu Ölçüleri (mm) *Dimension (mm)* *Abmessung (mm)* | | | | | |
|---|---|---|---|---|---|---|---|---|
| | | | DCONMS | BD | LPR | LB | CRKS | KG |
| AC3-BL41-032-090 | ○ | | 32 | 32 | 90 | 75 | M12x1.5 | 0.6 |
| AC3-BL41-032-125 | ○ | C3 | 32 | 32 | 125 | 110 | M12x1.5 | 0.8 |
| AC3-BL41-060-090 | ○ | | 32 | 60 | 90 | 75 | M12x1.5 | 1.78 |
| AC4-BL41-040-045 | ○ | | 40 | 40 | 45 | 25 | M14x1.5 | 0.5 |
| AC4-BL41-040-165 | ○ | C4 | 40 | 40 | 165 | 145 | M14x1.5 | 1.67 |
| AC4-BL41-052-065 | ○ | | 40 | 52 | 65 | 45 | M14x1.5 | 0.99 |
| AC4-BL41-070-100 | ○ | | 40 | 70 | 100 | 80 | M14x1.5 | 2.61 |
| AC5-BL41-050-050 | ○ | | 50 | 50 | 50 | 30 | M16x1.5 | 0.9 |
| AC5-BL41-050-175 | ○ | C5 | 50 | 50 | 175 | 155 | M16x1.5 | 2.8 |
| AC5-BL41-075-070 | ○ | | 40 | 75 | 70 | 50 | M16x1.5 | 2.11 |
| AC5-BL41-075-175 | ○ | | 50 | 75 | 175 | 155 | M16x1.5 | 5.79 |
| AC6-BL41-063-048 | ○ | | 63 | 63 | 48 | 26 | M20X2 | 1.38 |
| AC6-BL41-063-100 | ○ | | 63 | 63 | 100 | 78 | M20X2 | 2.72 |
| AC6-BL41-063-195 | ○ | C6 | 63 | 63 | 195 | 175 | M20X2 | 4.96 |
| AC6-BL41-063-310 | ○ | | 63 | 63 | 310 | 288 | M20X2 | 7.75 |
| AC6-BL41-080-250 | ○ | | 63 | 80 | 250 | 228 | M20X2 | 9.66 |
| AC8-BL41-080-055 | ○ | C8 | 80 | 80 | 55 | 24 | M20X2 | 2.71 |
| AC8-BL41-120-160 | ○ | | 80 | 120 | 160 | 129 | M20X2 | 13.26 |

● *Stokta / In Stock / Auf Lager* ○ *Stokta Yok / Non Stock Item / Kein Lagerartikel, Lieferzeit auf Anfrage*

Sipariş Örneği/Ordering Example/*Bestellbeispiel*
1 ad./pcs./stück AC3-BL41-032-090

# MİNİ CUT TUTUCULAR

## *MINI CUT HOLDERS*

## *MINI-CUT-HALTER*

Teknik çizim ve fotoğraflar değişkenlik gösterebilir.
Illustrations shown may vary from actual product.
*Das Produkt kann von dem gezeigten Bild abweichen.*

AKKO®

konuşulan
the spoken kalite...
quality...

www.akko.com.tr

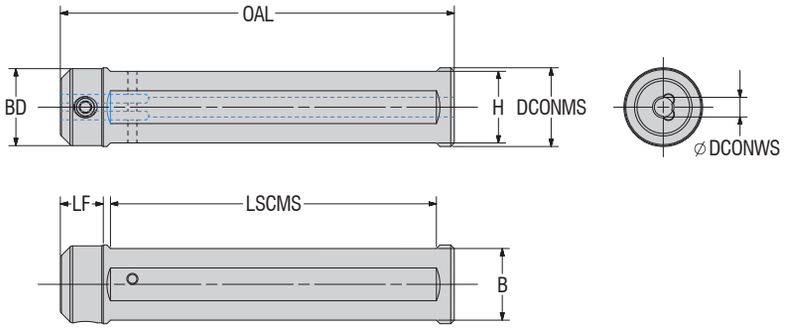


| Sipariş Kodu *Ordering Code* *Bestell-Bezeichnung* | Stok *Stock* *Lager* | Tutucu Ölçüleri (mm) *Dimension (mm)* *Abmessung (mm)* | | | | | | | |
|---|---|---|---|---|---|---|---|---|---|
| | | DCONWS | OAL | DCONMS | BD | LF | LSCMS | B | H |
| APCH-16-4-L110-H | ○ | 4 | 110 | 16 | - | - | 92 | 14 | 14 |
| APCH-16-5-L110-H | ○ | 5 | 110 | 16 | - | - | 92 | 14 | 14 |
| APCH-16-6-L110-H | ○ | 6 | 110 | 16 | 21 | 13 | 91 | 14 | 14 |
| APCH-16-7-L110-H | ○ | 7 | 110 | 16 | 21 | 13 | 91 | 14 | 14 |
| APCH-20-4-L110-H | ● | 4 | 110 | 20 | 19.50 | 11 | 91 | 18.80 | 18.80 |
| APCH-20-5-L110-H | ● | 5 | 110 | 20 | 19.50 | 11 | 91 | 18.80 | 18.80 |
| APCH-20-6-L110-H | ● | 6 | 110 | 20 | 19.50 | 11 | 91 | 18.80 | 18.80 |
| APCH-20-7-L110-H | ● | 7 | 110 | 20 | 19.50 | 11 | 91 | 18.80 | 18.80 |
| new APCH-20-8-L110-H | ● | 8 | 110 | 20 | 22.50 | 15 | 87 | 18.80 | 18.80 |
| new APCH-20-10-L110-H | ● | 10 | 110 | 20 | 26 | 15 | 98 | 18.80 | 18.80 |
| APCH-22-4-L110-H | ● | 4 | 110 | 22 | 21.50 | 12 | 91 | 20 | 20 |
| APCH-22-5-L110-H | ● | 5 | 110 | 22 | 21.50 | 12 | 91 | 20 | 20 |
| APCH-22-6-L110-H | ● | 6 | 110 | 22 | 21.50 | 12 | 91 | 20 | 20 |
| APCH-22-7-L110-H | ● | 7 | 110 | 22 | 21.50 | 12 | 91 | 20 | 20 |
| new APCH-22-8-L110-H | ● | 8 | 110 | 22 | 22.50 | 15 | 87 | 20 | 20 |
| new APCH-22-10-L110-H | ● | 10 | 110 | 22 | 26 | 15 | 87 | 20 | 20 |
| APCH-25-4-L110-H | ● | 4 | 110 | 25 | 24.50 | 12 | 91 | 23 | 23 |
| APCH-25-5-L110-H | ● | 5 | 110 | 25 | 24.50 | 12 | 91 | 23 | 23 |
| APCH-25-6-L110-H | ● | 6 | 110 | 25 | 24.50 | 12 | 91 | 23 | 23 |
| APCH-25-7-L110-H | ● | 7 | 110 | 25 | 24.50 | 12 | 91 | 23 | 23 |
| new APCH-25-8-L110-H | ● | 8 | 110 | 25 | 24.50 | 17 | 86 | 23 | 23 |
| new APCH-25-10-L110-H | ● | 10 | 110 | 25 | 26 | 15 | 87 | 23 | 23 |

**Yedek Parça** / *Spare Part* / *Ersatzteile*

● *Stokta / In Stock / Auf Lager* ○ *Stokta Yok / Non Stock Item / Kein Lagerartikel, Lieferzeit auf Anfrage*

*Mini Cut Sıkma Civatası*
*Mini Cut Screw*
*Mini Cut Spannbolzen*

*Mini Cut Merkezleme Pimi*
*Mini Cut Centering Pin*
*Mini Cut-Zentrierstift*

Sipariş Örneği/Ordering Example/*Bestellbeispiel*
1 ad./pcs./stück APCH-16-4-L110-H

*Daha fazla bilgi için, 56-71. sayfalara bakabilirsiniz. / For more info, you can check pages between 56-71. / Weitere Informationen finden Sie auf den Seiten 56–71.*

## VİDALI TAKIM TUTUCULARI
## *SCREWED TOOL HOLDERS*
## *AUFNAHME FÜR EINSCHRAUBFRÄSER*

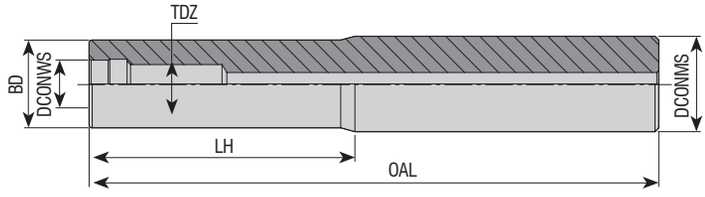


| Sipariş Kodu *Ordering Code* *Bestell-Bezeichnung* | Stok *Stock* *Lager* | Tutucu Ölçüleri (mm) *Dimension (mm)* *Abmessung (mm)* | | | | | |
|---|---|---|---|---|---|---|---|
| | | DCONMS | TDZ | DCONWS | BD | OAL | LH |
| AVTT-D13-C16-M08-L100-H | ● | 16 | M08 | 8.5 | 13 | 100 | 40 |
| AVTT-D15-C16-M08-L130-H | ● | 16 | M08 | 8.5 | 15 | 130 | 70 |
| AVTT-D18-C20-M10-L130-H | ● | 20 | M10 | 10.5 | 18 | 130 | 70 |
| AVTT-D18-C20-M10-L160-H | ● | 20 | M10 | 10.5 | 18 | 160 | 80 |
| AVTT-D23-C25-M12-L150-H | ● | 25 | M12 | 12.5 | 23 | 150 | 70 |
| AVTT-D23-C25-M12-L200-H | ● | 25 | M12 | 12.5 | 23 | 200 | 100 |
| AVTT-D23-C25-M12-L250-H | ● | 25 | M12 | 12.5 | 23 | 250 | 150 |
| AVTT-D30-C32-M16-L150-H | ● | 32 | M16 | 17 | 30 | 150 | 70 |
| AVTT-D30-C32-M16-L200-H | ● | 32 | M16 | 17 | 30 | 200 | 100 |
| AVTT-D30-C32-M16-L250-H | ● | 32 | M16 | 17 | 30 | 250 | 150 |
| AVTT-D30-C32-M16-L300-H | ● | 32 | M16 | 17 | 30 | 300 | 200 |

## DÖNER BROŞ AÇMA TAKIMLARI
## *ROTARY BROACH TOOL HOLDER*
## *HALTER FÜR ROTATİONSRÄUMWERKZEUGE*

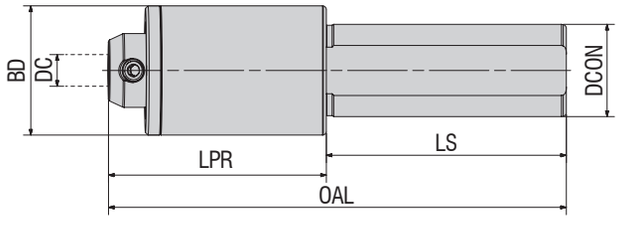


| Sipariş Kodu *Ordering Code* *Bestell-Bezeichnung* | Stok *Stock* *Lager* | Tutucu Ölçüleri (mm) *Dimension (mm)* *Abmessung (mm)* | | | | | | |
|---|---|---|---|---|---|---|---|---|
| | | BD | DC | WD | LPR | LS | OAL | DCON |
| new ABTH-D08-W22-L125 | ● | Ø35.00 | Ø8.00 | 15.00 | 60.00 | 65.00 | 125.00 | Ø22.00 |
| ABTH-D08-W25-L125 | ● | Ø35.00 | Ø8.00 | 15.00 | 60.00 | 65.00 | 125.00 | Ø25.00 |
| new ABTH-D10-W20-L125 | ● | Ø35.00 | Ø10.00 | 22.00 | 60.00 | 65.00 | 125.00 | Ø20.00 |
| new ABTH-D10-W22-L125 | ● | Ø35.00 | Ø10.00 | 22.00 | 60.00 | 65.00 | 125.00 | Ø22.00 |
| new ABTH-D10-W25-L125 | ● | Ø35.00 | Ø10.00 | 22.00 | 60.00 | 65.00 | 125.00 | Ø25.00 |
| new ABTH-D12-W25-L125 | ● | Ø53.00 | Ø12.00 | 22.00 | 70.00 | 65.00 | 157.00 | Ø25.00 |

Sipariş Örneği/Ordering Example/*Bestellbeispiel*
1 ad./pcs./stück AVTT-D13-C16-M08-L100-H

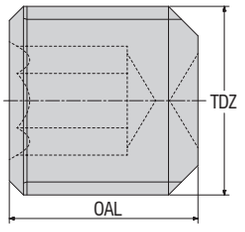


| Sipariş Kodu *Ordering Code* *Bestell-Bezeichnung* | VELDON SIKMA CİVATASI DIN 1835 B / *CLAMPING SCREW WELDON DIN 1835 B* / *WELDON-KLEMMSCHRAUBE DIN 1835 B* | | | | |
|---|---|---|---|---|---|
| | TDZ | OAL | SS | Ürün Detayı / *Product Detail* / *Produkt-Details* | |
| **2803-M6x9** | M6 | 9 | 6 | VELDON TUTUCULARI İÇİN / *FOR WELDON HOLDERS* / *FÜR VELDON HALTER* | EM6 |
| **2804-M8x9** | M8 | 9 | 8 | VELDON TUTUCULARI İÇİN / *FOR WELDON HOLDERS* / *FÜR VELDON HALTER* | EM8 |
| **2805-M10x12** | M10 | 12 | 10 | VELDON TUTUCULARI İÇİN / *FOR WELDON HOLDERS* / *FÜR VELDON HALTER* | EM10 |
| **2806-M12x14** | M12 | 14 | 12.14 | VELDON TUTUCULARI İÇİN / *FOR WELDON HOLDERS* / *FÜR VELDON HALTER* | EM12, EM14 |
| **2806-M14x16** | M14 | 16 | 16.18 | VELDON TUTUCULARI İÇİN / *FOR WELDON HOLDERS* / *FÜR VELDON HALTER* | EM16, EM18 |
| **2808-M16x16** | M16 | 16 | 20 | VELDON TUTUCULARI İÇİN / *FOR WELDON HOLDERS* / *FÜR VELDON HALTER* | EM20 |
| **2810-M18x20** | M18 | 20 | 25 | VELDON TUTUCULARI İÇİN / *FOR WELDON HOLDERS* / *FÜR VELDON HALTER* | EM25 |
| **2810-M20x20** | M20 | 20 | 32.40 | VELDON TUTUCULARI İÇİN / *FOR WELDON HOLDERS* / *FÜR VELDON HALTER* | EM32, EM40 |
| **2812-M24x25** | M24 | 25 | 50 | VELDON TUTUCULARI İÇİN / *FOR WELDON HOLDERS* / *FÜR VELDON HALTER* | EM50 |

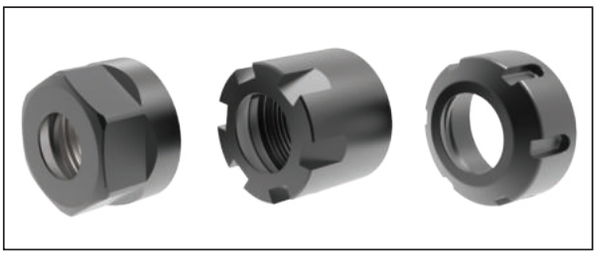

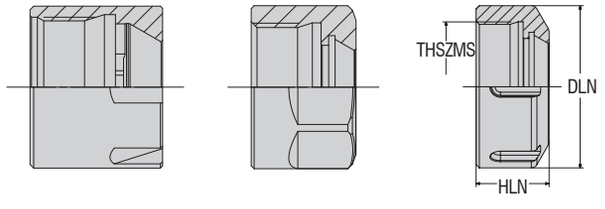


ER 11, 16, 20, 25 Mini — ER 16, 20 — ER 25, 32, 40, 50

| Sipariş Kodu *Ordering Code* *Bestell-Bezeichnung* | PENS KAPAKLARI / *CLAMPING NUTS* / *SPANNMUTTER* | | | | | |
|---|---|---|---|---|---|---|
| | DLN | HLN | THSZMS | N·m | Ürün Detayı / *Product Detail* / *Produkt-Details* | |
| **ANUT-ER11-M** | 16.00 | 12.00 | M13x0.75 | 29.4 | PENS TUTUCULARI İÇİN / *FOR COLLET CHUCK HOLDERS* / *FÜR SPANNZANGEAUFNAHME* | ER11-M |
| **ANUT-ER16-M** | 22.00 | 18.00 | M19x1.0 | 39.2 | PENS TUTUCULARI İÇİN / *FOR COLLET CHUCK HOLDERS* / *FÜR SPANNZANGEAUFNAHME* | ER16-M |
| **ANUT-ER16** | 28.00 | 17.00 | M22x1.5 | 68.7 | PENS TUTUCULARI İÇİN / *FOR COLLET CHUCK HOLDERS* / *FÜR SPANNZANGEAUFNAHME* | ER16 |
| **ANUT-ER20-M** | 28.00 | 19.00 | M24X1.0 | 78.5 | PENS TUTUCULARI İÇİN / *FOR COLLET CHUCK HOLDERS* / *FÜR SPANNZANGEAUFNAHME* | ER20-M |
| **ANUT-ER20** | 34.00 | 19.00 | M25x1.5 | 117.7 | PENS TUTUCULARI İÇİN / *FOR COLLET CHUCK HOLDERS* / *FÜR SPANNZANGEAUFNAHME* | ER20 |
| **ANUT-ER25-M** | 35.00 | 20.00 | M30x1.0 | 98.1 | PENS TUTUCULARI İÇİN / *FOR COLLET CHUCK HOLDERS* / *FÜR SPANNZANGEAUFNAHME* | ER25-M |
| **ANUT-ER25** | 42.00 | 20.00 | M32x1.5 | 196.2 | PENS TUTUCULARI İÇİN / *FOR COLLET CHUCK HOLDERS* / *FÜR SPANNZANGEAUFNAHME* | ER25 |
| **ANUT-ER32** | 50.00 | 22.00 | M40x1.5 | 215.8 | PENS TUTUCULARI İÇİN / *FOR COLLET CHUCK HOLDERS* / *FÜR SPANNZANGEAUFNAHME* | ER32 |
| **ANUT-ER40** | 63.00 | 25.00 | M50x1.5 | 245.3 | PENS TUTUCULARI İÇİN / *FOR COLLET CHUCK HOLDERS* / *FÜR SPANNZANGEAUFNAHME* | ER40 |
| **ANUT-ER50** | 78.00 | 35.00 | M64x2.0 | 343.4 | PENS TUTUCULARI İÇİN / *FOR COLLET CHUCK HOLDERS* / *FÜR SPANNZANGEAUFNAHME* | ER50 |

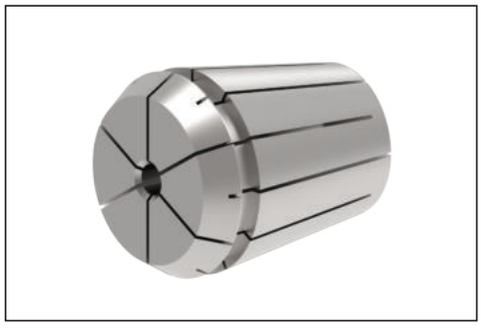

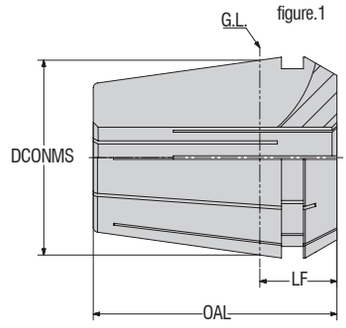


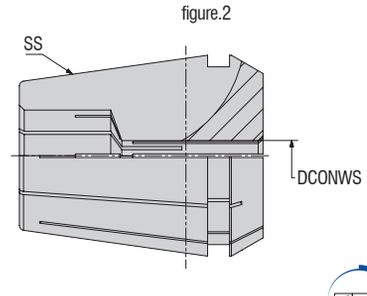


0.003

| Sipariş Kodu *Ordering Code* *Bestell-Bezeichnung* | PENSLER ER DIN 6499 B/ISO 15488-B Formu ER 11-B / *COLLET CHUCK ER DIN 6499 B/ISO 15488-B FORM ER 11-B* / *SPANNZANGEN DIN 6499 B/ISO 15488-B Form ER 11-B* | | | | | | |
|---|---|---|---|---|---|---|---|
| | SS | DCONWS | DCONMS | LF | OAL | Fig. | Ürün Detayı / *Product Detail* / *Produkt-Details* |
| **ER-11S-01** | ER11 | 1 | 11 | 6.3 | 18 | 2 | ER11 PENS TUTUCULAR İÇİN / ER11 FOR COLLET CHUCKS / *FÜR ER11 STIFTHALTER* |
| **ER-11S-015** | ER11 | 1.5 | 11 | 6.3 | 18 | 2 | ER11 PENS TUTUCULAR İÇİN / ER11 FOR COLLET CHUCKS / *FÜR ER11 STIFTHALTER* |
| **ER-11S-02** | ER11 | 2 | 11 | 6.3 | 18 | 2 | ER11 PENS TUTUCULAR İÇİN / ER11 FOR COLLET CHUCKS / *FÜR ER11 STIFTHALTER* |
| **ER-11S-025** | ER11 | 2.5 | 11 | 6.3 | 18 | 2 | ER11 PENS TUTUCULAR İÇİN / ER11 FOR COLLET CHUCKS / *FÜR ER11 STIFTHALTER* |
| **ER-11S-03** | ER11 | 3 | 11 | 6.3 | 18 | 1 | ER11 PENS TUTUCULAR İÇİN / ER11 FOR COLLET CHUCKS / *FÜR ER11 STIFTHALTER* |
| **ER-11S-04** | ER11 | 4 | 11 | 6.3 | 18 | 1 | ER11 PENS TUTUCULAR İÇİN / ER11 FOR COLLET CHUCKS / *FÜR ER11 STIFTHALTER* |
| **ER-11S-05** | ER11 | 5 | 11 | 6.3 | 18 | 1 | ER11 PENS TUTUCULAR İÇİN / ER11 FOR COLLET CHUCKS / *FÜR ER11 STIFTHALTER* |
| **ER-11S-055** | ER11 | 5.5 | 11 | 6.3 | 18 | 1 | ER11 PENS TUTUCULAR İÇİN / ER11 FOR COLLET CHUCKS / *FÜR ER11 STIFTHALTER* |
| **ER-11S-06** | ER11 | 6 | 11 | 6.3 | 18 | 1 | ER11 PENS TUTUCULAR İÇİN / ER11 FOR COLLET CHUCKS / *FÜR ER11 STIFTHALTER* |
| **ER-11S-065** | ER11 | 6.5 | 11 | 6.3 | 18 | 1 | ER11 PENS TUTUCULAR İÇİN / ER11 FOR COLLET CHUCKS / *FÜR ER11 STIFTHALTER* |
| **ER-11S-07** | ER11 | 7 | 11 | 6.3 | 18 | 1 | ER11 PENS TUTUCULAR İÇİN / ER11 FOR COLLET CHUCKS / *FÜR ER11 STIFTHALTER* |

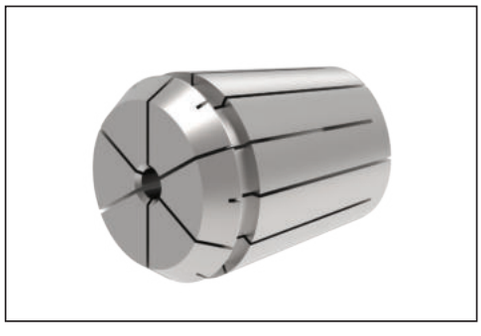

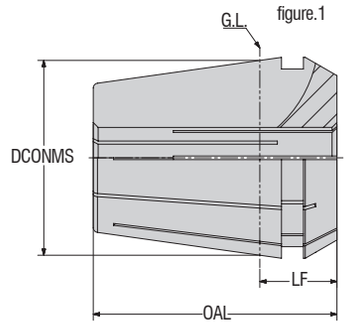


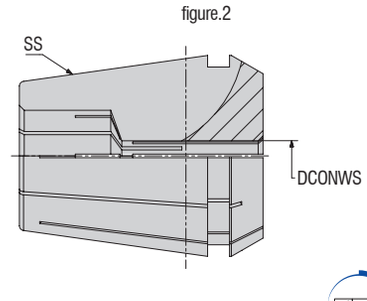


0.003

| Sipariş Kodu *Ordering Code* *Bestell-Bezeichnung* | PENSLER ER DIN 6499 B/ISO 15488-B Formu ER 16-B / *COLLET CHUCK ER DIN 6499 B/ISO 15488-B FORM ER 16-B* / *SPANNZANGEN DIN 6499 B/ISO 15488-B Form ER 16-B* | | | | | | |
|---|---|---|---|---|---|---|---|
| | SS | DCONWS | DCONMS | LF | OAL | Fig. | Ürün Detayı / *Product Detail* / *Produkt-Details* |
| **ER-16S-01** | ER16 | 1 | 16 | 10.26 | 27.5 | 2 | ER16 PENS TUTUCULAR İÇİN / ER16 FOR COLLET CHUCKS / *FÜR ER16 STIFTHALTER* |
| **ER-16S-02** | ER16 | 2 | 16 | 10.26 | 27.5 | 2 | ER16 PENS TUTUCULAR İÇİN / ER16 FOR COLLET CHUCKS / *FÜR ER16 STIFTHALTER* |
| **ER-16S-03** | ER16 | 3 | 16 | 10.26 | 27.5 | 2 | ER16 PENS TUTUCULAR İÇİN / ER16 FOR COLLET CHUCKS / *FÜR ER16 STIFTHALTER* |
| **ER-16S-04** | ER16 | 4 | 16 | 10.26 | 27.5 | 2 | ER16 PENS TUTUCULAR İÇİN / ER16 FOR COLLET CHUCKS / *FÜR ER16 STIFTHALTER* |
| **ER-16S-05** | ER16 | 5 | 16 | 10.26 | 27.5 | 1 | ER16 PENS TUTUCULAR İÇİN / ER16 FOR COLLET CHUCKS / *FÜR ER16 STIFTHALTER* |
| **ER-16S-06** | ER16 | 6 | 16 | 10.26 | 27.5 | 1 | ER16 PENS TUTUCULAR İÇİN / ER16 FOR COLLET CHUCKS / *FÜR ER16 STIFTHALTER* |
| **ER-16S-07** | ER16 | 7 | 16 | 10.26 | 27.5 | 1 | ER16 PENS TUTUCULAR İÇİN / ER16 FOR COLLET CHUCKS / *FÜR ER16 STIFTHALTER* |
| **ER-16S-08** | ER16 | 8 | 16 | 10.26 | 27.5 | 1 | ER16 PENS TUTUCULAR İÇİN / ER16 FOR COLLET CHUCKS / *FÜR ER16 STIFTHALTER* |
| **ER-16S-09** | ER16 | 9 | 16 | 10.26 | 27.5 | 1 | ER16 PENS TUTUCULAR İÇİN / ER16 FOR COLLET CHUCKS / *FÜR ER16 STIFTHALTER* |
| **ER-16S-10** | ER16 | 10 | 16 | 10.26 | 27.5 | 1 | ER16 PENS TUTUCULAR İÇİN / ER16 FOR COLLET CHUCKS / *FÜR ER16 STIFTHALTER* |

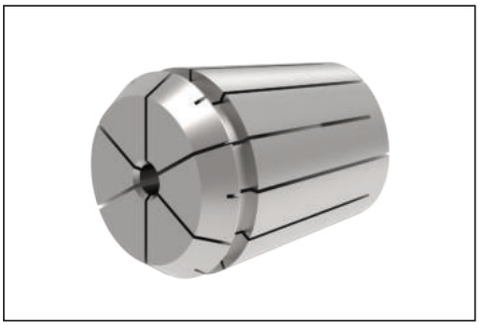

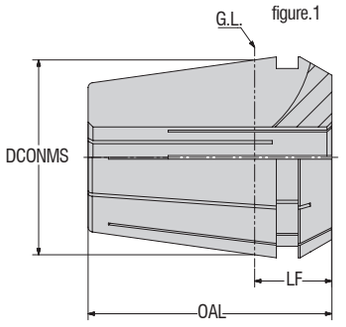


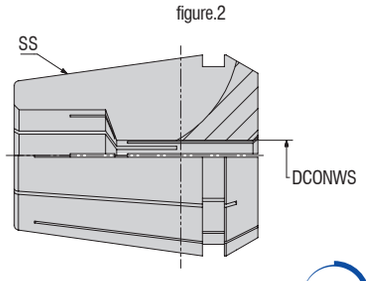


0.003

| Sipariş Kodu *Ordering Code* *Bestell-Bezeichnung* | PENSLER ER DIN 6499 B/ISO 15488-B Formu ER 20-B / *COLLET CHUCK ER DIN 6499 B/ISO 15488-B FORM ER 20-B* / *SPANNZANGEN DIN 6499 B/ISO 15488-B Form ER 20-B* | | | | | | |
|---|---|---|---|---|---|---|---|
| | SS | DCONWS | DCONMS | LF | OAL | Fig. | Ürün Detayı / *Product Detail* / *Produkt-Details* |
| **ER-20S-02** | ER20 | 2 | 20 | 11.16 | 31.5 | 2 | ER20 PENS TUTUCULAR İÇİN / ER20 FOR COLLET CHUCKS / *FÜR ER20 STIFTHALTER* |
| **ER-20S-03** | ER20 | 3 | 20 | 11.16 | 31.5 | 2 | ER20 PENS TUTUCULAR İÇİN / ER20 FOR COLLET CHUCKS / *FÜR ER20 STIFTHALTER* |
| **ER-20S-04** | ER20 | 4 | 20 | 11.16 | 31.5 | 2 | ER20 PENS TUTUCULAR İÇİN / ER20 FOR COLLET CHUCKS / *FÜR ER20 STIFTHALTER* |
| **ER-20S-05** | ER20 | 5 | 20 | 11.16 | 31.5 | 2 | ER20 PENS TUTUCULAR İÇİN / ER20 FOR COLLET CHUCKS / *FÜR ER20 STIFTHALTER* |
| **ER-20S-06** | ER20 | 6 | 20 | 11.16 | 31.5 | 2 | ER20 PENS TUTUCULAR İÇİN / ER20 FOR COLLET CHUCKS / *FÜR ER20 STIFTHALTER* |
| **ER-20S-07** | ER20 | 7 | 20 | 11.16 | 31.5 | 2 | ER20 PENS TUTUCULAR İÇİN / ER20 FOR COLLET CHUCKS / *FÜR ER20 STIFTHALTER* |
| **ER-20S-08** | ER20 | 8 | 20 | 11.16 | 31.5 | 1 | ER20 PENS TUTUCULAR İÇİN / ER20 FOR COLLET CHUCKS / *FÜR ER20 STIFTHALTER* |
| **ER-20S-09** | ER20 | 9 | 20 | 11.16 | 31.5 | 1 | ER20 PENS TUTUCULAR İÇİN / ER20 FOR COLLET CHUCKS / *FÜR ER20 STIFTHALTER* |
| **ER-20S-10** | ER20 | 10 | 20 | 11.16 | 31.5 | 1 | ER20 PENS TUTUCULAR İÇİN / ER20 FOR COLLET CHUCKS / *FÜR ER20 STIFTHALTER* |
| **ER-20S-11** | ER20 | 11 | 20 | 11.16 | 31.5 | 1 | ER20 PENS TUTUCULAR İÇİN / ER20 FOR COLLET CHUCKS / *FÜR ER20 STIFTHALTER* |
| **ER-20S-12** | ER20 | 12 | 20 | 11.16 | 31.5 | 1 | ER20 PENS TUTUCULAR İÇİN / ER20 FOR COLLET CHUCKS / *FÜR ER20 STIFTHALTER* |
| **ER-20S-13** | ER20 | 13 | 20 | 11.16 | 31.5 | 1 | ER20 PENS TUTUCULAR İÇİN / ER20 FOR COLLET CHUCKS / *FÜR ER20 STIFTHALTER* |

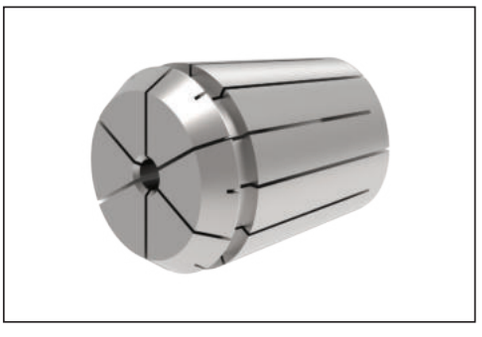

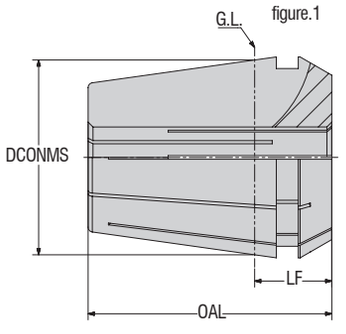


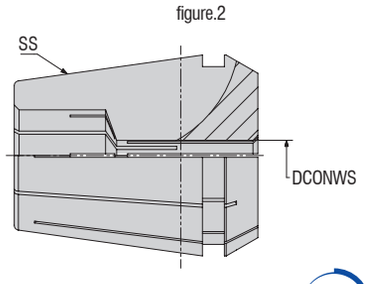


0.003

| Sipariş Kodu *Ordering Code* *Bestell-Bezeichnung* | PENSLER ER DIN 6499 B/ISO 15488-B Formu ER 32-B / *COLLET CHUCK ER DIN 6499 B/ISO 15488-B FORM ER 32-B* / *SPANNZANGEN DIN 6499 B/ISO 15488-B Form ER 32-B* | | | | | | |
|---|---|---|---|---|---|---|---|
| | SS | DCONWS | DCONMS | LF | OAL | Fig. | Ürün Detayı / *Product Detail* / *Produkt-Details* |
| **ER-32S-02** | ER32 | 2 | 32 | 12.66 | 40 | 2 | ER32 PENS TUTUCULAR İÇİN / ER32 FOR COLLET CHUCKS / *FÜR ER32 STIFTHALTER* |
| **ER-32S-03** | ER32 | 3 | 32 | 12.66 | 40 | 2 | ER32 PENS TUTUCULAR İÇİN / ER32 FOR COLLET CHUCKS / *FÜR ER32 STIFTHALTER* |
| **ER-32S-04** | ER32 | 4 | 32 | 12.66 | 40 | 2 | ER32 PENS TUTUCULAR İÇİN / ER32 FOR COLLET CHUCKS / *FÜR ER32 STIFTHALTER* |
| **ER-32S-05** | ER32 | 5 | 32 | 12.66 | 40 | 2 | ER32 PENS TUTUCULAR İÇİN / ER32 FOR COLLET CHUCKS / *FÜR ER32 STIFTHALTER* |
| **ER-32S-06** | ER32 | 6 | 32 | 12.66 | 40 | 2 | ER32 PENS TUTUCULAR İÇİN / ER32 FOR COLLET CHUCKS / *FÜR ER32 STIFTHALTER* |
| **ER-32S-07** | ER32 | 7 | 32 | 12.66 | 40 | 2 | ER32 PENS TUTUCULAR İÇİN / ER32 FOR COLLET CHUCKS / *FÜR ER32 STIFTHALTER* |
| **ER-32S-08** | ER32 | 8 | 32 | 12.66 | 40 | 1 | ER32 PENS TUTUCULAR İÇİN / ER32 FOR COLLET CHUCKS / *FÜR ER32 STIFTHALTER* |
| **ER-32S-09** | ER32 | 9 | 32 | 12.66 | 40 | 1 | ER32 PENS TUTUCULAR İÇİN / ER32 FOR COLLET CHUCKS / *FÜR ER32 STIFTHALTER* |
| **ER-32S-10** | ER32 | 10 | 32 | 12.66 | 40 | 1 | ER32 PENS TUTUCULAR İÇİN / ER32 FOR COLLET CHUCKS / *FÜR ER32 STIFTHALTER* |
| **ER-32S-11** | ER32 | 11 | 32 | 12.66 | 40 | 1 | ER32 PENS TUTUCULAR İÇİN / ER32 FOR COLLET CHUCKS / *FÜR ER32 STIFTHALTER* |
| **ER-32S-12** | ER32 | 12 | 32 | 12.66 | 40 | 1 | ER32 PENS TUTUCULAR İÇİN / ER32 FOR COLLET CHUCKS / *FÜR ER32 STIFTHALTER* |
| **ER-32S-13** | ER32 | 13 | 32 | 12.66 | 40 | 1 | ER32 PENS TUTUCULAR İÇİN / ER32 FOR COLLET CHUCKS / *FÜR ER32 STIFTHALTER* |
| **ER-32S-14** | ER32 | 14 | 32 | 12.66 | 40 | 1 | ER32 PENS TUTUCULAR İÇİN / ER32 FOR COLLET CHUCKS / *FÜR ER32 STIFTHALTER* |
| **ER-32S-15** | ER32 | 15 | 32 | 12.66 | 40 | 1 | ER32 PENS TUTUCULAR İÇİN / ER32 FOR COLLET CHUCKS / *FÜR ER32 STIFTHALTER* |
| **ER-32S-16** | ER32 | 16 | 32 | 12.66 | 40 | 1 | ER32 PENS TUTUCULAR İÇİN / ER32 FOR COLLET CHUCKS / *FÜR ER32 STIFTHALTER* |
| **ER-32S-17** | ER32 | 17 | 32 | 12.66 | 40 | 1 | ER32 PENS TUTUCULAR İÇİN / ER32 FOR COLLET CHUCKS / *FÜR ER32 STIFTHALTER* |
| **ER-32S-18** | ER32 | 18 | 32 | 12.66 | 40 | 1 | ER32 PENS TUTUCULAR İÇİN / ER32 FOR COLLET CHUCKS / *FÜR ER32 STIFTHALTER* |
| **ER-32S-19** | ER32 | 19 | 32 | 12.66 | 40 | 1 | ER32 PENS TUTUCULAR İÇİN / ER32 FOR COLLET CHUCKS / *FÜR ER32 STIFTHALTER* |
| **ER-32S-20** | ER32 | 20 | 32 | 12.66 | 40 | 1 | ER32 PENS TUTUCULAR İÇİN / ER32 FOR COLLET CHUCKS / *FÜR ER32 STIFTHALTER* |

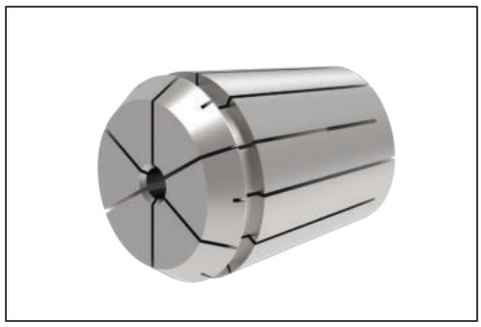

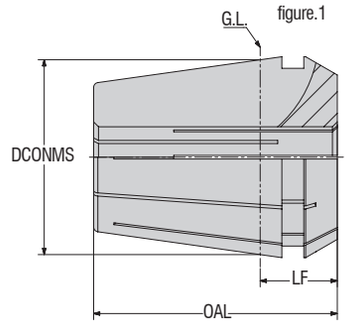


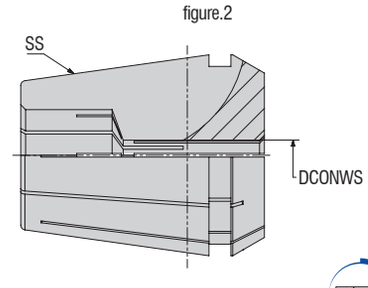


0.003

| Sipariş Kodu *Ordering Code* *Bestell-Bezeichnung* | PENSLER ER DIN 6499 B/ISO 15488-B Formu ER 40-B / *COLLET CHUCK ER DIN 6499 B/ISO 15488-B FORM ER 40-B* / *SPANNZANGEN DIN 6499 B/ISO 15488-B Form ER 40-B* | | | | | | |
|---|---|---|---|---|---|---|---|
| | SS | DCONWS | DCONMS | LF | OAL | Fig. | Ürün Detayı / *Product Detail* / *Produkt-Details* |
| **ER-40S-03** | ER40 | 3 | 40 | 14.66 | 46 | 2 | ER40 PENS TUTUCULAR İÇİN / ER40 FOR COLLET CHUCKS / *FÜR ER40 STIFTHALTER* |
| **ER-40S-04** | ER40 | 4 | 40 | 14.66 | 46 | 2 | ER40 PENS TUTUCULAR İÇİN / ER40 FOR COLLET CHUCKS / *FÜR ER40 STIFTHALTER* |
| **ER-40S-05** | ER40 | 5 | 40 | 14.66 | 46 | 2 | ER40 PENS TUTUCULAR İÇİN / ER40 FOR COLLET CHUCKS / *FÜR ER40 STIFTHALTER* |
| **ER-40S-06** | ER40 | 6 | 40 | 14.66 | 46 | 2 | ER40 PENS TUTUCULAR İÇİN / ER40 FOR COLLET CHUCKS / *FÜR ER40 STIFTHALTER* |
| **ER-40S-07** | ER40 | 7 | 40 | 14.66 | 46 | 2 | ER40 PENS TUTUCULAR İÇİN / ER40 FOR COLLET CHUCKS / *FÜR ER40 STIFTHALTER* |
| **ER-40S-08** | ER40 | 8 | 40 | 14.66 | 46 | 2 | ER40 PENS TUTUCULAR İÇİN / ER40 FOR COLLET CHUCKS / *FÜR ER40 STIFTHALTER* |
| **ER-40S-09** | ER40 | 9 | 40 | 14.66 | 46 | 1 | ER40 PENS TUTUCULAR İÇİN / ER40 FOR COLLET CHUCKS / *FÜR ER40 STIFTHALTER* |
| **ER-40S-10** | ER40 | 10 | 40 | 14.66 | 46 | 1 | ER40 PENS TUTUCULAR İÇİN / ER40 FOR COLLET CHUCKS / *FÜR ER40 STIFTHALTER* |
| **ER-40S-11** | ER40 | 11 | 40 | 14.66 | 46 | 1 | ER40 PENS TUTUCULAR İÇİN / ER40 FOR COLLET CHUCKS / *FÜR ER40 STIFTHALTER* |
| **ER-40S-12** | ER40 | 12 | 40 | 14.66 | 46 | 1 | ER40 PENS TUTUCULAR İÇİN / ER40 FOR COLLET CHUCKS / *FÜR ER40 STIFTHALTER* |
| **ER-40S-13** | ER40 | 13 | 40 | 14.66 | 46 | 1 | ER40 PENS TUTUCULAR İÇİN / ER40 FOR COLLET CHUCKS / *FÜR ER40 STIFTHALTER* |
| **ER-40S-14** | ER40 | 14 | 40 | 14.66 | 46 | 1 | ER40 PENS TUTUCULAR İÇİN / ER40 FOR COLLET CHUCKS / *FÜR ER40 STIFTHALTER* |
| **ER-40S-15** | ER40 | 15 | 40 | 14.66 | 46 | 1 | ER40 PENS TUTUCULAR İÇİN / ER40 FOR COLLET CHUCKS / *FÜR ER40 STIFTHALTER* |
| **ER-40S-16** | ER40 | 16 | 40 | 14.66 | 46 | 1 | ER40 PENS TUTUCULAR İÇİN / ER40 FOR COLLET CHUCKS / *FÜR ER40 STIFTHALTER* |
| **ER-40S-17** | ER40 | 17 | 40 | 14.66 | 46 | 1 | ER40 PENS TUTUCULAR İÇİN / ER40 FOR COLLET CHUCKS / *FÜR ER40 STIFTHALTER* |
| **ER-40S-18** | ER40 | 18 | 40 | 14.66 | 46 | 1 | ER40 PENS TUTUCULAR İÇİN / ER40 FOR COLLET CHUCKS / *FÜR ER40 STIFTHALTER* |
| **ER-40S-19** | ER40 | 19 | 40 | 14.66 | 46 | 1 | ER40 PENS TUTUCULAR İÇİN / ER40 FOR COLLET CHUCKS / *FÜR ER40 STIFTHALTER* |
| **ER-40S-20** | ER40 | 20 | 40 | 14.66 | 46 | 1 | ER40 PENS TUTUCULAR İÇİN / ER40 FOR COLLET CHUCKS / *FÜR ER40 STIFTHALTER* |
| **ER-40S-21** | ER40 | 21 | 40 | 14.66 | 46 | 1 | ER40 PENS TUTUCULAR İÇİN / ER40 FOR COLLET CHUCKS / *FÜR ER40 STIFTHALTER* |
| **ER-40S-22** | ER40 | 22 | 40 | 14.66 | 46 | 1 | ER40 PENS TUTUCULAR İÇİN / ER40 FOR COLLET CHUCKS / *FÜR ER40 STIFTHALTER* |
| **ER-40S-23** | ER40 | 23 | 40 | 14.66 | 46 | 1 | ER40 PENS TUTUCULAR İÇİN / ER40 FOR COLLET CHUCKS / *FÜR ER40 STIFTHALTER* |
| **ER-40S-24** | ER40 | 24 | 40 | 14.66 | 46 | 1 | ER40 PENS TUTUCULAR İÇİN / ER40 FOR COLLET CHUCKS / *FÜR ER40 STIFTHALTER* |
| **ER-40S-25** | ER40 | 25 | 40 | 14.66 | 46 | 1 | ER40 PENS TUTUCULAR İÇİN / ER40 FOR COLLET CHUCKS / *FÜR ER40 STIFTHALTER* |
| **ER-40S-26** | ER40 | 26 | 40 | 14.66 | 46 | 1 | ER40 PENS TUTUCULAR İÇİN / ER40 FOR COLLET CHUCKS / *FÜR ER40 STIFTHALTER* |

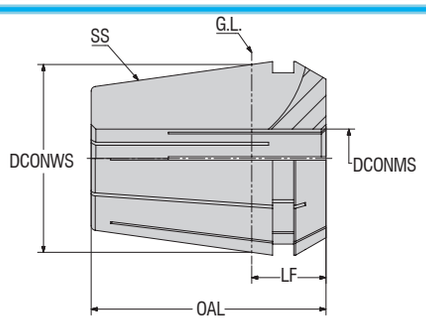


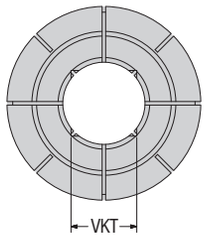


0.003

**Sipariş Kodu**
***Ordering Code***
*Bestell-Bezeichnung*

KILAVUZ PENSİ İÇTEN SOĞUTMALI SİSTEMLER İÇİN KEÇELİ TİP, ER DIN 6499 A FORMU
*/ TAP COLLET COOLANT THRU SYSTEMS FOR SEALING TYPE, ER DIN 6499 A FORM / DICHTUNGSTYP FÜR INNENKÜHLSYSTEME, FORM ER DIN 6499 A*

| | SS | DCONWS | DCONMS | LF | OAL | VKT | Ürün Detayı / *Product Detail* / *Produkt-Details* |
|---|---|---|---|---|---|---|---|
| **ER-16T-03527** | ER16 | 3.5 | 16 | 6,3 | 27.5 | 2.7 | ER16 PENS TUTUCULAR İÇİN / ER16 FOR COLLET CHUCKS / *FÜR ER16 STIFTHALTER* |
| **ER-16T-04032** | ER16 | 4 | 16 | 6,3 | 27.5 | 3.2 | ER16 PENS TUTUCULAR İÇİN / ER16 FOR COLLET CHUCKS / *FÜR ER16 STIFTHALTER* |
| **ER-16T-04534** | ER16 | 4.5 | 16 | 6,3 | 27.5 | 3.4 | ER16 PENS TUTUCULAR İÇİN / ER16 FOR COLLET CHUCKS / *FÜR ER16 STIFTHALTER* |
| **ER-16T-06049** | ER16 | 6 | 16 | 6,3 | 27.5 | 4.9 | ER16 PENS TUTUCULAR İÇİN / ER16 FOR COLLET CHUCKS / *FÜR ER16 STIFTHALTER* |
| **ER-16T-07055** | ER16 | 7 | 16 | 6,3 | 27.5 | 5.5 | ER16 PENS TUTUCULAR İÇİN / ER16 FOR COLLET CHUCKS / *FÜR ER16 STIFTHALTER* |
| **ER-16T-08063** | ER16 | 8 | 16 | 6,3 | 27.5 | 6.3 | ER16 PENS TUTUCULAR İÇİN / ER16 FOR COLLET CHUCKS / *FÜR ER16 STIFTHALTER* |
| **ER-16T-09071** | ER16 | 9 | 16 | 6,3 | 27.5 | 7.1 | ER16 PENS TUTUCULAR İÇİN / ER16 FOR COLLET CHUCKS / *FÜR ER16 STIFTHALTER* |
| **ER-20T-03527** | ER20 | 3.5 | 20 | 7,2 | 31.5 | 2.7 | ER20 PENS TUTUCULAR İÇİN / ER20 FOR COLLET CHUCKS / *FÜR ER20 STIFTHALTER* |
| **ER-20T-04032** | ER20 | 4 | 20 | 7,2 | 31.5 | 3.2 | ER20 PENS TUTUCULAR İÇİN / ER20 FOR COLLET CHUCKS / *FÜR ER20 STIFTHALTER* |
| **ER-20T-04534** | ER20 | 4.5 | 20 | 7,2 | 31.5 | 3.4 | ER20 PENS TUTUCULAR İÇİN / ER20 FOR COLLET CHUCKS / *FÜR ER20 STIFTHALTER* |
| **ER-20T-06049** | ER20 | 6 | 20 | 7,2 | 31.5 | 4.9 | ER20 PENS TUTUCULAR İÇİN / ER20 FOR COLLET CHUCKS / *FÜR ER20 STIFTHALTER* |
| **ER-20T-07055** | ER20 | 7 | 20 | 7,2 | 31.5 | 5.5 | ER20 PENS TUTUCULAR İÇİN / ER20 FOR COLLET CHUCKS / *FÜR ER20 STIFTHALTER* |
| **ER-20T-08063** | ER20 | 8 | 20 | 7,2 | 31.5 | 6.3 | ER20 PENS TUTUCULAR İÇİN / ER20 FOR COLLET CHUCKS / *FÜR ER20 STIFTHALTER* |
| **ER-20T-09071** | ER20 | 9 | 20 | 7,2 | 31.5 | 7.1 | ER20 PENS TUTUCULAR İÇİN / ER20 FOR COLLET CHUCKS / *FÜR ER20 STIFTHALTER* |
| **ER-20T-10080** | ER20 | 10 | 20 | 7,2 | 31.5 | 8 | ER20 PENS TUTUCULAR İÇİN / ER20 FOR COLLET CHUCKS / *FÜR ER20 STIFTHALTER* |
| **ER-20T-11090** | ER20 | 11 | 20 | 7,2 | 31.5 | 9 | ER20 PENS TUTUCULAR İÇİN / ER20 FOR COLLET CHUCKS / *FÜR ER20 STIFTHALTER* |
| **ER-20T-12090** | ER20 | 12 | 20 | 7,2 | 31.5 | 9 | ER20 PENS TUTUCULAR İÇİN / ER20 FOR COLLET CHUCKS / *FÜR ER20 STIFTHALTER* |
| **ER-25T-03527** | ER25 | 3.5 | 25 | 7,5 | 34 | 2.7 | ER25 PENS TUTUCULAR İÇİN / ER25 FOR COLLET CHUCKS / *FÜR ER25 STIFTHALTER* |
| **ER-25T-04032** | ER25 | 4 | 25 | 7,5 | 34 | 3.2 | ER25 PENS TUTUCULAR İÇİN / ER25 FOR COLLET CHUCKS / *FÜR ER25 STIFTHALTER* |
| **ER-25T-04534** | ER25 | 4.5 | 25 | 7,5 | 34 | 3.4 | ER25 PENS TUTUCULAR İÇİN / ER25 FOR COLLET CHUCKS / *FÜR ER25 STIFTHALTER* |
| **ER-25T-06049** | ER25 | 6 | 25 | 7,5 | 34 | 4.9 | ER25 PENS TUTUCULAR İÇİN / ER25 FOR COLLET CHUCKS / *FÜR ER25 STIFTHALTER* |
| **ER-25T-07055** | ER25 | 7 | 25 | 7,5 | 34 | 5.5 | ER25 PENS TUTUCULAR İÇİN / ER25 FOR COLLET CHUCKS / *FÜR ER25 STIFTHALTER* |
| **ER-25T-08063** | ER25 | 8 | 25 | 7,5 | 34 | 6.3 | ER25 PENS TUTUCULAR İÇİN / ER25 FOR COLLET CHUCKS / *FÜR ER25 STIFTHALTER* |
| **ER-25T-09071** | ER25 | 9 | 25 | 7,5 | 34 | 7.1 | ER25 PENS TUTUCULAR İÇİN / ER25 FOR COLLET CHUCKS / *FÜR ER25 STIFTHALTER* |
| **ER-25T-10080** | ER25 | 10 | 25 | 7,5 | 34 | 8 | ER25 PENS TUTUCULAR İÇİN / ER25 FOR COLLET CHUCKS / *FÜR ER25 STIFTHALTER* |
| **ER-25T-11090** | ER25 | 11 | 25 | 7,5 | 34 | 9 | ER25 PENS TUTUCULAR İÇİN / ER25 FOR COLLET CHUCKS / *FÜR ER25 STIFTHALTER* |
| **ER-25T-12090** | ER25 | 12 | 25 | 7,5 | 34 | 9 | ER25 PENS TUTUCULAR İÇİN / ER25 FOR COLLET CHUCKS / *FÜR ER25 STIFTHALTER* |
| **ER-25T-14112** | ER25 | 14 | 25 | 7,5 | 34 | 11.2 | ER25 PENS TUTUCULAR İÇİN / ER25 FOR COLLET CHUCKS / *FÜR ER25 STIFTHALTER* |
| **ER-25T-16125** | ER25 | 16 | 25 | 7,5 | 34 | 12.5 | ER25 PENS TUTUCULAR İÇİN / ER25 FOR COLLET CHUCKS / *FÜR ER25 STIFTHALTER* |
| **ER-32T-04032** | ER32 | 4 | 32 | 8,2 | 40 | 3.2 | ER32 PENS TUTUCULAR İÇİN / ER32 FOR COLLET CHUCKS / *FÜR ER32 STIFTHALTER* |
| **ER-32T-04534** | ER32 | 4.5 | 32 | 8,2 | 40 | 3.4 | ER32 PENS TUTUCULAR İÇİN / ER32 FOR COLLET CHUCKS / *FÜR ER32 STIFTHALTER* |
| **ER-32T-06049** | ER32 | 6 | 32 | 8,2 | 40 | 4.9 | ER32 PENS TUTUCULAR İÇİN / ER32 FOR COLLET CHUCKS / *FÜR ER32 STIFTHALTER* |
| **ER-32T-07055** | ER32 | 7 | 32 | 8,2 | 40 | 5.5 | ER32 PENS TUTUCULAR İÇİN / ER32 FOR COLLET CHUCKS / *FÜR ER32 STIFTHALTER* |
| **ER-32T-08063** | ER32 | 8 | 32 | 8,2 | 40 | 6.3 | ER32 PENS TUTUCULAR İÇİN / ER32 FOR COLLET CHUCKS / *FÜR ER32 STIFTHALTER* |
| **ER-32T-09071** | ER32 | 9 | 32 | 8,2 | 40 | 7.1 | ER32 PENS TUTUCULAR İÇİN / ER32 FOR COLLET CHUCKS / *FÜR ER32 STIFTHALTER* |
| **ER-32T-10080** | ER32 | 10 | 32 | 8,2 | 40 | 8 | ER32 PENS TUTUCULAR İÇİN / ER32 FOR COLLET CHUCKS / *FÜR ER32 STIFTHALTER* |
| **ER-32T-11090** | ER32 | 11 | 32 | 8,2 | 40 | 9 | ER32 PENS TUTUCULAR İÇİN / ER32 FOR COLLET CHUCKS / *FÜR ER32 STIFTHALTER* |
| **ER-32T-12090** | ER32 | 12 | 32 | 8,2 | 40 | 9 | ER32 PENS TUTUCULAR İÇİN / ER32 FOR COLLET CHUCKS / *FÜR ER32 STIFTHALTER* |
| **ER-32T-14112** | ER32 | 14 | 32 | 8,2 | 40 | 11.2 | ER32 PENS TUTUCULAR İÇİN / ER32 FOR COLLET CHUCKS / *FÜR ER32 STIFTHALTER* |
| **ER-32T-16125** | ER32 | 16 | 32 | 8,2 | 40 | 12.5 | ER32 PENS TUTUCULAR İÇİN / ER32 FOR COLLET CHUCKS / *FÜR ER32 STIFTHALTER* |
| **ER-32T-18145** | ER32 | 18 | 32 | 8,2 | 40 | 14.5 | ER32 PENS TUTUCULAR İÇİN / ER32 FOR COLLET CHUCKS / *FÜR ER32 STIFTHALTER* |
| **ER-32T-20160** | ER32 | 20 | 32 | 8,2 | 40 | 16 | ER32 PENS TUTUCULAR İÇİN / ER32 FOR COLLET CHUCKS / *FÜR ER32 STIFTHALTER* |
| **ER-40T-06049** | ER40 | 6 | 40 | 10,5 | 46 | 4.9 | ER40 PENS TUTUCULAR İÇİN / ER40 FOR COLLET CHUCKS / *FÜR ER40 STIFTHALTER* |
| **ER-40T-07055** | ER40 | 7 | 40 | 10,5 | 46 | 5.5 | ER40 PENS TUTUCULAR İÇİN / ER40 FOR COLLET CHUCKS / *FÜR ER40 STIFTHALTER* |
| **ER-40T-08063** | ER40 | 8 | 40 | 10,5 | 46 | 6.3 | ER40 PENS TUTUCULAR İÇİN / ER40 FOR COLLET CHUCKS / *FÜR ER40 STIFTHALTER* |
| **ER-40T-09071** | ER40 | 9 | 40 | 10,5 | 46 | 7.1 | ER40 PENS TUTUCULAR İÇİN / ER40 FOR COLLET CHUCKS / *FÜR ER40 STIFTHALTER* |
| **ER-40T-10080** | ER40 | 10 | 40 | 10,5 | 46 | 8 | ER40 PENS TUTUCULAR İÇİN / ER40 FOR COLLET CHUCKS / *FÜR ER40 STIFTHALTER* |
| **ER-40T-11090** | ER40 | 11 | 40 | 10,5 | 46 | 9 | ER40 PENS TUTUCULAR İÇİN / ER40 FOR COLLET CHUCKS / *FÜR ER40 STIFTHALTER* |
| **ER-40T-12090** | ER40 | 12 | 40 | 10,5 | 46 | 9 | ER40 PENS TUTUCULAR İÇİN / ER40 FOR COLLET CHUCKS / *FÜR ER40 STIFTHALTER* |
| **ER-40T-14112** | ER40 | 14 | 40 | 10,5 | 46 | 11.2 | ER40 PENS TUTUCULAR İÇİN / ER40 FOR COLLET CHUCKS / *FÜR ER40 STIFTHALTER* |
| **ER-40T-16125** | ER40 | 16 | 40 | 10,5 | 46 | 12.5 | ER40 PENS TUTUCULAR İÇİN / ER40 FOR COLLET CHUCKS / *FÜR ER40 STIFTHALTER* |
| **ER-40T-18145** | ER40 | 18 | 40 | 10,5 | 46 | 14.5 | ER40 PENS TUTUCULAR İÇİN / ER40 FOR COLLET CHUCKS / *FÜR ER40 STIFTHALTER* |
| **ER-40T-20160** | ER40 | 20 | 40 | 10,5 | 46 | 16 | ER40 PENS TUTUCULAR İÇİN / ER40 FOR COLLET CHUCKS / *FÜR ER40 STIFTHALTER* |
| **ER-40T-22180** | ER40 | 22 | 40 | 10,5 | 46 | 18 | ER40 PENS TUTUCULAR İÇİN / ER40 FOR COLLET CHUCKS / *FÜR ER40 STIFTHALTER* |
| **ER-40T-25200** | ER40 | 25 | 40 | 10,5 | 46 | 20 | ER40 PENS TUTUCULAR İÇİN / ER40 FOR COLLET CHUCKS / *FÜR ER40 STIFTHALTER* |

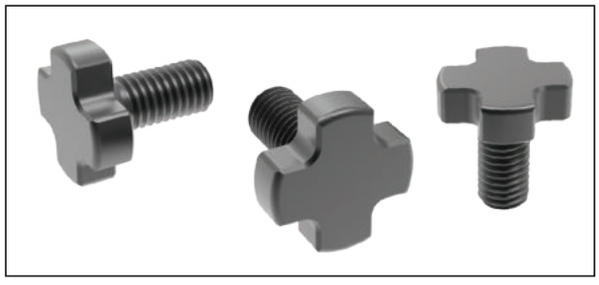

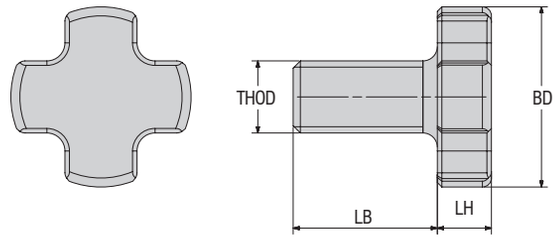


| Sipariş Kodu *Ordering Code* *Bestell-Bezeichnung* | TARAMA BAŞLIK SIKMA CİVATASI DIN 6367 / *BOLT FOR SHELL ARBOR DIN 6367* / *SCANKOPF-KLEMMSCHRAUBE DIN 6367* | | | | | |
|---|---|---|---|---|---|---|
| | THOD | BD | LH | LB | Ürün Detayı / *Product Detail* / *Produkt-Details* | |
| **2400-M8x16** | M08 | 20.00 | 6.0 | 16.00 | YÜZEY FREZE TAKIM TUTUCULARI İÇİN / FOR FACE MILLING TOOL HOLDERS / *FÜR PLANFRÄSE HALTER* | FM-16 |
| **2500-M10x18** | M10 | 28.00 | 7.0 | 18.00 | YÜZEY FREZE TAKIM TUTUCULARI İÇİN / FOR FACE MILLING TOOL HOLDERS / *FÜR PLANFRÄSE HALTER* | FM-22 |
| **2500-M12x22** | M12 | 35.00 | 9.0 | 22.00 | YÜZEY FREZE TAKIM TUTUCULARI İÇİN / FOR FACE MILLING TOOL HOLDERS / *FÜR PLANFRÄSE HALTER* | FM-27 |
| **2500-M16x26** | M12 | 35.00 | 8.0 | 22.00 | YÜZEY FREZE TAKIM TUTUCULARI İÇİN / FOR FACE MILLING TOOL HOLDERS / *FÜR PLANFRÄSE HALTER* | FM-32 |
| **2500-M20x30** | M16 | 42.00 | 9.0 | 26.00 | YÜZEY FREZE TAKIM TUTUCULARI İÇİN / FOR FACE MILLING TOOL HOLDERS / *FÜR PLANFRÄSE HALTER* | FM-40 |
| **2500-M24X36** | M24 | 63.00 | 12.0 | 36.00 | YÜZEY FREZE TAKIM TUTUCULARI İÇİN / FOR FACE MILLING TOOL HOLDERS / *FÜR PLANFRÄSE HALTER* | FM-50 |

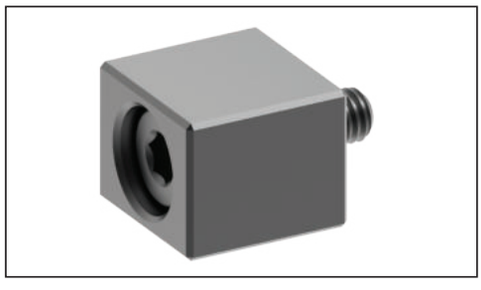

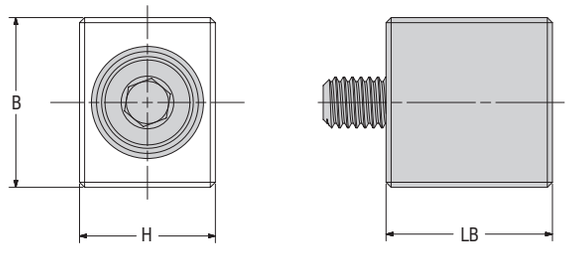


| Sipariş Kodu *Ordering Code* *Bestell-Bezeichnung* | ALIN KAMALI MALAFA KAMASI / *DRIVE KEY* / *MITNEHMERSTEINE MIT SCHRAUBE* | | | | | |
|---|---|---|---|---|---|---|
| | B | H | LB | SCREW | Ürün Detayı / *Product Detail* / *Produkt-Details* | |
| **AHW-16-01** | 10 | 8 | 10 | M3x12 | YÜZEY FREZE TAKIM TUTUCULARI İÇİN / *FOR FACE MILLING TOOL HOLDERS* / *FÜR PLANFRÄSE HALTER* | FM-16 |
| **AHW-22-01** | 11 | 10 | 11.20 | M4x12 | YÜZEY FREZE TAKIM TUTUCULARI İÇİN / *FOR FACE MILLING TOOL HOLDERS* / *FÜR PLANFRÄSE HALTER* | FM-22 |
| **AHW-27-01** | 14 | 12 | 12.60 | M4x15 | YÜZEY FREZE TAKIM TUTUCULARI İÇİN / *FOR FACE MILLING TOOL HOLDERS* / *FÜR PLANFRÄSE HALTER* | FM-27 |
| **AHW-32-01** | 21 | 14 | 14 | M5x16 | YÜZEY FREZE TAKIM TUTUCULARI İÇİN / *FOR FACE MILLING TOOL HOLDERS* / *FÜR PLANFRÄSE HALTER* | FM-32 |
| **AHW-40-01** | 21 | 16 | 16 | M5x16 | YÜZEY FREZE TAKIM TUTUCULARI İÇİN / *FOR FACE MILLING TOOL HOLDERS* / *FÜR PLANFRÄSE HALTER* | FM-40 |

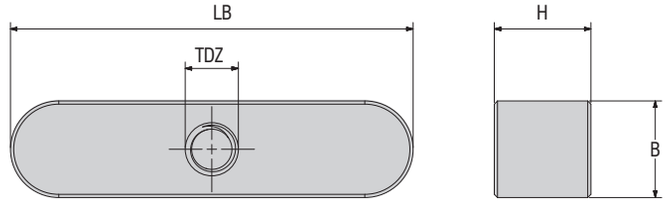


| Sipariş Kodu *Ordering Code* *Bestell-Bezeichnung* | KAMA DIN 6885 / *DRIVE KEY DIN 6885* / *FAßEDER DIN 6885* | | | | |
|---|---|---|---|---|---|
| | B | H | LB | SCREW | Ürün Detayı / *Product Detail* / *Produkt-Details* |
| **AHW-16-4x4x20** | 4 | 4 | 20 | M2x4 | KOMBİNE YÜZEY FREZE TUTUCULAR İÇİN / FOR COMBI SHELL MILL HOLDER / *FÜR KOMBINIERTE FLÄCHENFRÄSHALTER* |
| **AHW-22-6x6x25** | 6 | 6 | 25 | M3x5 | KOMBİNE YÜZEY FREZE TUTUCULAR İÇİN / FOR COMBI SHELL MILL HOLDER / *FÜR KOMBINIERTE FLÄCHENFRÄSHALTER* |
| **AHW-27-7x7x25** | 7 | 7 | 25 | M3x6 | KOMBİNE YÜZEY FREZE TUTUCULAR İÇİN / FOR COMBI SHELL MILL HOLDER / *FÜR KOMBINIERTE FLÄCHENFRÄSHALTER* |
| **AHW-32-8x7x28** | 8 | 7 | 28 | M3x6 | KOMBİNE YÜZEY FREZE TUTUCULAR İÇİN / FOR COMBI SHELL MILL HOLDER / *FÜR KOMBINIERTE FLÄCHENFRÄSHALTER* |
| **AHW-40-10x8x32** | 10 | 8 | 32 | M3x6 | KOMBİNE YÜZEY FREZE TUTUCULAR İÇİN / FOR COMBI SHELL MILL HOLDER / *FÜR KOMBINIERTE FLÄCHENFRÄSHALTER* |

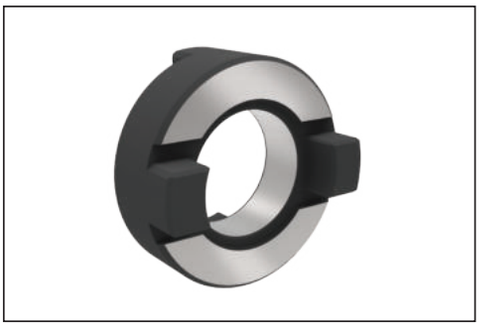

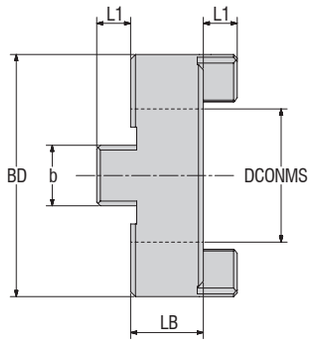


| Sipariş Kodu *Ordering Code* *Bestell-Bezeichnung* | TIRNAKLI PUL DIN 6366 / *CLUTCH DRIVE RINGS TO DIN 6366* / *MİTNEHMERRİNGE DIN 6366* | | | | | |
|---|---|---|---|---|---|---|
| | BD | DCONMS | LB | b | L1 | Ürün Detayı / *Product Detail* / *Produkt-Details* |
| **ADR-FMC-16** | 32 | 16 | 10 | 8 | 5 | KOMBİNE YÜZEY FREZE TUTUCULAR İÇİN / FOR COMBI SHELL MILL HOLDER / *FÜR KOMBINIERTE FLÄCHENFRÄSHALTER* |
| **ADR-FMC-22** | 40 | 22 | 12 | 10 | 5.6 | KOMBİNE YÜZEY FREZE TUTUCULAR İÇİN / FOR COMBI SHELL MILL HOLDER / *FÜR KOMBINIERTE FLÄCHENFRÄSHALTER* |
| **ADR-FMC-27** | 48 | 27 | 12 | 12 | 6.3 | KOMBİNE YÜZEY FREZE TUTUCULAR İÇİN / FOR COMBI SHELL MILL HOLDER / *FÜR KOMBINIERTE FLÄCHENFRÄSHALTER* |
| **ADR-FMC-32** | 58 | 32 | 14 | 14 | 7 | KOMBİNE YÜZEY FREZE TUTUCULAR İÇİN / FOR COMBI SHELL MILL HOLDER / *FÜR KOMBINIERTE FLÄCHENFRÄSHALTER* |
| **ADR-FMC-40** | 70 | 40 | 14 | 16 | 8 | KOMBİNE YÜZEY FREZE TUTUCULAR İÇİN / FOR COMBI SHELL MILL HOLDER / *FÜR KOMBINIERTE FLÄCHENFRÄSHALTER* |

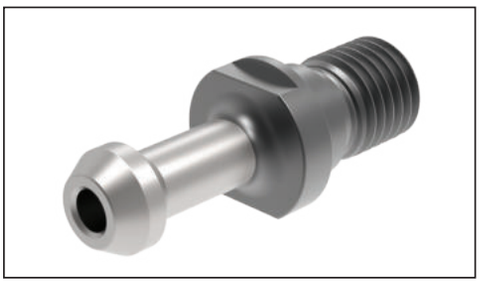

FİG. 1

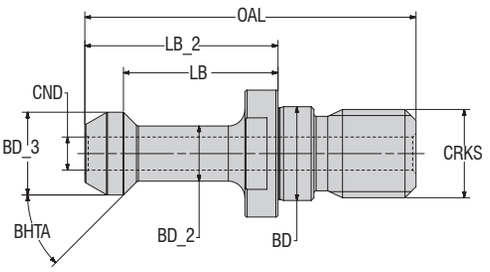


FİG. 2

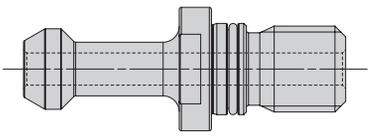

| Sipariş Kodu *Ordering Code* *Bestell-Bezeichnung* | JIS B 6339 (MAS 403 BT) ÇEKTİRME CİVATASI / *PULL STUD* / *ANZUGSBOLZEN* | | | | | | | | | | | |
|---|---|---|---|---|---|---|---|---|---|---|---|---|
| | SS | CRKS | BD_3 | BD_2 | BD | CND | LB | OAL | LB_2 | BHTA | Fig. | Ürün Detayı / *Product Detail* / *Produkt-Details* |
| **APS-BT30-45-M12-JIS-O-H** | 30 | M12 | 11 | 8 | 12.50 | 2.50 | 18 | 43 | 23 | 45 | 2. | ABT30 TUTUCULARI İÇİN - JIS FORMU / *FOR ABT30 HOLDERS - JIS FORM / FÜR ABT30 HALTER – JIS FORMULAR* |
| **APS-BT30-45-M12-JIS** | 30 | M12 | 11 | 7 | 12.50 | - | 18 | 43 | 23 | 45 | 1. | ABT30 TUTUCULARI İÇİN - JIS FORMU / *FOR ABT30 HOLDERS - JIS FORM / FÜR ABT30 HALTER – JIS FORMULAR* |
| **APS-BT40-45-M16-JIS-O** | 40 | M16 | 15 | 10 | 17 | - | 28 | 60 | 35 | 45 | 2. | ABT40 TUTUCULARI İÇİN - JIS FORMU / *FOR ABT40 HOLDERS - JIS FORM / FÜR ABT40 HALTER – JIS FORMULAR* |
| **APS-BT50-45-M24-JIS-O** | 50 | M24 | 23 | 17 | 25 | - | 35 | 85 | 45 | 45 | 2. | ABT50 TUTUCULARI İÇİN - JIS FORMU / *FOR ABT50 HOLDERS - JIS FORM / FÜR ABT50 HALTER – JIS FORMULARFORMULAR* |
| **APS-BT50-45-M24-JIS-O-H** | 50 | M24 | 23 | 17 | 25 | 6 | 35 | 85 | 45 | 45 | 2. | ABT50 TUTUCULARI İÇİN - JIS FORMU / *FOR ABT50 HOLDERS - JIS FORM / FÜR ABT50 HALTER – JIS FORMULAR* |
| **APS-BT30-60-M12-JIS** | 30 | M12 | 11 | 7 | 12.50 | - | 18 | 43 | 23 | 60 | 1. | ABT30 TUTUCULARI İÇİN - JIS FORMU / *FOR ABT30 HOLDERS - JIS FORM / FÜR ABT30 HALTER – JIS FORMULAR* |
| **APS-BT40-45-M16-JIS-O-H** | 40 | M16 | 15 | 10 | 17 | 3 | 28 | 60 | 35 | 45 | 2. | ABT40 TUTUCULARI İÇİN - JIS FORMU / *FOR ABT40 HOLDERS - JIS FORM / FÜR ABT40 HALTER – JIS FORMULAR* |
| **APS-BT40-60-M16-JIS-O-H** | 40 | M16 | 15 | 10 | 17 | 3 | 28 | 60 | 35 | 60 | 2. | ABT40 TUTUCULARI İÇİN - JIS FORMU / *FOR ABT40 HOLDERS - JIS FORM / FÜR ABT40 HALTER – JIS FORMULAR* |
| **APS-BT50-60-M24-JIS-O** | 50 | M24 | 23 | 17 | 25 | - | 35 | 85 | 45 | 60 | 2. | ABT50 TUTUCULARI İÇİN - JIS FORMU / *FOR ABT50 HOLDERS - JIS FORM / FÜR ABT50 HALTER – JIS FORMULAR* |
| **APS-BT50-60-M24-JIS-O-H** | 50 | M24 | 23 | 17 | 25 | 6 | 35 | 85 | 45 | 60 | 2. | ABT50 TUTUCULARI İÇİN - JIS FORMU / *FOR ABT50 HOLDERS - JIS FORM / FÜR ABT50 HALTER – JIS FORMULAR* |
| **APS-BT40-90-M16-JIS-O** | 40 | M16 | 15 | 10 | 17 | - | 28 | 60 | 35 | 90 | 2. | ABT40 TUTUCULARI İÇİN - JIS FORMU / *FOR ABT40 HOLDERS - JIS FORM / FÜR ABT40 HALTER – JIS FORMULAR* |
| **APS-BT40-90-M16-JIS-O-H** | 40 | M16 | 15 | 10 | 17 | 3 | 28 | 60 | 35 | 90 | 2. | ABT40 TUTUCULARI İÇİN - JIS FORMU / *FOR ABT40 HOLDERS - JIS FORM / FÜR ABT40 HALTER – JIS FORMULAR* |
| **APS-BT50-90-M24-JIS-O** | 50 | M24 | 23 | 17 | 25 | - | 35 | 85 | 45 | 90 | 2. | ABT50 TUTUCULARI İÇİN - JIS FORMU / *FOR ABT50 HOLDERS - JIS FORM / FÜR ABT50 HALTER – JIS FORMULAR* |
| **APS-BT50-90-M24-JIS-O-H** | 50 | M24 | 23 | 17 | 25 | 6 | 35 | 85 | 45 | 90 | 2. | ABT50 TUTUCULARI İÇİN - JIS FORMU / *FOR ABT50 HOLDERS - JIS FORM / FÜR ABT50 HALTER – JIS FORMULAR* |

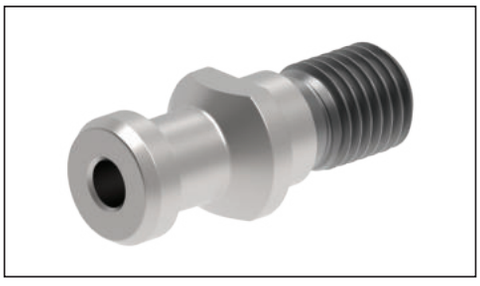

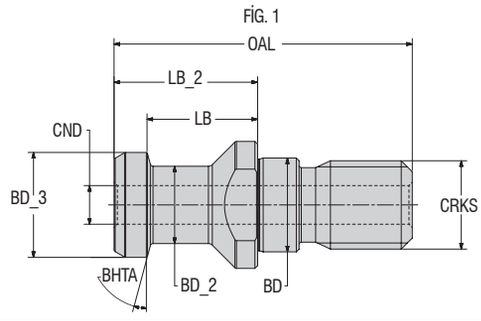


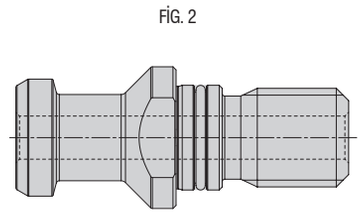


## DIN 69872-A ÇEKTİRME CİVATASI / *PULL STUD* / *ANZUGSBOLZEN*

| Sipariş Kodu *Ordering Code* *Bestell-Bezeichnung* | SS | CRKS | BD_3 | BD_2 | BD | CND | LB | OAL | LB_2 | BHTA | Fig. | Ürün Detayı / *Product Detail* / *Produkt-Details* |
|---|---|---|---|---|---|---|---|---|---|---|---|---|
| **APS-BT40-15-M16-DIN-O-H** | 40 | M16 | 19 | 14 | 17 | 7 | 23 | 54 | 29 | 15 | 2. | ABT40 TUTUCULARI İÇİN - DIN FORMU /FOR ABT40 HOLDERS - DIN FORM / *FÜR ABT40 HALTER – DIN FORMULAR* |
| **APS-SK40-15-M16-DIN-O-H** | 40 | M16 | 19 | 14 | 17 | 7 | 20 | 54 | 26 | 15 | 2. | ASK40 TUTUCULARI İÇİN - DIN FORMU /FOR ASK40 HOLDERS - DIN FORM / *FÜR ABT40 HALTER – DIN FORMULAR* |
| **APS-SK40-15-M16-DIN-O** | 40 | M16 | 19 | 14 | 17 | - | 20 | 54 | 26 | 15 | 2. | ASK40 TUTUCULARI İÇİN - DIN FORMU /FOR ASK40 HOLDERS - DIN FORM / *FÜR ABT40 HALTER – DIN FORMULAR* |
| **APS-BT40-15-M16-OKU-O-H** | 40 | M16 | 19 | 14 | 17 | 4 | 23 | 54 | 29 | 15 | 2. | ABT40 TUTUCULARI İÇİN - DIN FORMU /FOR ABT40 HOLDERS - DIN FORM / *FÜR ABT40 HALTER – DIN FORMULAR - OKUMA* |
| **APS-SK50-15-M24-DIN-O-H** | 50 | M24 | 28 | 21 | 25 | 11.50 | 25 | 74 | 34 | 15 | 2. | ASK50 TUTUCULARI İÇİN - DIN FORMU /FOR ASK50 HOLDERS - DIN FORM / *FÜR ABT50 HALTER – DIN FORMULAR* |
| **APS-SK50-15-M24-DIN-O** | 50 | M24 | 28 | 21 | 25 | - | 25 | 74 | 34 | 15 | 2. | ASK50 TUTUCULARI İÇİN - DIN FORMU /FOR ASK50 HOLDERS - DIN FORM / *FÜR ABT50 HALTER – DIN FORMULAR* |

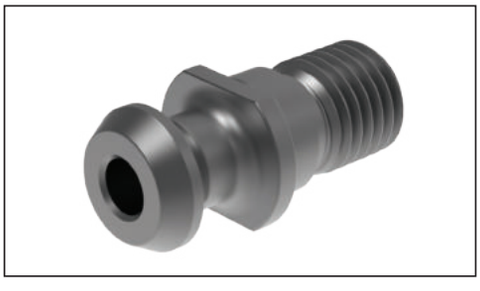

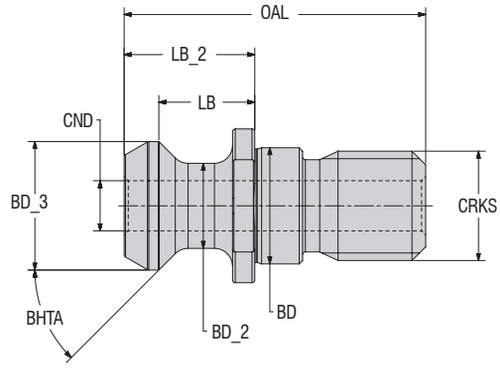


## ISO 7388-CAT ÇEKTİRME CİVATASI / *PULL STUD* / *ANZUGSBOLZEN*

| Sipariş Kodu *Ordering Code* *Bestell-Bezeichnung* | SS | CRKS | BD_3 | BD_2 | BD | CND | LB | OAL | LB_2 | BHTA | Ürün Detayı / *Product Detail* / *Produkt-Details* |
|---|---|---|---|---|---|---|---|---|---|---|---|
| **APS-BT40-45-M16-MAZ-H** | 40 | M16 | 18.80 | 12.45 | 17 | 7.35 | 14.03 | 44.11 | 19.11 | 45 | ABT40 TUTUCULARI İÇİN - MAZAK / *FOR ABT40 HOLDERS - MAZAK/ FÜR ABT40 HALTER – MAZAK* |
| **APS-CAT40-45-M16-MAZ-H** | 40 | M16 | 18.80 | 12.45 | 17 | 7.35 | 11.18 | 41.26 | 16.40 | 45 | CAT 40 TUTUCULARI İÇİN - MAZAK / *FOR CAT40 HOLDERS - MAZAK/ FÜR ABT40 HALTER – MAZAK* |

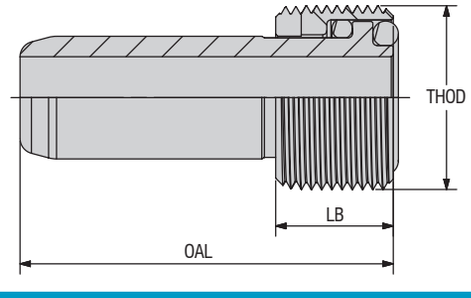


## SOĞUTMA SUYU ÜNİTESİ / *COOLING TUBES* / *KÜHLMITTELEINHEIT*

| Sipariş Kodu *Ordering Code* *Bestell-Bezeichnung* | OAL | LB | THOD | Ürün Detayı / *Product Detail* / *Produkt-Details* | |
|---|---|---|---|---|---|
| **AHSK32-CT** | 26 | 5.5 | M10x1 | AHSK TAKIM TUTUCULARI İÇİN / *FOR AHSK TOOL HOLDERS / FÜR AHSK WERKZEUGHALTER* | AHSK32 |
| **AHSK40-CT** | 29.5 | 7.5 | M12x1 | AHSK TAKIM TUTUCULARI İÇİN / *FOR AHSK TOOL HOLDERS / FÜR AHSK WERKZEUGHALTER* | AHSK40 |
| **AHSK50-CT** | 33 | 9.5 | M16x1 | AHSK TAKIM TUTUCULARI İÇİN / *FOR AHSK TOOL HOLDERS / FÜR AHSK WERKZEUGHALTER* | AHSK50 |
| **AHSK63-CT** | 36.5 | 11.5 | M18x1 | AHSK TAKIM TUTUCULARI İÇİN / *FOR AHSK TOOL HOLDERS / FÜR AHSK WERKZEUGHALTER* | AHSK63 |
| **AHSK80-CT** | 40 | 13.5 | M20x1.5 | AHSK TAKIM TUTUCULARI İÇİN / *FOR AHSK TOOL HOLDERS / FÜR AHSK WERKZEUGHALTER* | AHSK80 |
| **AHSK100-CT** | 44 | 15.5 | M24x1.5 | AHSK TAKIM TUTUCULARI İÇİN / *FOR AHSK TOOL HOLDERS / FÜR AHSK WERKZEUGHALTER* | AHSK100 |

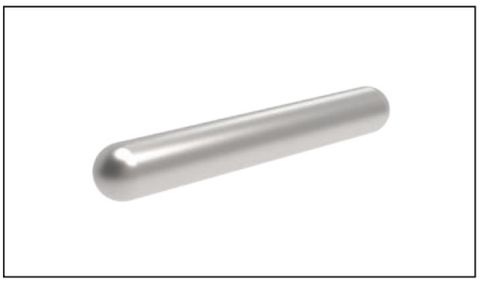

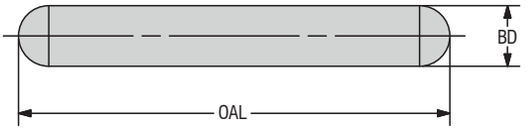


| Sipariş Kodu *Ordering Code* *Bestell-Bezeichnung* | MINI CUT MERKEZLEME PİMİ / *MINI CUT CENTERING PIN* / *MINI CUT-ZENTRIERSTIFT* | | | |
|---|---|---|---|---|
| | OAL | BD | Ürün Detayı / *Product Detail* / *Produkt-Details* | |
| **APM-28** | 17.80 | 2.5 | MINI CUT TUTUCULARI İÇİN / *FOR MINI CUT TOOL HOLDERS* / *FÜR MINI CUT WERKZEUGHALTER* | APCH20-APCH22 |

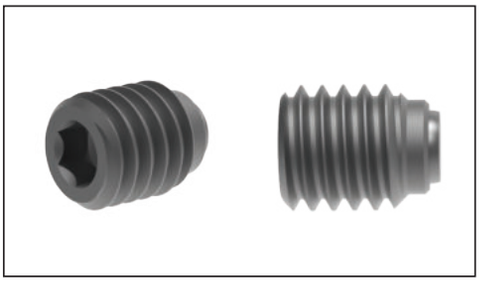

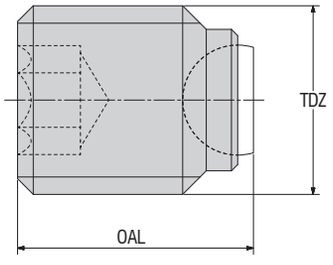


| Sipariş Kodu *Ordering Code* *Bestell-Bezeichnung* | MINI CUT SIKMA CİVATASI / MINI CUT *SCREW* / *MINI CUT SPANNBOLZEN* | | | |
|---|---|---|---|---|
| | TDZ | OAL | Ürün Detayı / *Product Detail* / *Produkt-Details* | |
| **4225-M6X7.5** | M6 | 7.5 | MINI CUT TUTUCULARI İÇİN / *FOR MINI CUT TOOL HOLDERS* / *FÜR MINI CUT WERKZEUGHALTER* | APCH20-APCH22 |
| **4225-M5x6** | M5 | 6 | MINI CUT TUTUCULARI İÇİN / *FOR MINI CUT TOOL HOLDERS* / *FÜR MINI CUT WERKZEUGHALTER* | APCH16 |

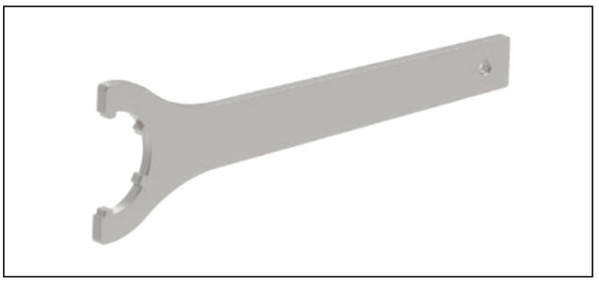

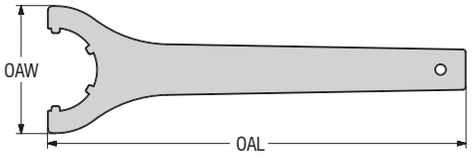


| Sipariş Kodu *Ordering Code* *Bestell-Bezeichnung* | ER TİPİ ANAHTAR / *WRENCH ER* / *SPANNSCHLÜSSEL ER* | | | |
|---|---|---|---|---|
| | OAW | OAL | Ürün Detayı / *Product Detail* / *Produkt-Details* | |
| **AWER-16** | 42.80 | 143.00 | PENS TUTUCULARI İÇİN / *FOR COLLET CHUCK HOLDERS* / *FÜR SPANNZANGEAUFNAHME* | ER16 |
| **AWER-20** | 53.50 | 172.00 | PENS TUTUCULARI İÇİN / *FOR COLLET CHUCK HOLDERS* / *FÜR SPANNZANGEAUFNAHME* | ER20 |
| **AWER-25** | 70.00 | 207.00 | PENS TUTUCULARI İÇİN / *FOR COLLET CHUCK HOLDERS* / *FÜR SPANNZANGEAUFNAHME* | ER25 |
| **AWER-32** | 78.00 | 255.00 | PENS TUTUCULARI İÇİN / *FOR COLLET CHUCK HOLDERS* / *FÜR SPANNZANGEAUFNAHME* | ER32 |
| **AWER-40** | 95.00 | 285.00 | PENS TUTUCULARI İÇİN / *FOR COLLET CHUCK HOLDERS* / *FÜR SPANNZANGEAUFNAHME* | ER40 |

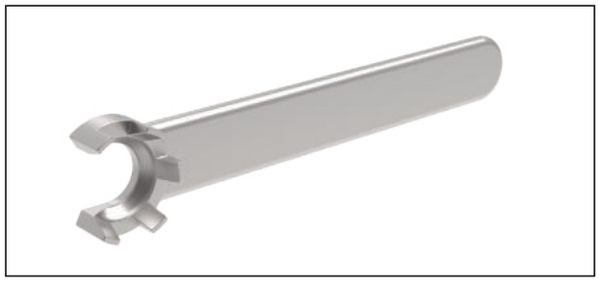

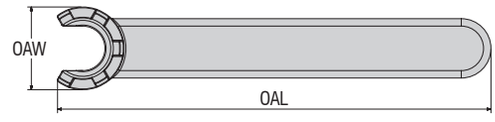


| Sipariş Kodu *Ordering Code* *Bestell-Bezeichnung* | ER TİPİ ANAHTAR MİNİ / *WRENCH ER MINI* / *SPANNSCHLÜSSEL ER MINI* | | | |
|---|---|---|---|---|
| | OAW | OAL | Ürün Detayı / *Product Detail* / *Produkt-Details* | |
| **AWER-11-M** | 16.80 | 95.00 | PENS TUTUCULARI İÇİN / *FOR COLLET CHUCK HOLDERS* / *FÜR SPANNZANGEAUFNAHME* | ER11-M |
| **AWER-16-M** | 22.50 | 117.00 | PENS TUTUCULARI İÇİN / *FOR COLLET CHUCK HOLDERS* / *FÜR SPANNZANGEAUFNAHME* | ER16-M |
| **AWER-20-M** | 28.00 | 128.00 | PENS TUTUCULARI İÇİN / *FOR COLLET CHUCK HOLDERS* / *FÜR SPANNZANGEAUFNAHME* | ER20-M |
| **AWER-25-M** | 36.00 | 140.00 | PENS TUTUCULARI İÇİN / *FOR COLLET CHUCK HOLDERS* / *FÜR SPANNZANGEAUFNAHME* | ER25-M |

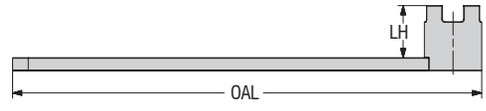


| Sipariş Kodu *Ordering Code* *Bestell-Bezeichnung* | TARAMA BAŞLIK CİVATASI SIKMA ANAHTARI DIN 6368 / *WRENCH FOR SHELL ARBOR DIN 6368* / *SPANNSCHLÜSSEL DIN 6368 FÜR AUFSTECKDORNE* | | | | | |
|---|---|---|---|---|---|---|
| | DRVS | FTDZ | OAL | LH | Ürün Detayı / *Product Detail* / *Produkt-Details* | |
| **AWFM-16** | 16.0 | M8 | 180.00 | 20.0 | YÜZEY FREZE TAKIM TUTUCULARI İÇİN / FOR FACE MILLING TOOL HOLDERS / *FÜR PLANFRÄSE HALTER* | FM-16 |
| **AWFM-22** | 22.0 | M10 | 200.00 | 25.0 | YÜZEY FREZE TAKIM TUTUCULARI İÇİN / FOR FACE MILLING TOOL HOLDERS / *FÜR PLANFRÄSE HALTER* | FM-22 |
| **AWFM-27** | 27.0 | M12 | 225.00 | 32.0 | YÜZEY FREZE TAKIM TUTUCULARI İÇİN / FOR FACE MILLING TOOL HOLDERS / *FÜR PLANFRÄSE HALTER* | FM-27 |
| **AWFM-32** | 32.0 | M16 | 250.00 | 36.0 | YÜZEY FREZE TAKIM TUTUCULARI İÇİN / FOR FACE MILLING TOOL HOLDERS / *FÜR PLANFRÄSE HALTER* | FM-32 |
| **AWFM-40** | 40.0 | M20 | 280.00 | 40.0 | YÜZEY FREZE TAKIM TUTUCULARI İÇİN / FOR FACE MILLING TOOL HOLDERS / *FÜR PLANFRÄSE HALTER* | FM-40 |
| **AWFM-50** | 50.0 | M24 | 315.00 | 50.0 | YÜZEY FREZE TAKIM TUTUCULARI İÇİN / FOR FACE MILLING TOOL HOLDERS / *FÜR PLANFRÄSE HALTER* | FM-50 |

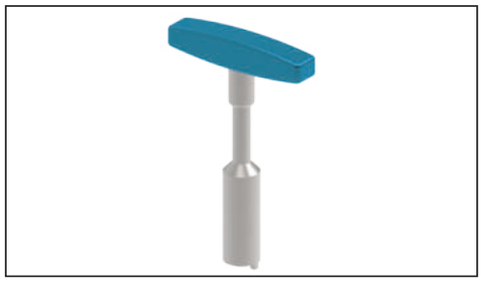

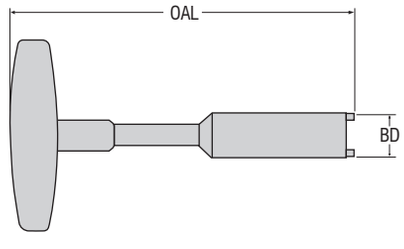


| Sipariş Kodu *Ordering Code* *Bestell-Bezeichnung* | SOĞUTMA SUYU ÜNİTESİ ANAHTARI / *WRENCH FOR DELIVERY UNIT FOR COOLANT* / *SCHLÜSSEL FÜR KÜHLMITTELÜBERGABEEINHEIT* | | | |
|---|---|---|---|---|
| | OAL | BD | Ürün Detayı / *Product Detail* / *Produkt-Details* | |
| **AWHSK-32** | 115 | 8.50 | AHSK TAKIM TUTUCULARI İÇİN / *FOR AHSK TOOL HOLDERS* / *FÜR AHSK WERKZEUGHALTER* | AHSK32 |
| **AWHSK-40** | 115 | 10.50 | AHSK TAKIM TUTUCULARI İÇİN / *FOR AHSK TOOL HOLDERS* / *FÜR AHSK WERKZEUGHALTER* | AHSK40 |
| **AWHSK-50** | 115 | 14.50 | AHSK TAKIM TUTUCULARI İÇİN / *FOR AHSK TOOL HOLDERS* / *FÜR AHSK WERKZEUGHALTER* | AHSK50 |
| **AWHSK-63** | 136 | 16.50 | AHSK TAKIM TUTUCULARI İÇİN / *FOR AHSK TOOL HOLDERS* / *FÜR AHSK WERKZEUGHALTER* | AHSK63 |
| **AWHSK-80** | 136 | 18.50 | AHSK TAKIM TUTUCULARI İÇİN / *FOR AHSK TOOL HOLDERS* / *FÜR AHSK WERKZEUGHALTER* | AHSK80 |
| **AWHSK-100** | 136 | 22.00 | AHSK TAKIM TUTUCULARI İÇİN / *FOR AHSK TOOL HOLDERS* / *FÜR AHSK WERKZEUGHALTER* | AHSK100 |

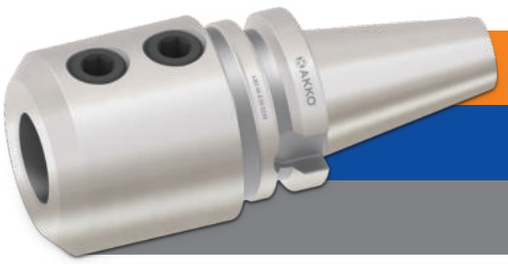

Veldon takım tutucular DIN 1835-B normuna uygun silindirik şaftlı kesici takımları sıkmak için kullanılır. Lütfen sıkma tork değerlerine uyunuz.

End mill holders are used to clamp cylindrical shank cutting tools in accordance with DIN 1835-B standard. Please pay attention to the torque values.

Veldon Werkzeughalter werden zum Spannen von Zylinderschaft-Zerspanungswerkzeugen nach DIN 1835-B verwendet. Bitte beachten Sie die Anzugsdrehmomente.

| SIKMA ÇAPI<br>*CLAMPING DIAMETER*<br>*SPANNDURCHMER* | VELDON SIKMA CİVATASI<br>CLAMPING SCREW WELDON<br>WELDON-KLEMMSCHRAUBE | SW (mm) | SIKMA TORKU (Nm)<br>CLAMPING TORQUE (Nm)<br>ANZUGSKRAFT (Nm) |
|---|---|---|---|
| Ø 6 mm | M6 | 3 | 10 Nm |
| Ø 8 mm | M8 | 4 | 10 Nm |
| Ø 10 mm | M10 | 5 | 16 Nm |
| Ø 12 mm | M12 | 6 | 28 Nm |
| Ø 14 mm | M12 | 6 | 28 Nm |
| Ø 16 mm | M14 | 6 | 42 Nm |
| Ø 18 mm | M14 | 6 | 42 Nm |
| Ø 20 mm | M16 | 8 | 50 Nm |
| Ø 25 mm | M18x2 | 10 | 60 Nm |
| Ø 32 mm | M20x2 | 10 | 72 Nm |
| Ø 40 mm | M20x2 | 10 | 72 Nm |
| Ø 50 mm | M24x2 | 12 | 90 Nm |
| Ø 63 mm | M24x2 | 12 | 90 Nm |

## PENS TUTUCULAR TEKNİK BİLGİ
## *COLLET CHUCK TECHNICAL DATA*
## *SPANNZANGEN TECHNISCHE DATEN*

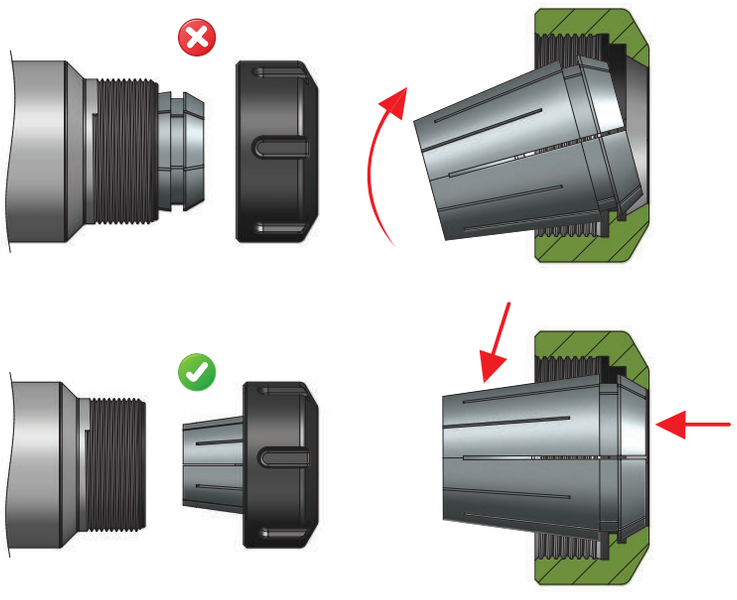

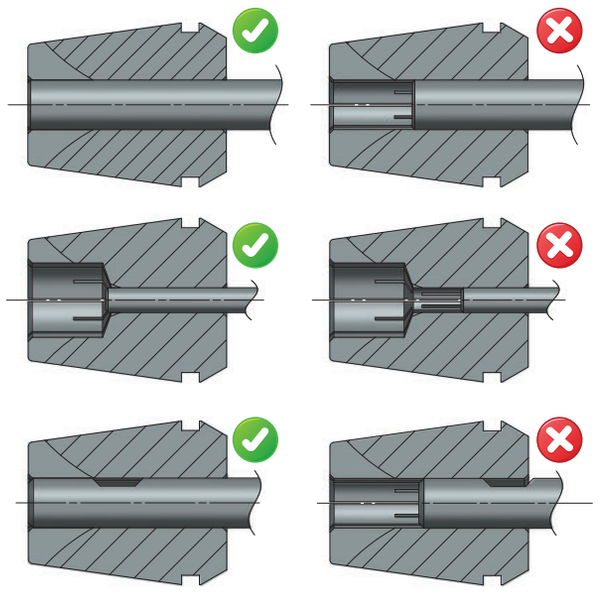

| PENS ÖLÇÜSÜ<br>*COLLET CHUCKS DIMENSION*<br>*ABMESSUNGEN DER SPANNFUTTER* | PENS KAPAĞI<br>*CLAMPING NUTS*<br>*SPANNMUTTER* | SIKMA TORKU<br>*CLAMPING TORQUE*<br>*ANZUGSKRAFT* |
|---|---|---|
| ER 16 M | M19 x 1 | 28 Nm |
| ER 16 | M22 x 1.5 | 50 Nm |
| ER 20 | M25 x 1.5 | 75 Nm |
| ER 25 | M32 x 1.5 | 85 Nm |
| ER 32 | M40 x 1.5 | 105 Nm |
| ER 40 | M50 x 1.5 | 150 Nm |

Maksimum performans için, sıkma somunu dişi ve pens konik kullanılmadan önce temizlenmeli ve yağlanmalıdır. En iyi sonuç için, kesici takımı pensin sıkma boyunun tamamına yerleştiriniz.

Locking nut thread and collet taper for maximum performance must be cleaned and lubricated before use. For best performance, put the cutting tool over the entire clamping length of the collet.

Sicherungsmuttergewinde und Spannzangenkonus für maximale Leistung müssen vor Gebrauch gereinigt und geschmiert werden. Für beste Ergebnisse, setzen Sie das Schneidwerkzeug über die gesamte Spannlänge der Spannzange ein.

AKKO®
the spoken quality... konuşulan kalite... qualität über die man spricht...
akko.com.tr
THE SPOKEN QUALITY
AKKO
AC6-EM-32-090
AKKO
ABT40-EM-32-100
www.akko.com.tr

# konuşulan
# the spoken kalite...
# quality...

Değiştirilebilir Uçlu Takımlar,
Takım Tutucu Sistemler ve Kesici Uçlar
Indexable Tools, Tool Holder Systems and Cutting Inserts
Zerspanungswerkzeuge, Werkzeugaufnahmen
und Zerspanungswerkzeuge

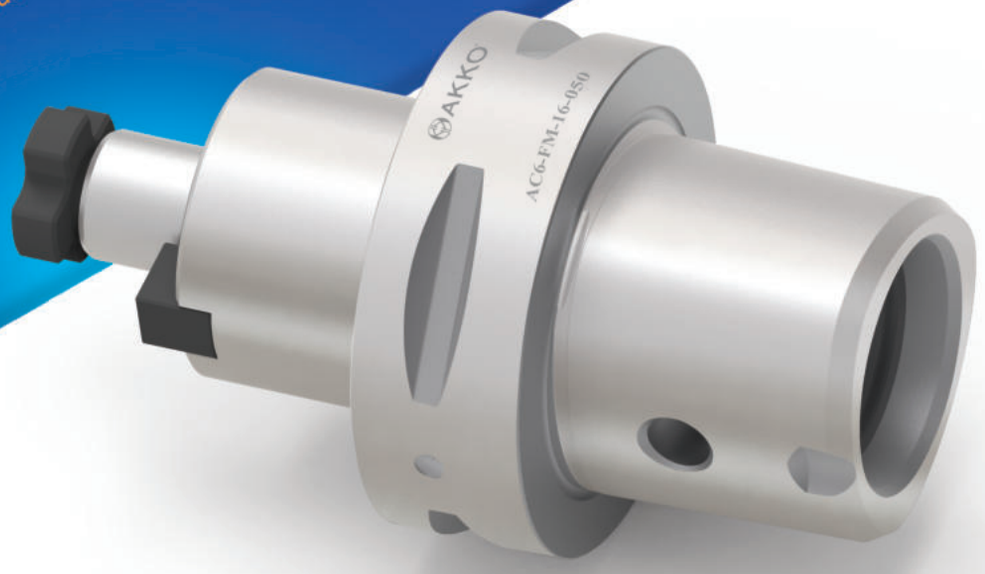


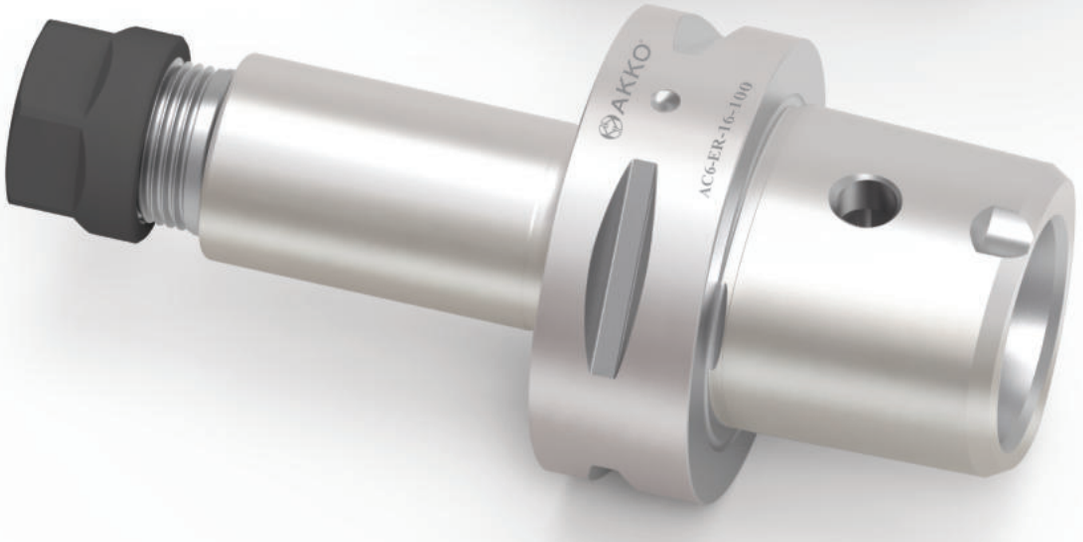


YERLİ ÜRETİM

K-Q TSE-ISO-EN 9000
TS EN ISO 9001:2015

CERTIFIED IQNet QUALITY SYSTEM

AKKO Metalworking Tools

# THE SPOKEN QUALITY

www.akko.com.tr

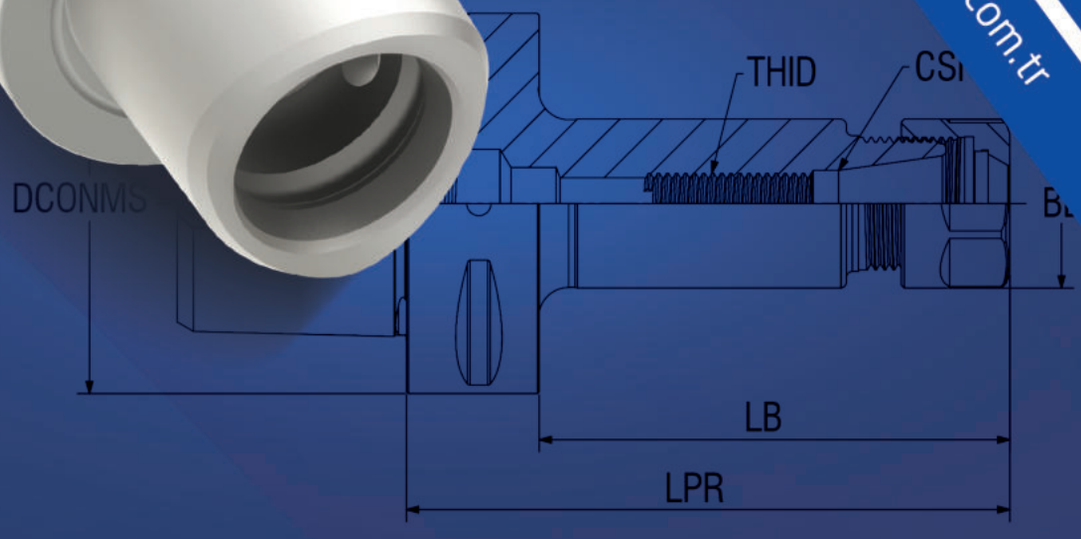


0100/0825

AKKO®
MAKİNA SANAYİ VE TİCARET A.Ş.

Konya 5. Organize Sanayi Bölgesi
Aşağıpınarbaşı Osb Mh. 526 Nolu Sk. No:1
Selçuklu / KONYA / TÜRKİYE

Tel : +90 332 239 17 57 (pbx)
Fax : +90 332 239 17 52
GPS : 38.005409, 32.635734

www.akko.com.tr
akko@akko.com.tr
export@akko.com.tr

AKKO Metalworking Tools
Yeniliklerı için bizi takip edin!
Follow us for news!
Für Neuheiten bitte uns folgen