Leistritz

INTERNAL WHIRLING LWN 120 IW

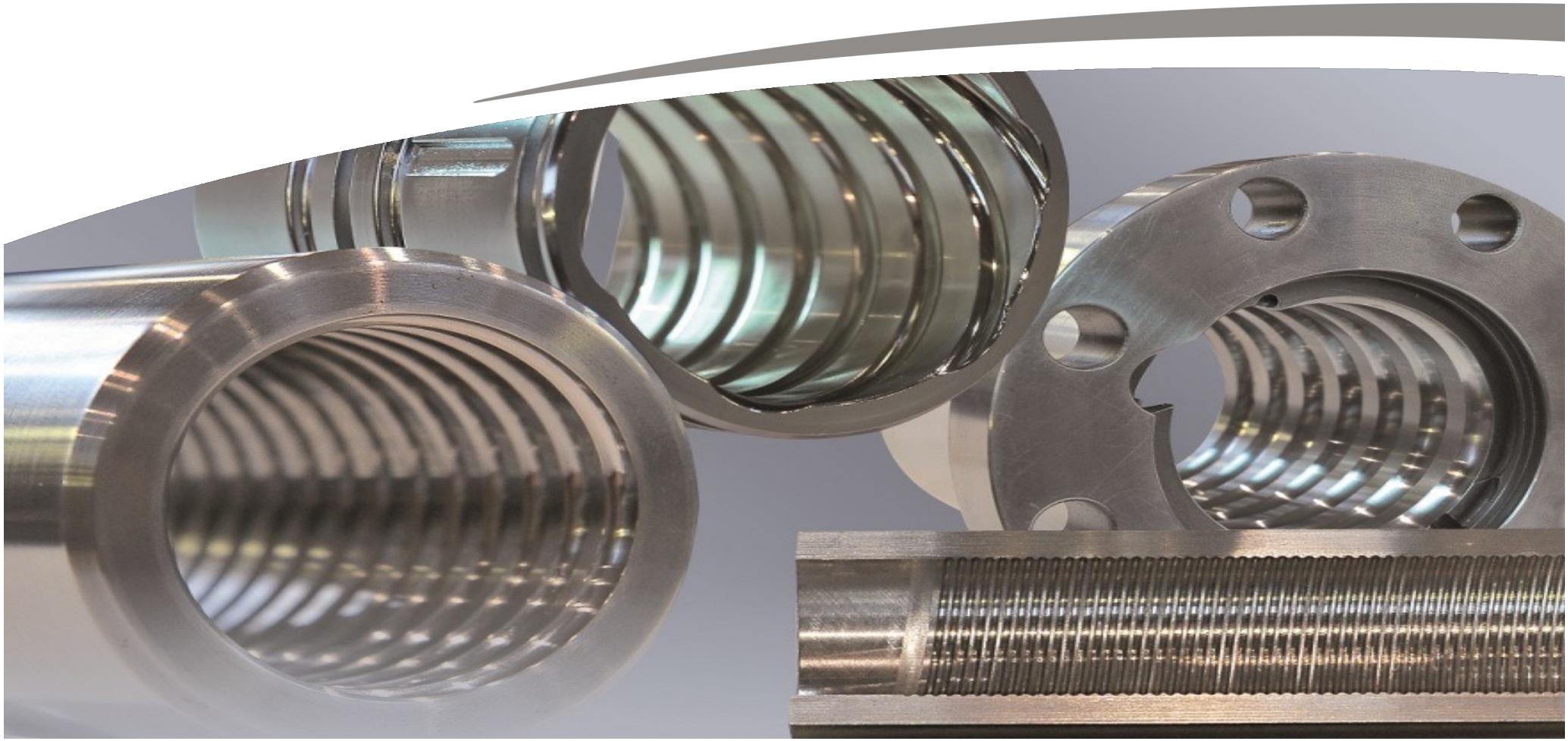

APLICATIONS ***INTERNAL WHIRLING***

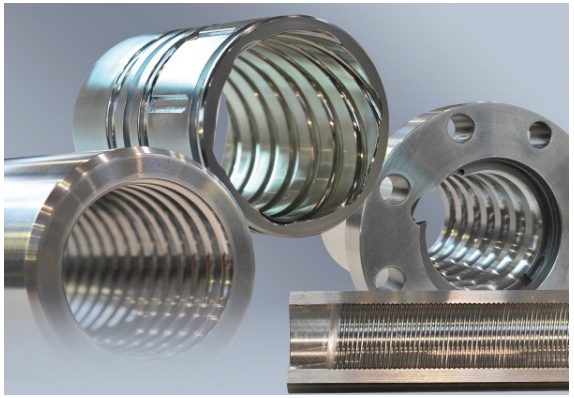

Screw nuts

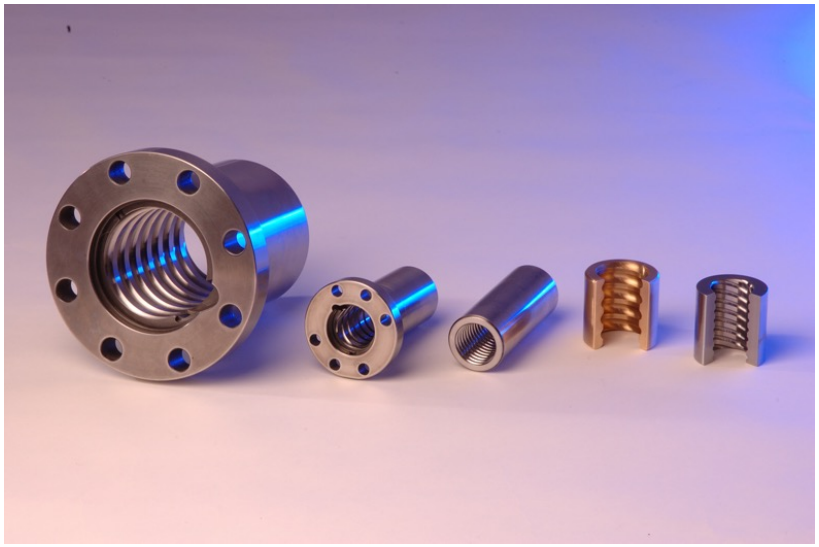

Screw nuts

Leistritz
LWN 120 IW

TECHNICAL DATA

max. working length:	800 mm
Internal Diameter range approx.:	15 - 140 mm
Max. Clamping Dia:	160 mm

Lead of 64 mm with an internal dia. of 32 mm

Max. lead of 32 degree possible

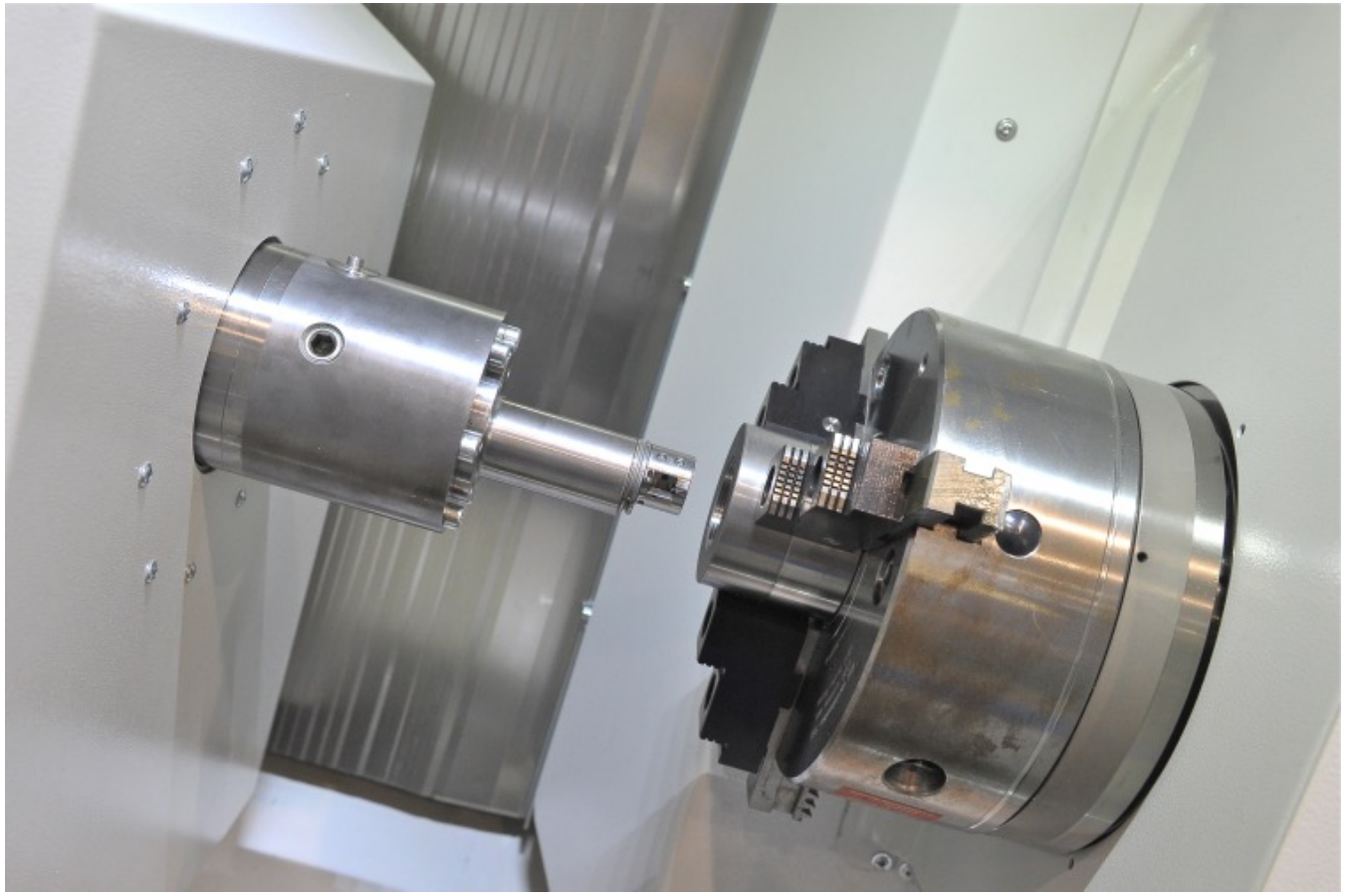

TOOLING *SYSTEM*

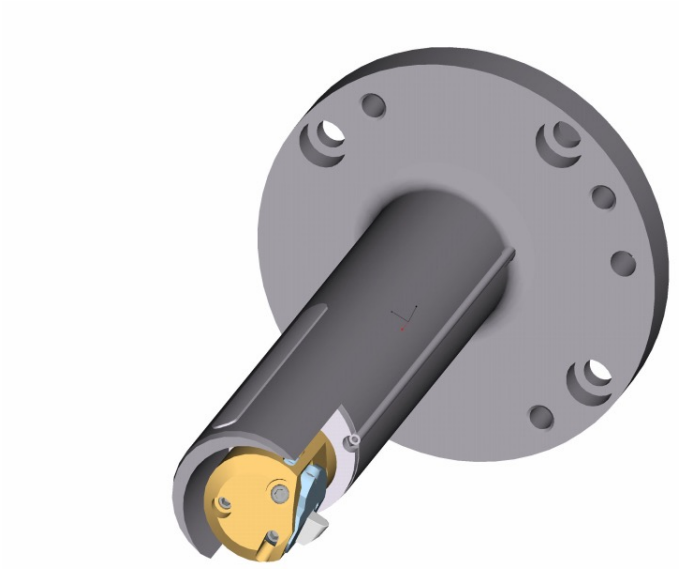

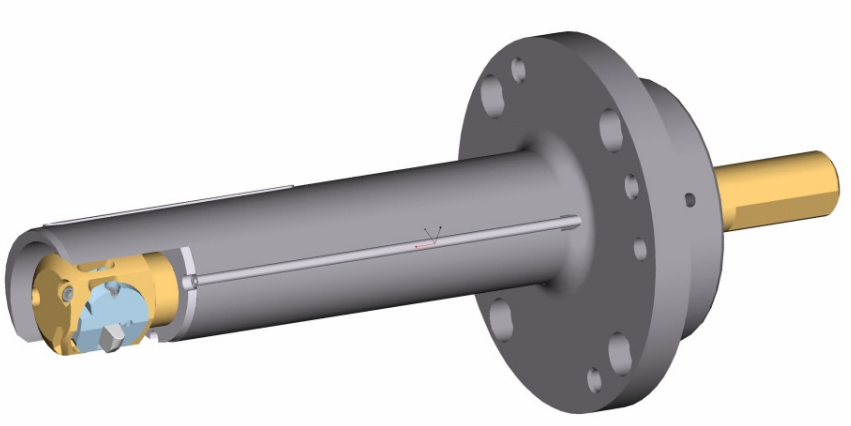

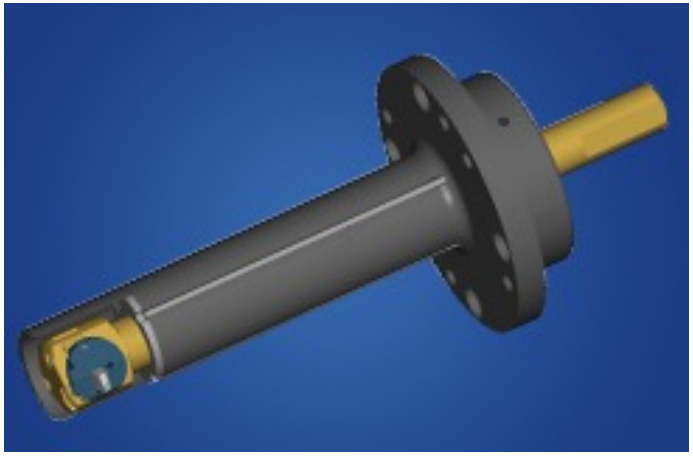

- Guide hand
- Whirling spindle
- Clamping plate
- Whirling tip

EXAMPLE WORKPIECE

Workpiece 550.052	
Roughing	5,26 min
Finishing	6,58 min

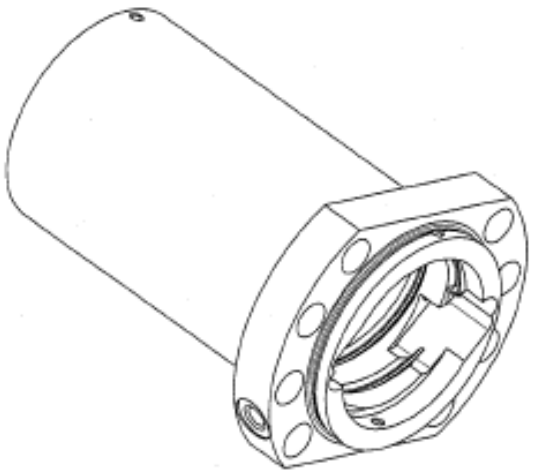

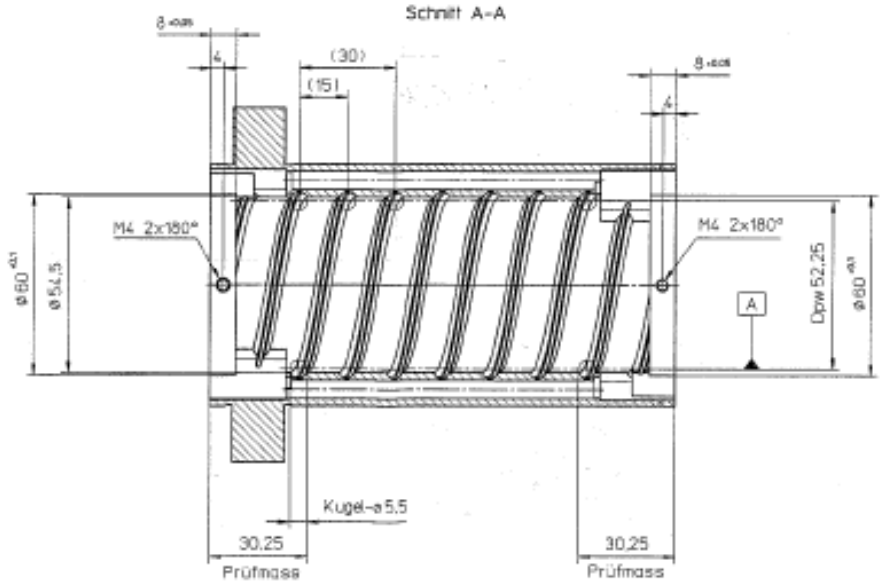

Workpiece data	
Number of starts	2
Lead (right hand)	30 mm
Swivelling angle	10.3572°
Lead variation max.	0.023 mm/300mm

BALL SCREW NUT

EXAMPLE

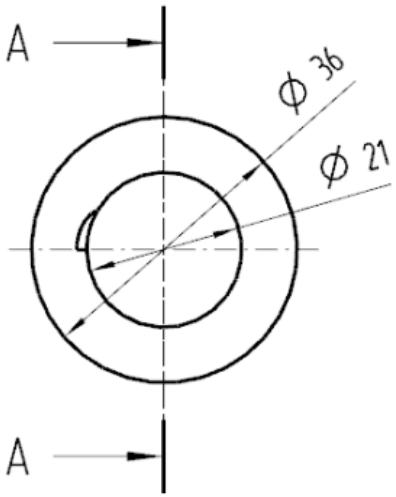

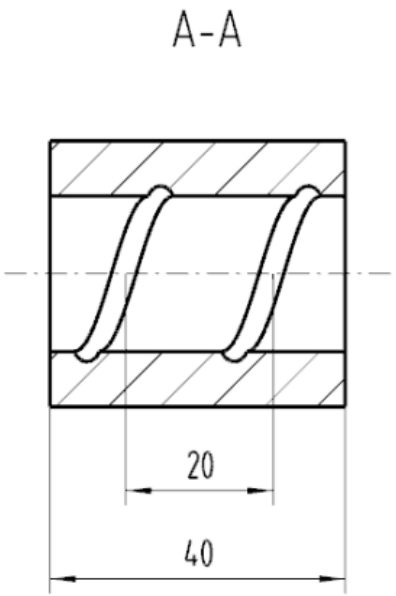

Ball-Diameter: 3,175mm

Hardness: 60HRC

Cycle time: 76sec / start

Workpiece Data	
Number of starts	6
Ball size	6,350
Lead (left hand)	86

BALL SCREW NUT

EXAMPLE FOR SURFACE FINISH QUALITY

Mahr — MarWin 7.00-18 SP 4	Leistritz Produktionstechnik GmbH Leistritzstr. 1-11 92714 Pleystein	28.01.2016 1 10:48:32 Prüfer: Rewitzer H.-J. Unterschrift:
Teil: Innenwirbelteil	Zeichnungs-Nr.:	Bearbeitungsschritt: Rauheitsmessung
Quer zur Wirbelrichtung		
Kommentar:		

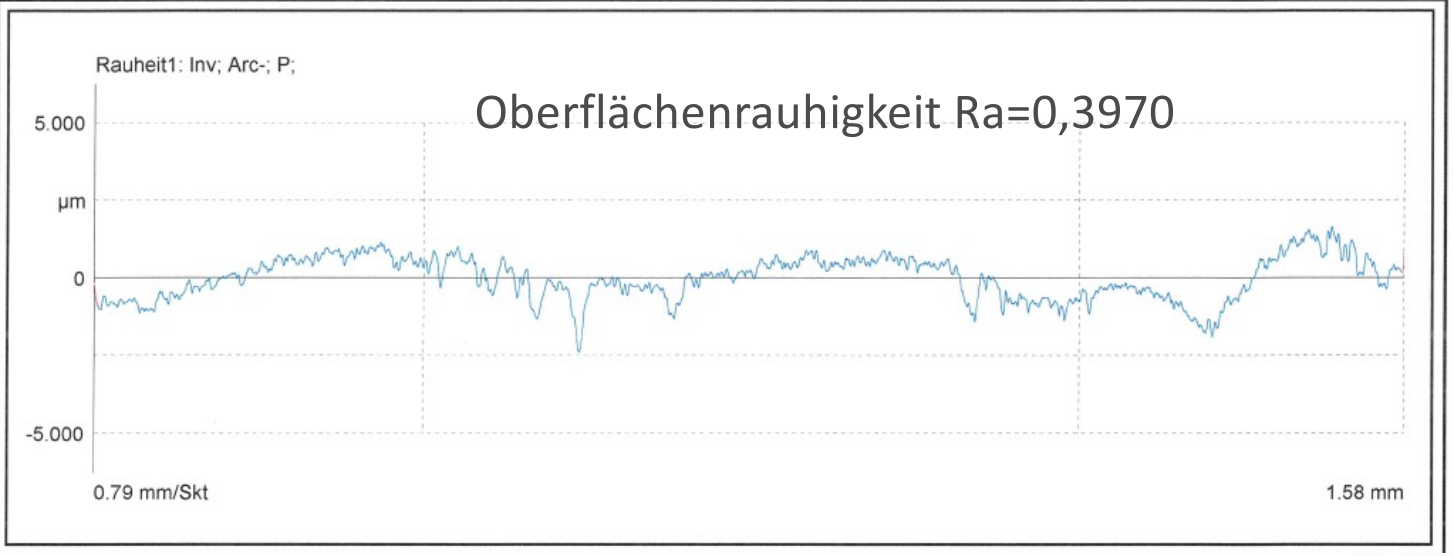

BALL SCREW NUT

EXAMPLE

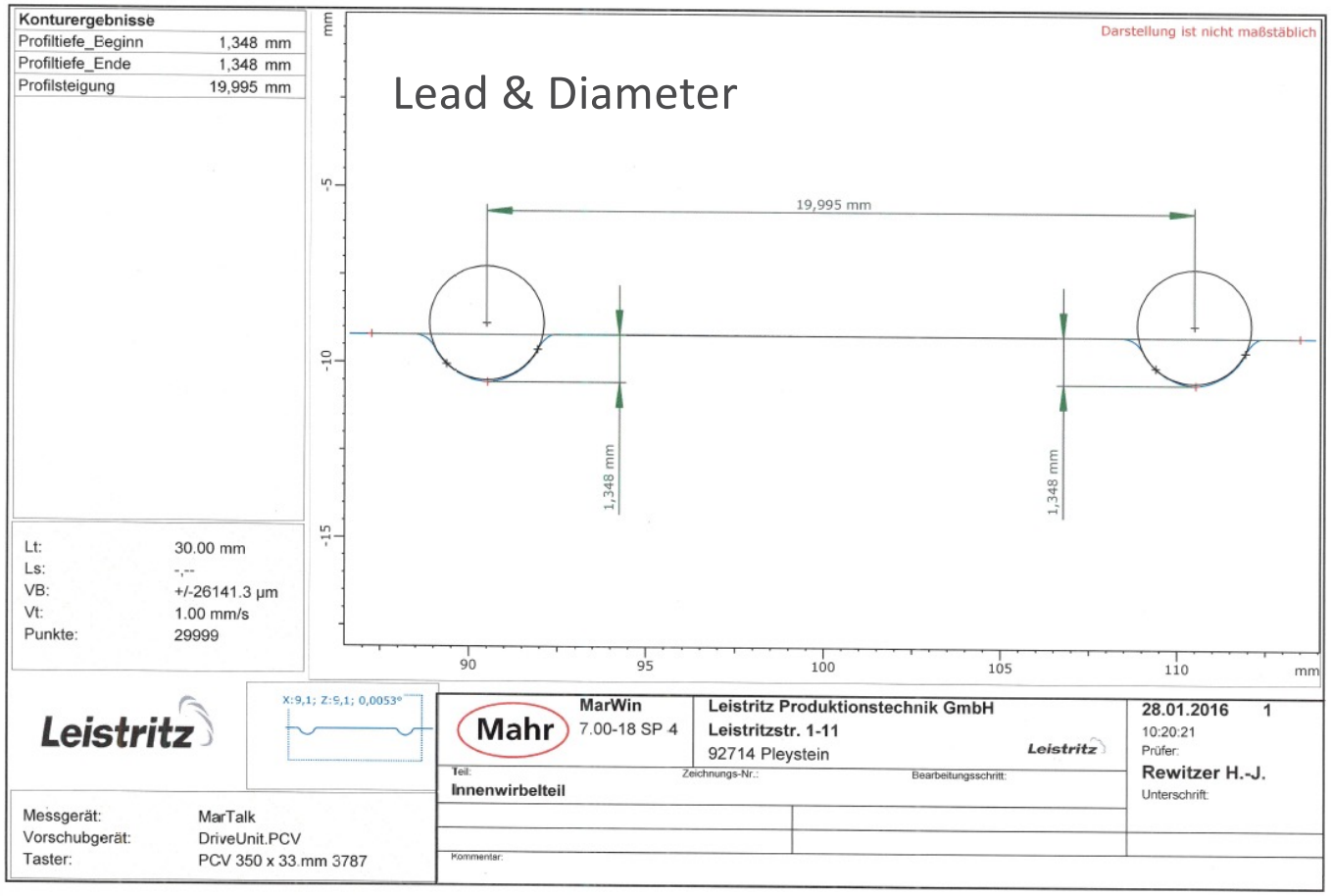

EXAMPLE WORKPIECE

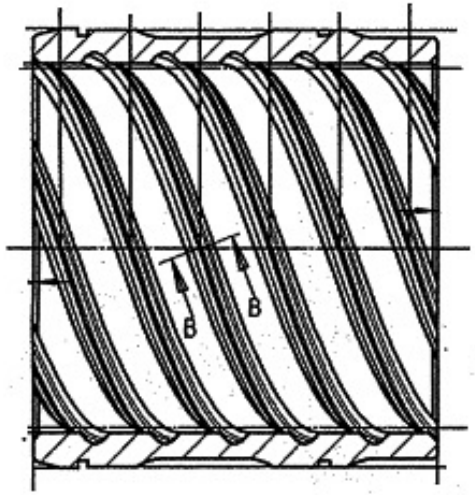

Workpiece data	
Number of starts	6
Lead (left hand)	86
Ball diameter	6,350
Cutting time	432 Sek.

WHILRING TOOL - NON GUIDED (STANDARD RATIO OF LENGTH/DIAMETER)

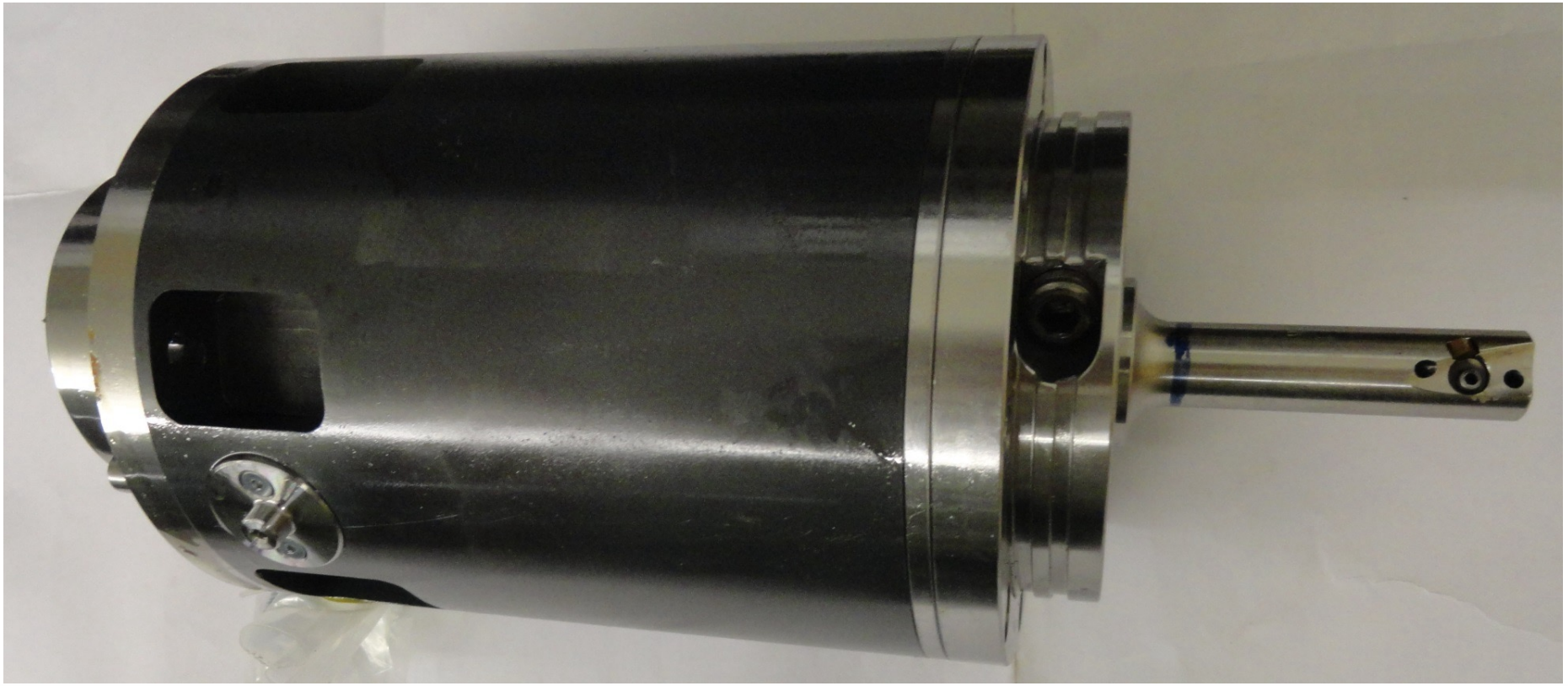

WHIRLING TOOL – WHIRLING HEAD

WHIRLING TOOL - INSERT

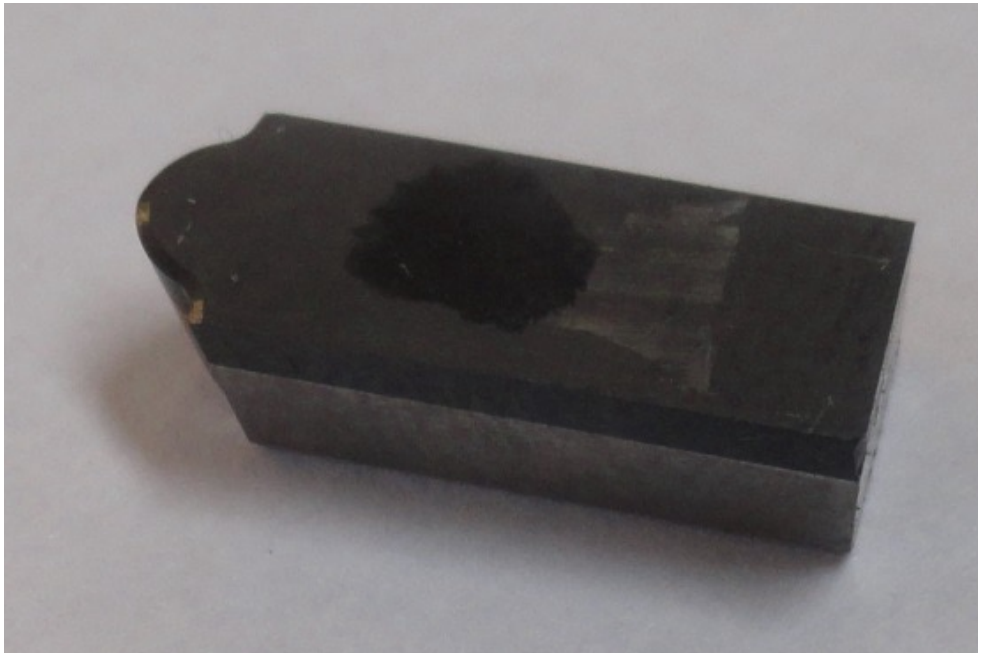

WHIRLING TOOL – NON GUIDED

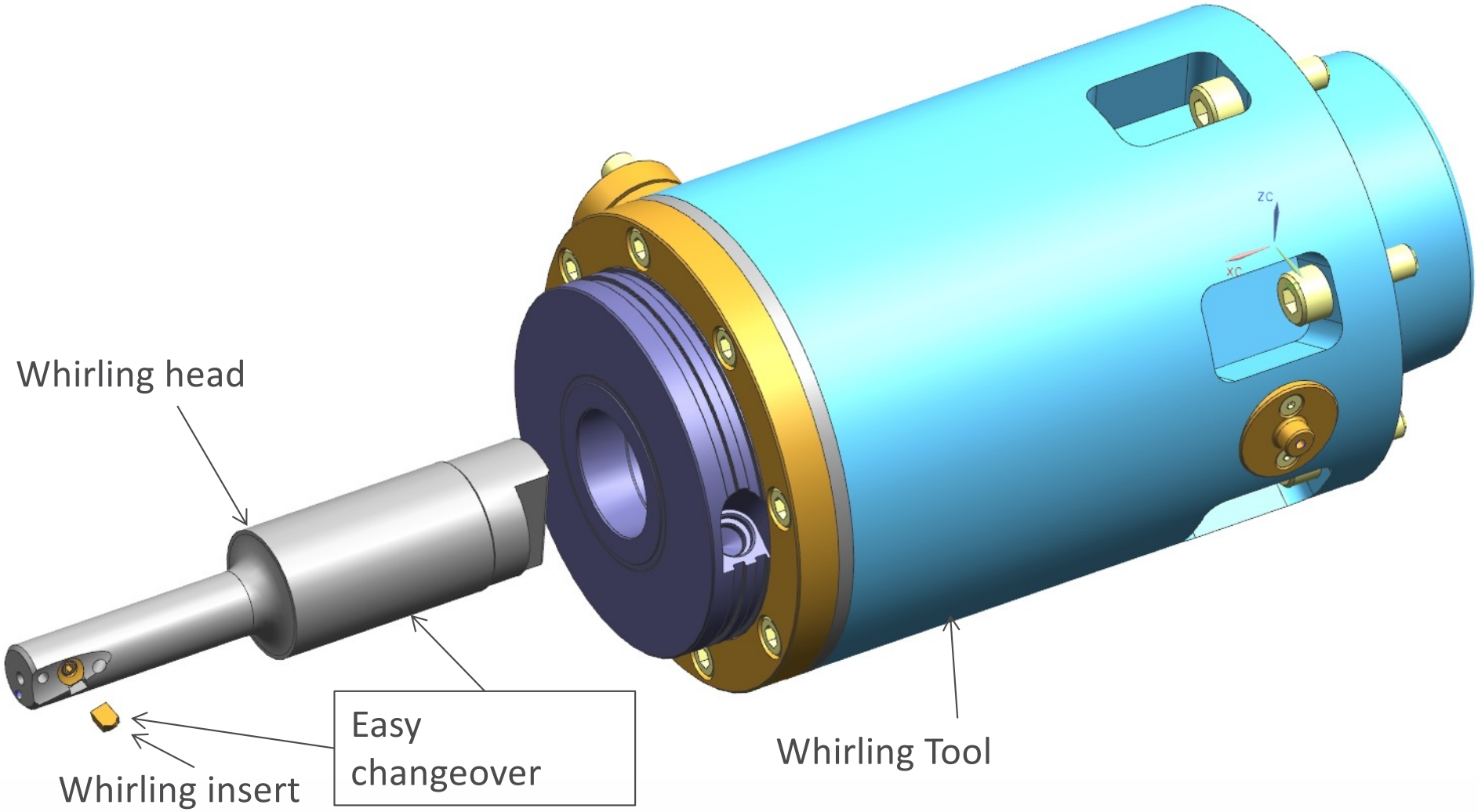

WHIRLING TOOL – GUIDED

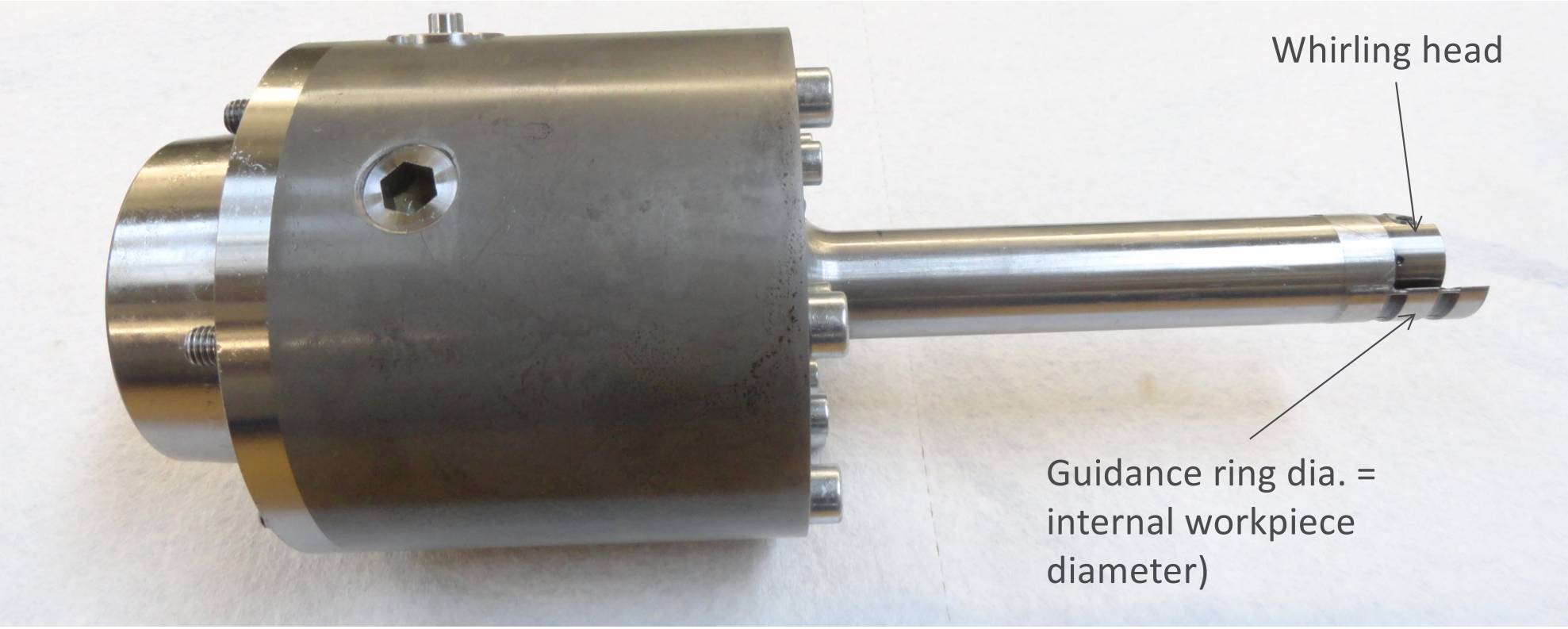

WHIRLING TOOL – WHILRING HEAD

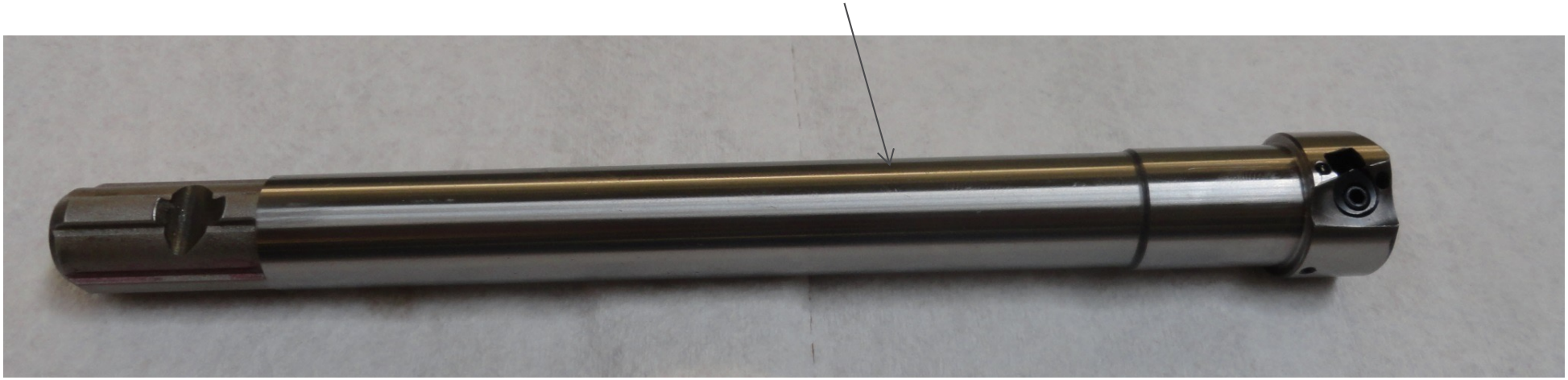

WHIRLING TOOL - GUIDED

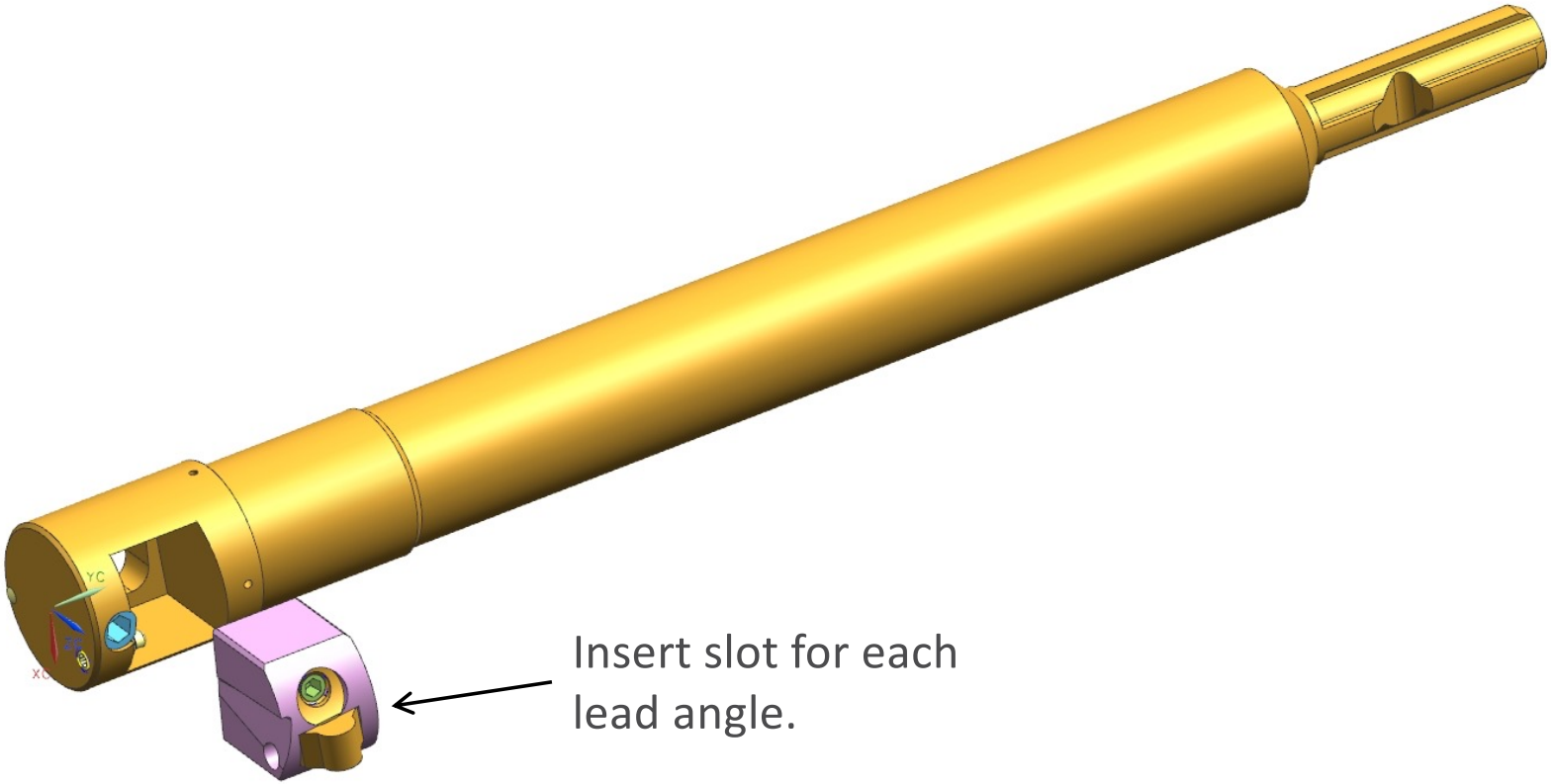

WHILRING TOOL - GUIDED

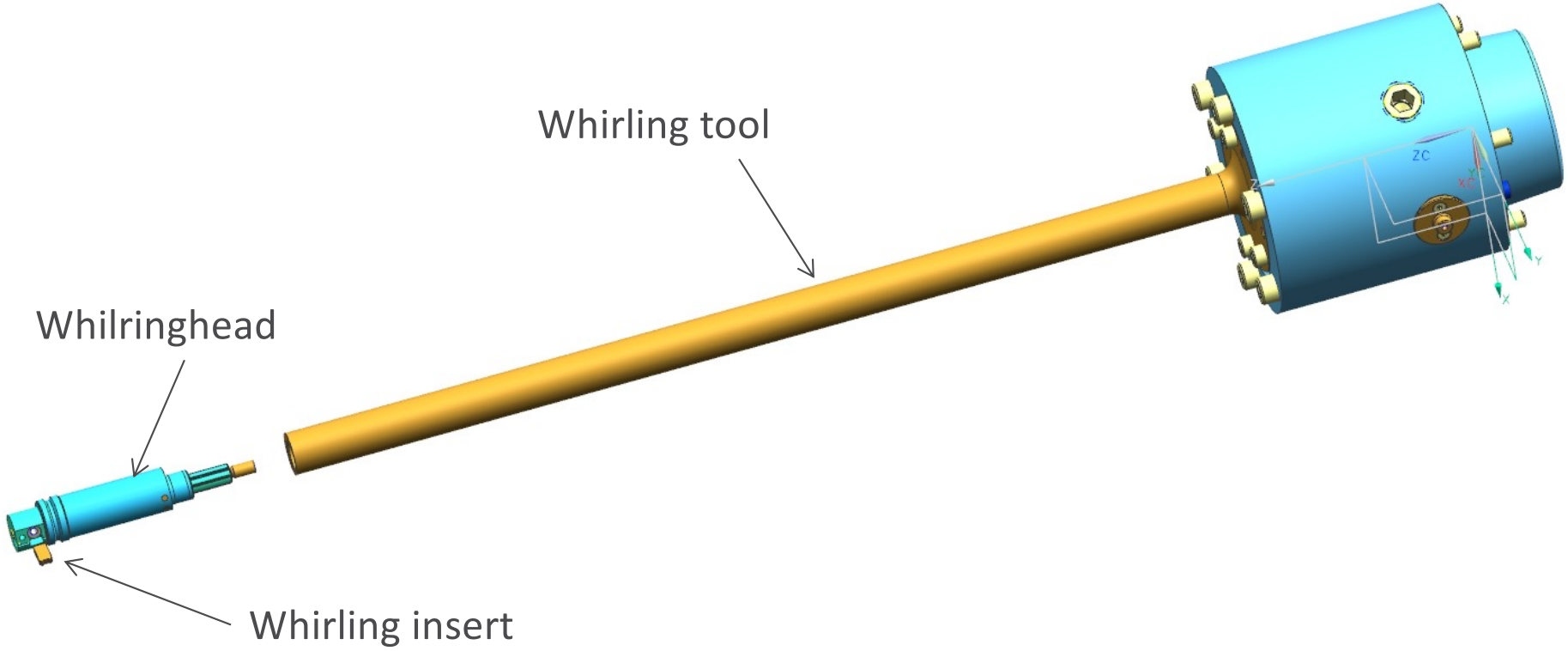

Thank you very much for your attention