LWN 90 S

Leistritz whirling machine

Leistritz
PRODUCTION TECHNOLOGY

The Leistritz Whirling Machine LWN 90 S is equipped with the AWS 90-S external whirling unit for the machining of ball screws/planetary roller screws with:

Approx. 3 - 28 mm external diam.
up to 300 mm screw length

This machine type is the result of long lasting experience in the field of thread whirling. It has been designed based on the latest technical findings. Furthermore, it has been payed highest attention on production-orientated and ergonomic characteristics, resulting in higher productivity and precision.

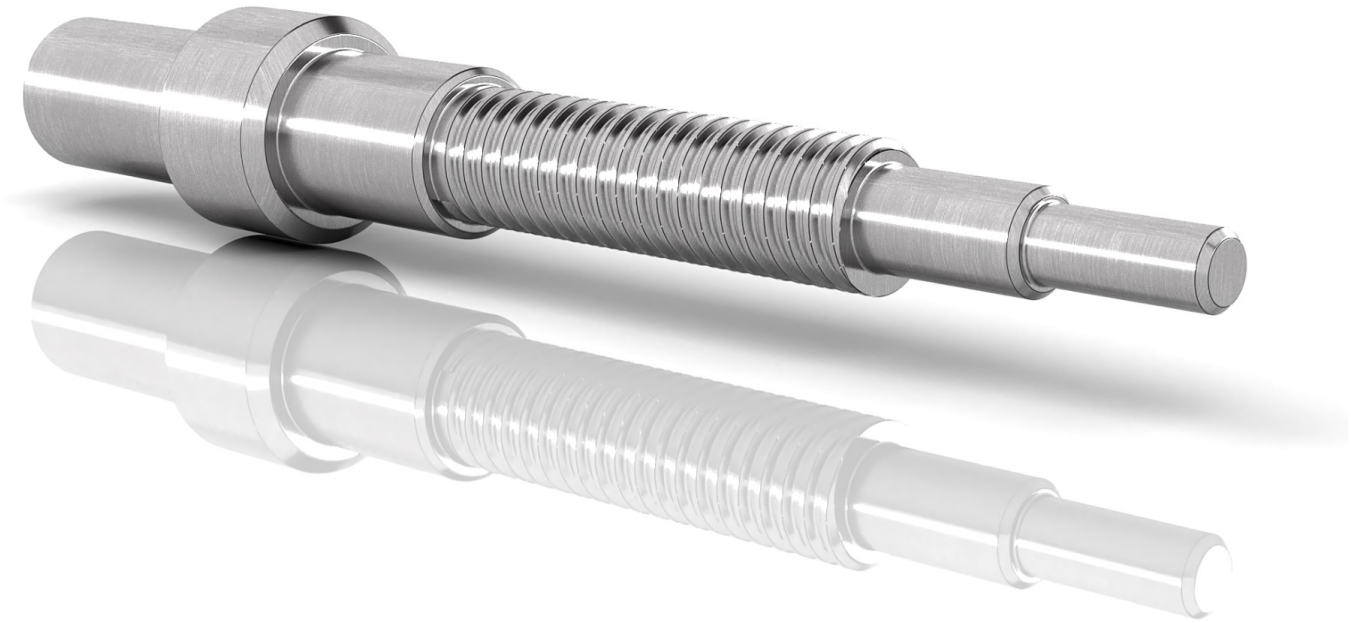

The Leistritz Whirling Machine LWN 90 S is equipped with the AWS 90-S external whirling unit for the machining of ball screws/planetary roller screws with:

Approx. 3 - 28 mm external diam.
up to 300 mm screw length

This machine type is the result of long lasting experience in the field of thread whirling. It has been designed based on the latest technical findings. Furthermore, it has been payed highest attention on production-orientated and ergonomic characteristics, resulting in higher productivity and precision.

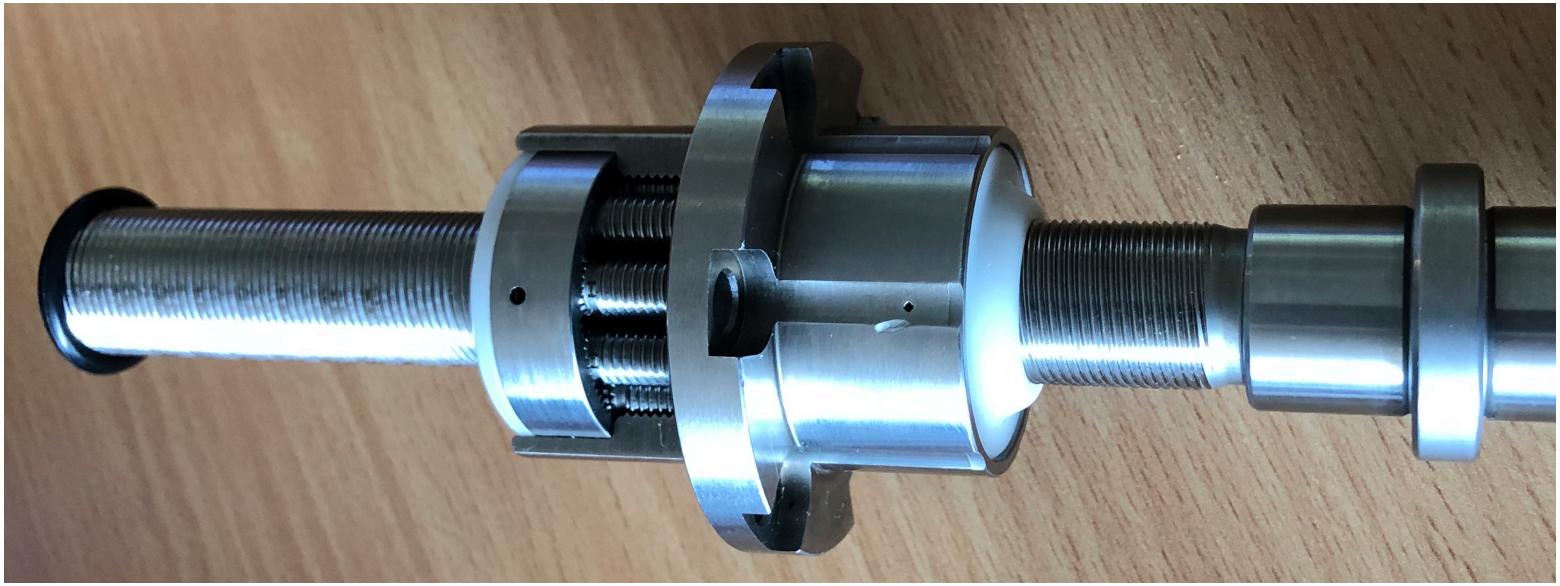

The Leistritz Whirling Machine LWN 90 S is equipped with the AWS 90-S external whirling unit for the machining of ball screws/planetary roller screws with:

Approx. 3 - 28 mm external diam.
up to 300 mm screw length

This machine type is the result of long lasting experience in the field of thread whirling. It has been designed based on the latest technical findings. Furthermore, it has been payed highest attention on production-orientated and ergonomic characteristics, resulting in higher productivity and precision.

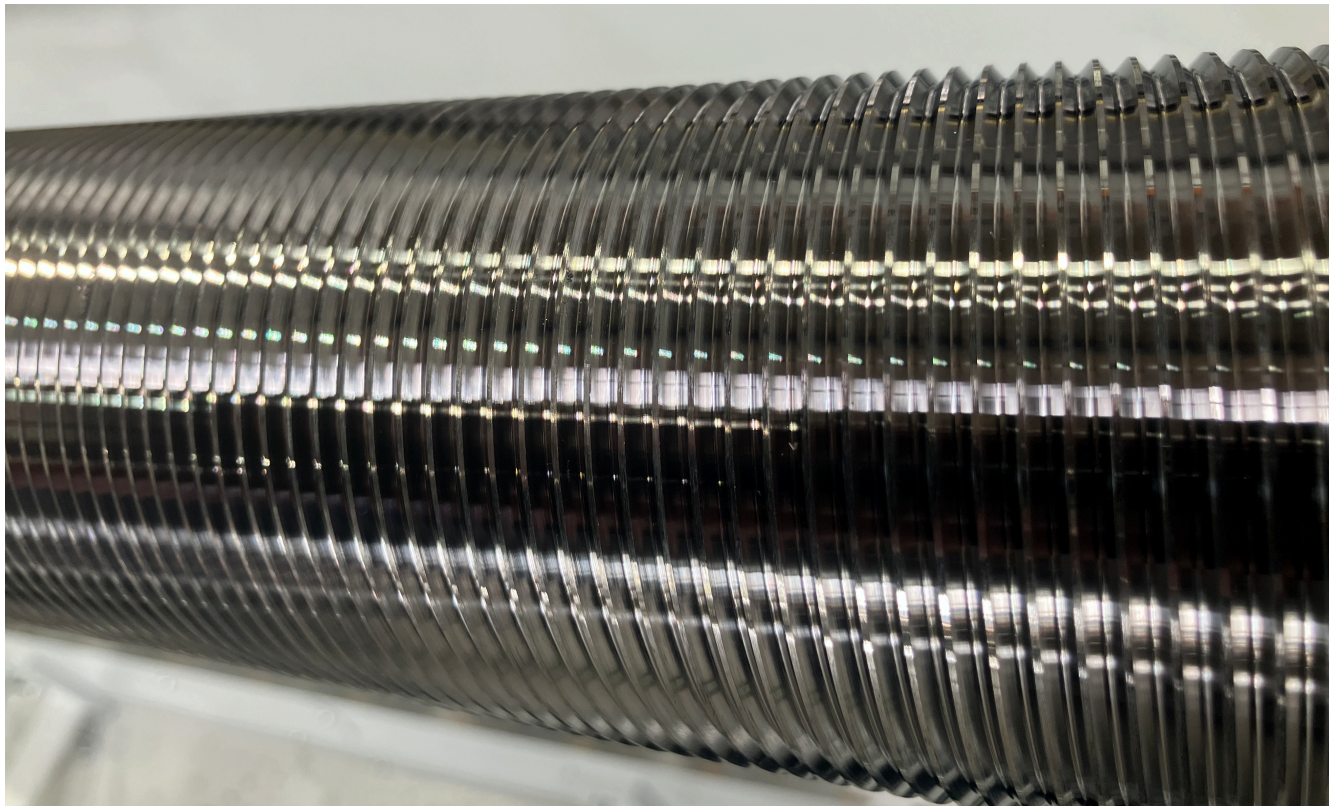

The Leistritz Whirling Machine LWN 90 S is equipped with the AWS 90-S external whirling unit for the machining of ball screws/planetary roller screws with:

Approx. 3 - 28 mm external diam.
up to 300 mm screw length

This machine type is the result of long lasting experience in the field of thread whirling. It has been designed based on the latest technical findings. Furthermore, it has been payed highest attention on production-orientated and ergonomic characteristics, resulting in higher productivity and precision.

Diameter	BCD	V 2∏	V 300	Pitch
8 mm	0,005 µm	4 µm	5 µm	0,002 µm

The LWN 90 S is equipped with the AWS 90-S whirling unit specially designed for the machine. The housing of the AWS 90 is made of rigid, vibration-damping cast iron.

In addition, it is equipped with support bolts on both sides for stable guidance and is connected to the cross slide of the machine.

The whirling unit is driven by a Torque motor, that allows 8,000 rpm to ensure the right cutting speed over the complete diameter range.

Air nozzles on the whirling unit support chip removal from the processing zone and cool the workpiece.

The machine is equipped with a hydraulic collet chuck.

The large contact area between chuck and workpiece allows high torque to be transmitted and provides high concentricity.

Short set up time less than 1 minute for the collet change.

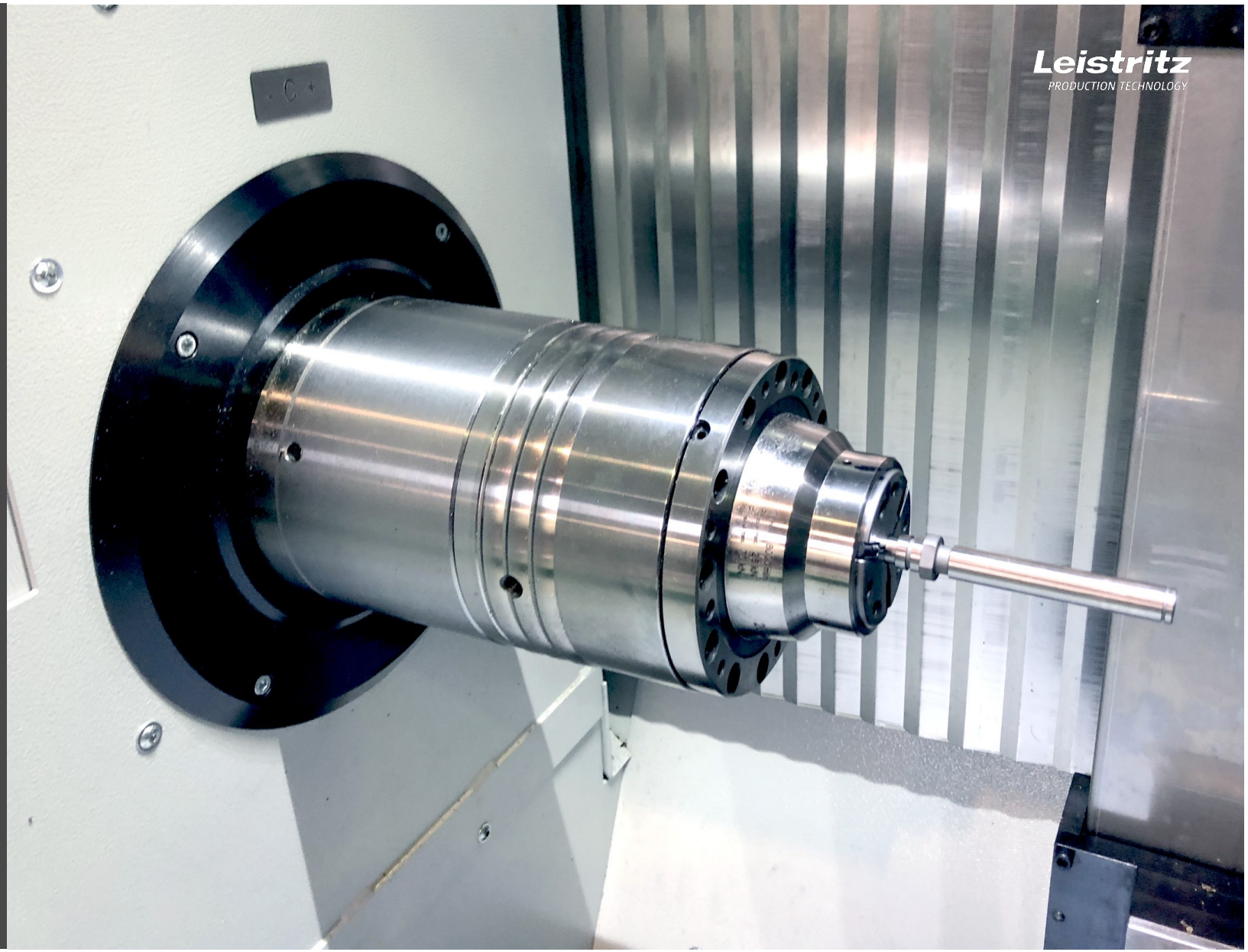

Moving and pressing of the tailstock centre is effected by a servo motor drive and ball screw drive. As the motor includes a moment regulation the clamping force can be adapted to the workpiece.

The tailstock is designed as NC controlled slide where application specific attachments can be installed: fixed center or counter spindle with collet chuck.

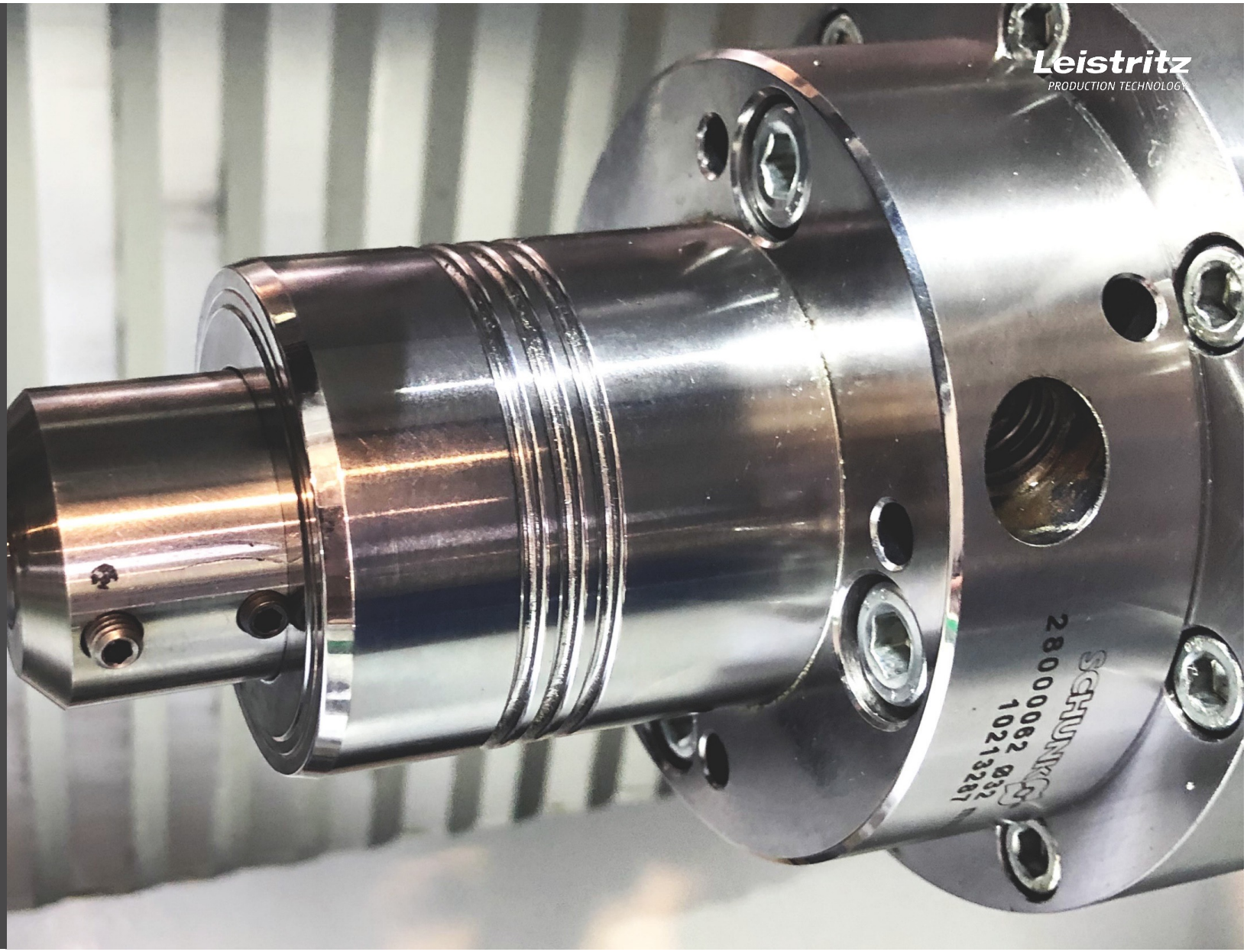

Whirling ring

Whirling ring

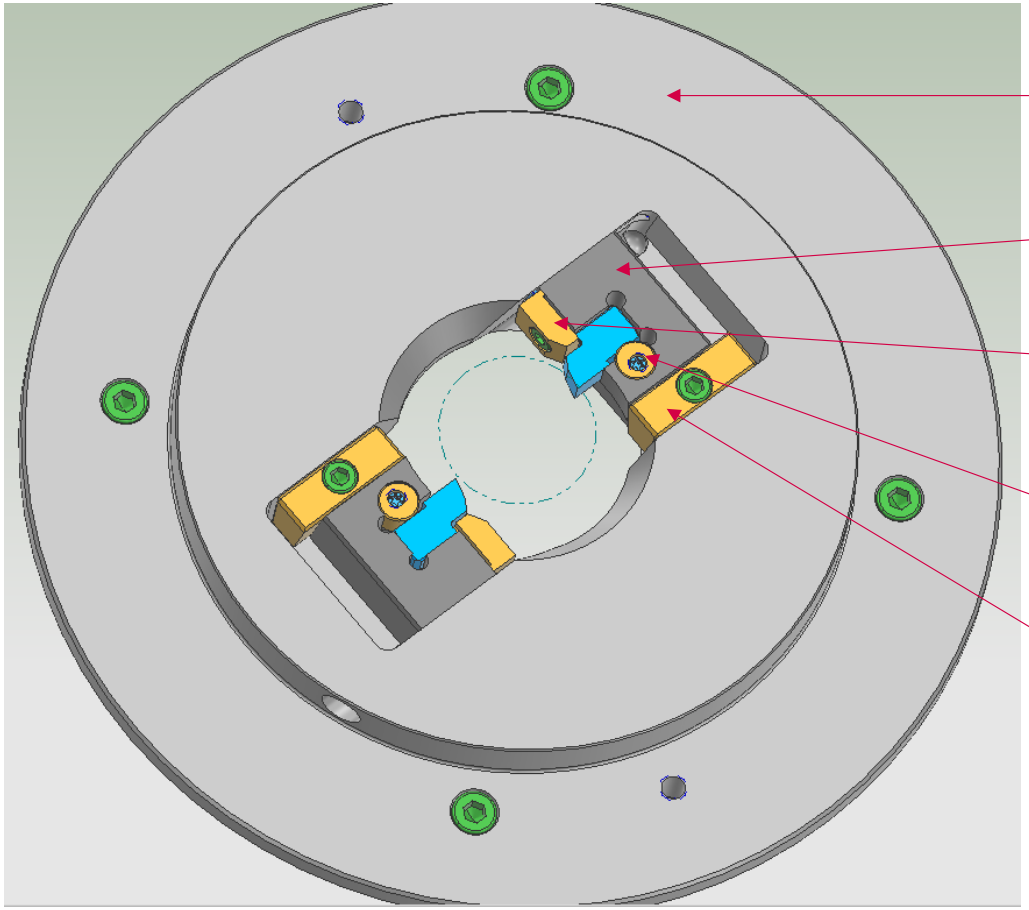

Tool body

Insert holder/cartridge

Clamping jaw for the insert (clamping radial)

Clamping wedge for the insert (clamping axial)

Clamping wedge for the Insert holder/cartridge

Leistritz
PRODUCTION TECHNOLOGY

Whirling inserts

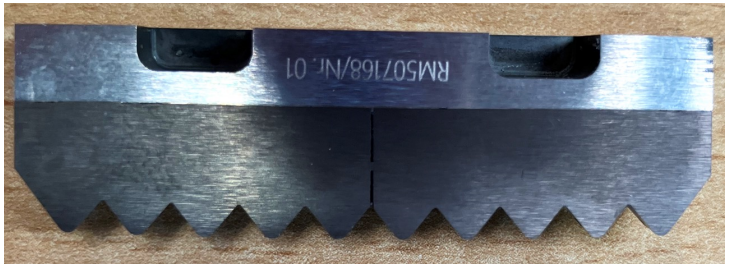

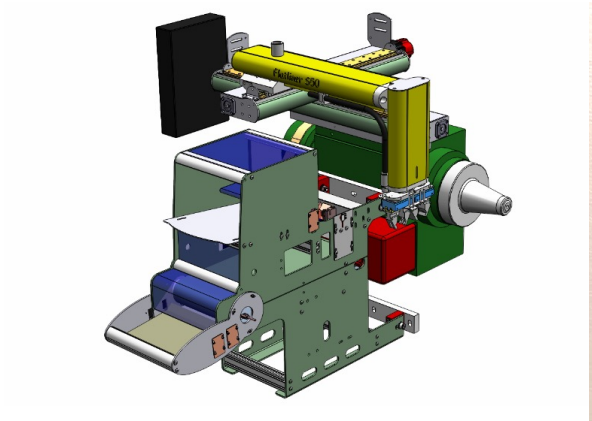

Automatic loading device

The "Flatliner 5025" loading unit is a pick and place system with three axes and a double gripper system. The drive of the loader axes consists of a servo motor and spindle drive. In this way, any position can be reached with an accuracy of < 0.05 mm. The vertical U-axis is actuated by an pneumatic cylinder.

CNC control FANUC 31i-B Plus

- digital interface to the modular designed servo drive system
- regenerative braking via the drive controllers
- Memory board interface in the display module for the data transmission
- CNC part program memory
- absolute and relative zero offset
- CNC programming acc. to DIN/ISO 66025
- subprogram technology
- parametric construction of parts program
- mathematical, locigal and arithmetical computational functions
  - extended programming functions (copy, del)
  - program check without axial movement possible

Technical data LWN 90 S

Leistritz
PRODUCTION TECHNOLOGY

Total machine	
Dimensions of the machine without chip conveyor	2.600 mm x 2.250 mm x 2.300 mm (LxDxH)
Weight	approx. 4.900 kg
Environmental conditions	
Temperatur	5 - 40° Celsius 20 – 23 °C ± 1,5 K/24h for machine accuracy
Relative humidity	20 - 75 %
Installation altitude	up to 1000m above sea level

Hydraulic & Electric	
max. system pressure	70 bars
Tank volume	23 l
Power supply	
Voltage	400 VAC
Frequency	50/60 Hz
Fuse protection	70 A
Connected load (Special voltages are optionally possible)	45 KVA

AWS 90-S	
max. hollow shaft bore	70 mm
Swivelling angle	± 35°
Speed range	8000 rpm.
Power	8 kW
Cooling	Water cooling
Lubrication	lifetime lubrication

Leistritz
PRODUCTION TECHNOLOGY

Thank You.

Leistritz Produktionstechnik GmbH
Tube Bending
High Precision Tools
Machine Tools
Precision Manufacturing
Leistritzstr. 1 – 11
92714 Pleystein
Germany
T: +49 9654 89-0

Leistritz Advanced Technologies Corp.
165 Chestnut Str.
07401 Allendale, NJ
USA
T: +1 201 93482-62

Leistritz Machinery (Taicang) Co., Ltd.
Building 2
No. 33 Fuzhou Rd. Nanjiao
Taicang, Jiangsu 215411
China
T: +86 512 5320 60-60

Leistritz Machinery (Taicang) Co., Ltd. Shanghai Branch
Rm 902, No. 400,
Zhejiang Zhong Rd.
Shanghai 200001
China
T: +86 21 6352-3268

At your Side. Globally.

production.leistritz.com