通用目录
GENERAL CATALOGUE

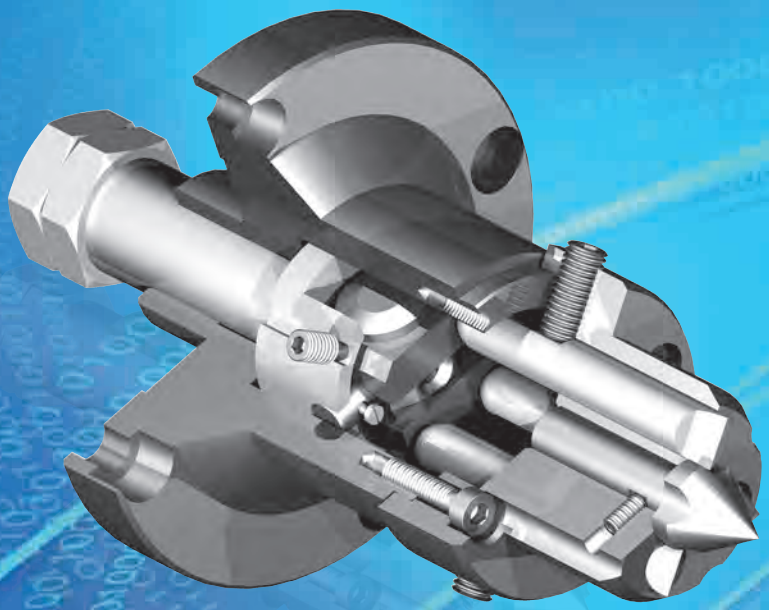

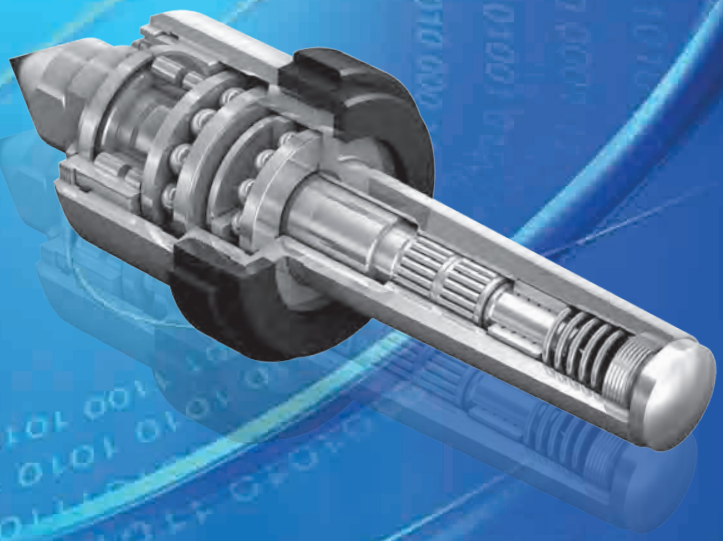

端面驱动顶尖
Face drivers

活顶尖
Precision live centers

2016

TECNOLOGIE FRB

Tecnologie FRB 设计、生产并销售多种专利系列产品，这些产品系列真正具有创新性，并融合了车削、齿轮切削及磨削等先进技术。
在上世纪 60 年代初，Tecnologie FRB 投入大量研发资金，确保其产品与最新尖端技术接轨，并不断完善产品性能。
因此，他们赢得了多家具有领先水平的意大利和国际公司的信任，而这些公司一直在使用他们的产品。他们还与具有领先水平的意大利及国外机床制造商的设计室密切合作。
尽管技术变革的步伐不断加快，Tecnologie FRB 仍将走在最前沿。

TECNOLOGIE FRB *design, manufacture and market many different patented product lines that are truly innovative and incorporate advanced technology turning, gear cutting and grinding concepts.*

TECNOLOGIE FRB *have invested heavily in Research & Development right from the day they started in early sixties, to ensure their products keep abreast of the latest technological advance and constantly improve their performance.*

This has won them the trust of many leading italian and international companies, who always use their products. They also work closely with the design offices of leading italian and foreign machine tools manufacturers.

TECNOLOGIE FRB *are going to continue to be at the forefront despite the ever increasing pace of technological change.*

目录

CONTENTS

含轴向负荷分布的活顶尖技术规范。最适用于含端面驱动顶尖的机械加工	TECHNICAL SPECIFICATIONS FOR LIVE CENTERS WITH AXIAL LOAD DISTRIBUTION, THE BEST FOR MACHINING WITH THE FACE DRIVER	页码 6
支架和拔取螺母的功能。如何拆卸可互换活顶尖。如何调节 80 系列活顶尖	FUNCTION OF THE SUPPORT AND EXTRACTION NUT, HOW TO REMOVE THE INTERCHANGEABLE CENTER, HOW TO ADJUST THE 80 SERIES LIVE CENTERS	页码 7
含轴向负荷分布的 80-85 系列活顶尖	80-85 SERIES LIVE CENTERS WITH AXIAL LOAD DISTRIBUTION	页码 8
FRB 活顶尖的可互换顶尖	INTERCHANGEABLE CENTERS FOR FRB LIVE CENTERS	页码 12
含管道车削活顶尖的加工头 - “80-T 和 85-T” 系列	HEAD CARRYING LIVE CENTER FOR PIPE TURNING - “80-T AND 85-T” SERIES	页码 14
承载固定顶尖的加工头	HEAD CARRYING DEAD CENTER	页码 15
用于管道车削和磨削的加工头	HEADS FOR TURNING AND GRINDING OF PIPES	页码 15
含轴车削拔取螺纹的固定顶尖	DEAD CENTERS WITH EXTRACTION THREAD FOR TURNING	页码 16
含轴和管道固定顶尖的顶尖车削	CENTER CARRYING DEAD CENTER FOR SHAFT AND PIPE TURNING	页码 17
硬车削活顶尖 - “2008 系列”	LIVE CENTERS FOR HARD TURNING - “2008 SERIES”	页码 18
高速活顶尖 - “2006 系列”	HIGH SPEED LIVE CENTERS - “2006 SERIES”	页码 19
自动车床弹性活顶尖 - “81 系列”	SPRUNG LIVE CENTERS FOR AUTHOMATIC LATHES - “81 SERIES”	页码 20
车削活顶尖 “2000 系列” — ECOLINE	LIVE CENTERS FOR TURNING “2000 SERIES” - ECOLINE	页码 22
磨削活顶尖 “92 系列”	LIVE CENTERS FOR GRINDING “92 SERIES”	页码 24
齿轮切削机活顶尖 “82 系列”	LIVE CENTERS FOR GEAR CUTTING MACHINE “82 SERIES”	页码 28
重型活顶尖 “86-87-88 系列”	LIVE CENTERS FOR HEAVY LOADS “86-87-88 SERIES”	页码 31
含 60° 硬金属夹点的常规固定顶尖	NORMAL DEAD CENTERS WITH A 60° POINT IN HARD METAL	页码 33
含 60° 硬金属夹点的延长固定顶尖	EXTENDED DEAD CENTERS WITH A 60° POINT IN HARD METAL	页码 34
含 60° 硬金属头的固定顶尖	DEAD CENTERS WITH A 60° HEAD IN HARD METAL	页码 35
FRB 端面驱动顶尖 - 使用和维护	FRB FACE DRIVERS - USE AND MAINTENANCE	页码 38
端面驱动顶尖适配器	FACE DRIVER ADAPTORS	页码 43
端面驱动顶尖 6/30，受载弹簧及备件	FACE DRIVERS 6/30, SPRING LOADED AND SPARE PARTS	页码 44

目录

CONTENTS

端面驱动顶尖 12/50，受载弹簧及备件	FACE DRIVERS 12/50, SPRING LOADED AND SPARE PARTS	页码 46
端面驱动顶尖 15/55，受载弹簧及备件	FACE DRIVERS 15/55, SPRING LOADED AND SPARE PARTS	页码 48
端面驱动顶尖 20/60，受载弹簧及备件	FACE DRIVERS 20/60, SPRING LOADED AND SPARE PARTS	页码 50
端面驱动顶尖 20/70，受载弹簧及备件	FACE DRIVERS 20/70, SPRING LOADED AND SPARE PARTS	页码 52
端面驱动顶尖 45/120，受载弹簧及备件	FACE DRIVERS 45/120, SPRING LOADED AND SPARE PARTS	页码 54
端面驱动顶尖 100/220，受载弹簧及备件	FACE DRIVERS 100/220, SPRING LOADED AND SPARE PARTS	页码 56
端面驱动顶尖 180/300，受载弹簧及备件	FACE DRIVERS 180/300, SPRING LOADED AND SPARE PARTS	页码 58
液压传动端面驱动顶尖 12/50 及备件	FACE DRIVERS 12/50, HYDRAULICALLY OPERATED AND SPARE PARTS	页码 60
液压传动端面驱动顶尖 15/55 及备件	FACE DRIVERS 15/55, HYDRAULICALLY OPERATED AND SPARE PARTS	页码 62
液压传动端面驱动顶尖 20/60 及备件	FACE DRIVERS 20/60, HYDRAULICALLY OPERATED AND SPARE PARTS	页码 64
液压传动端面驱动顶尖 20/70 及备件	FACE DRIVERS 20/70, HYDRAULICALLY OPERATED AND SPARE PARTS	页码 66
液压传动端面驱动顶尖 45/120 及备件	FACE DRIVERS 45/120, HYDRAULICALLY OPERATED AND SPARE PARTS	页码 68
液压传动端面驱动顶尖 100/220 及备件	FACE DRIVERS 100/220, HYDRAULICALLY OPERATED AND SPARE PARTS	页码 70
液压传动端面驱动顶尖 180/300 及备件	FACE DRIVERS 180/300, HYDRAULICALLY OPERATED AND SPARE PARTS	页码 72
含固定传动齿的齿轮切削机端面驱动顶尖	FACE DRIVERS FOR GEAR CUTTING MACHINES WITH FIXED DRIVING TEETH	页码 74
齿轮切削专用端面驱动顶尖	SPECIAL FACE DRIVERS FOR GEAR CUTTING	页码 75
含可互换传动销的齿轮切削端面驱动顶尖 15/55	FACE DRIVERS 15/55 FOR GEAR CUTTING WITH INTERCHANGEABLE DRIVING PINS	页码 76
含可互换传动销的齿轮切削端面驱动顶尖 20/70	FACE DRIVERS 20/70 FOR GEAR CUTTING WITH INTERCHANGEABLE DRIVING PINS	页码 77
含可互换传动销的齿轮切削端面驱动顶尖 45/150	FACE DRIVERS 45/150 FOR GEAR CUTTING WITH INTERCHANGEABLE DRIVING PINS	页码 78
管道驱动顶尖	DRIVERS FOR PIPES	页码 79
磨削端面驱动顶尖的使用和维护	USE AND MAINTENANCE OF THE FACE DRIVERS FOR GRINDING	页码 80
磨削端面驱动顶尖 12/70 及备件	FACE DRIVERS 12/70 FOR GRINDING AND SPARE PARTS	页码 82
磨削端面驱动顶尖 15/75 及备件	FACE DRIVERS 15/75 FOR GRINDING AND SPARE PARTS	页码 84

目录

CONTENTS

磨削端面驱动顶尖 20/80 及备件	FACE DRIVERS 20/80 FOR GRINDING AND SPARE PARTS	页码 86
磨削端面驱动顶尖 20/100 及备件	FACE DRIVERS 20/100 FOR GRINDING AND SPARE PARTS	页码 88
磨削端面驱动顶尖 45/150 及备件	FACE DRIVERS 45/150 FOR GRINDING AND SPARE PARTS	页码 90
磨削端面驱动顶尖 100/300 和 180/400 及备件	FACE DRIVERS 100/300 AND 180/400 FOR GRINDING AND SPARE PARTS	页码 92
检查机床轴向推力的袋式测力传感器	BAG LOAD CELL FOR CHECKING AXIAL THRUST ON MACHINE TOOLS	页码 94
磨床推杆及液压缸	PUSHER AND HYDRAULIC CYLINDER FOR GRINDING MACHINES	页码 95

已获专利的活顶尖
PATENTED LIVE CENTERS

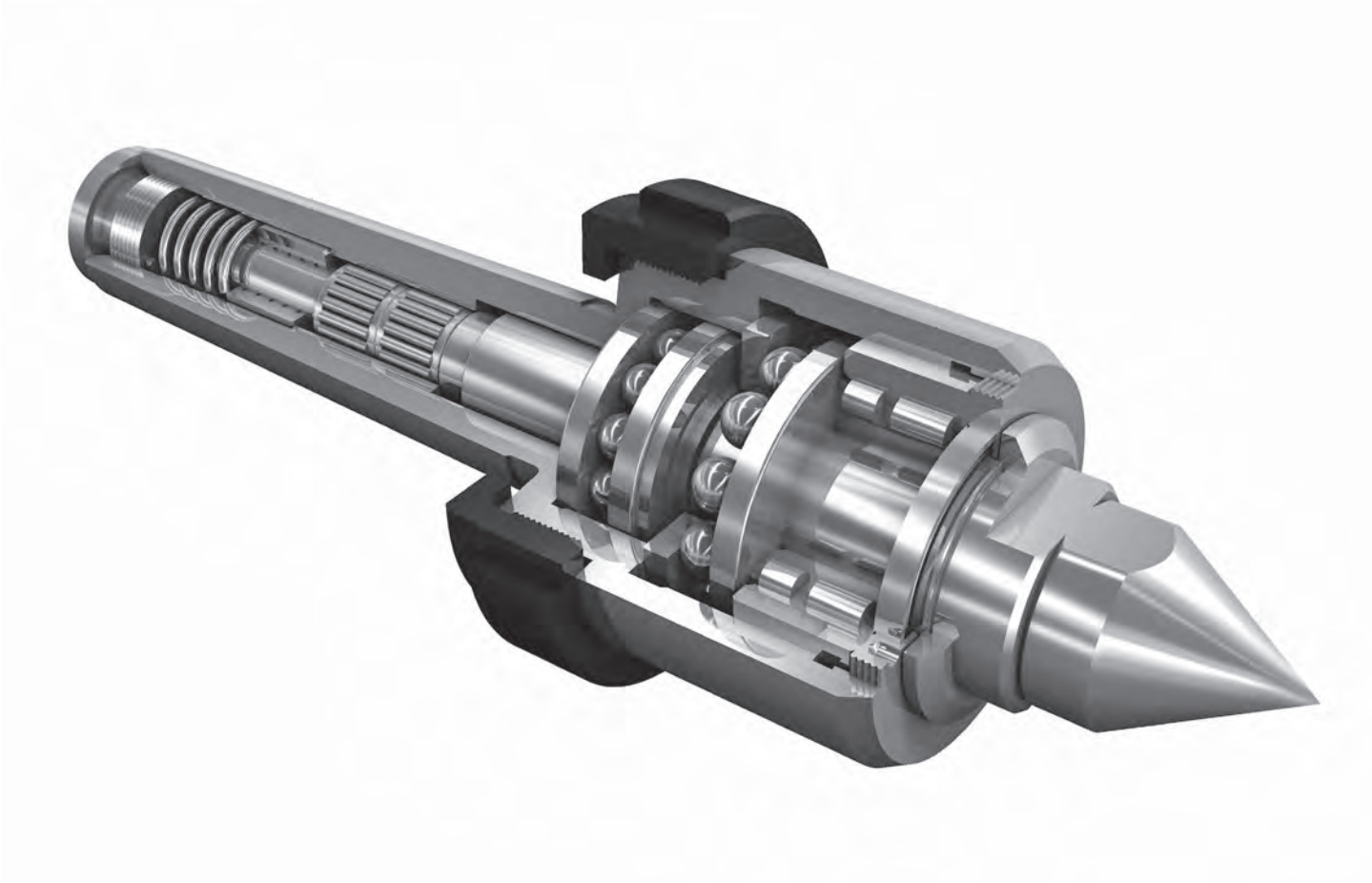

具有轴向负荷分布的活顶尖
LIVE CENTERS WITH AXIAL LOAD DISTRIBUTION

含轴向负荷分布的活顶尖“80”和“85”系列，最适用于含端面活顶尖的机械加工，是世界上仅有的一种机械装置

LIVE CENTERS WITH AXIAL LOAD DISTRIBUTION “80” AND “85” SERIES: THE BEST FOR MACHINING WITH THE FACE DRIVER THE ONLY MECHANISM OF ITS KIND IN THE WORLD

专利的
PATENTED

技术规范

含轴向负荷分布的 FRB 活顶尖有两个止推轴承 ⑯ 和 ⑰，其间插有一个专门设计的蝶形弹簧垫圈 ⑤，用于分配两个轴承之间的负荷。当推力作用于活顶尖时 ②，它会最多回缩 0.25 mm (0.0098 英寸)，相当于 500 Kg (1102.3 lb) 的 FRB 活顶尖 4 号莫氏锥度轴向负荷被后轴承吸收 ⑰。

由于顶尖轴 ③ 已回缩 0.25 mm (0.0098 英寸)，它会停留在圆柱滚子轴承的内环上 ⑭，因而可将剩余推力传给前轴承 ⑯。该已获专利的活顶尖可向轴承施加相当高的活顶尖推力。

采用端面驱动顶尖车削轴时，可通过相应高的进给速度和切削深度进行加工。

两个滚子保持架 ⑱ 支持轴向重负荷，而且由弹簧 ⑧ 固定的一个减震衬垫 ⑦ 可防止震动。可用卡钳式扳手调节活顶尖前部的螺母 ④ 以消除磨损轴承产生的间隙。

切屑护环 ⑩ 可保证密封环 ⑫ 与碎屑完全隔开。后拔取螺母 ⑳ 可防止偏移和震动。

TECHNICAL SPECIFICATIONS

The FRB live center with axial load distribution has two thurst bearings ⑯ and ⑰ between which a specially designed belleville spring washer ⑤ is inserted to distribute the load between the two bearings. When a thrust acts on the center ② it will retract up to 0.25 mm (inch. 0.0098) which corresponds to 500 Kg (1102.3 lb) of axial load for the FRB live center morse taper 4 that is absorbed by the back bearing ⑰.

As the center shaft ③ has now moved inside by 0.25 mm (inch. 0.0098) it comes to rest on the inner ring of the cylindrical roller bearing ⑭, thereby transmitting the remaining force to the front bearing ⑯. This patented center allows the center to apply a very high rate of live center thrust to the process.

When turning shafts held by face driver, machining can be carried out with an accordingly high feed rate and cutting depth.

The two roller cages ⑱ support heavy radial loads, and a vibrations-damping bush ⑦ kept stiff by a spring ⑧ which prevents vibration. The nut ④ at the front of the live center can be adjusted to eliminate the play caused by worn bearings by means of a caliper wrench.

A chip guard ring ⑩ guarantees complete insulation of the sealing ring ⑫ from chips. The back extraction nut ⑳ prevents deflection and vibration.

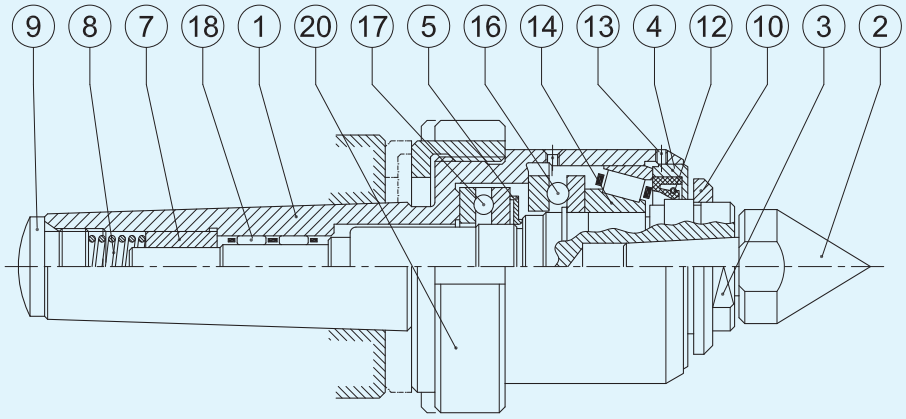

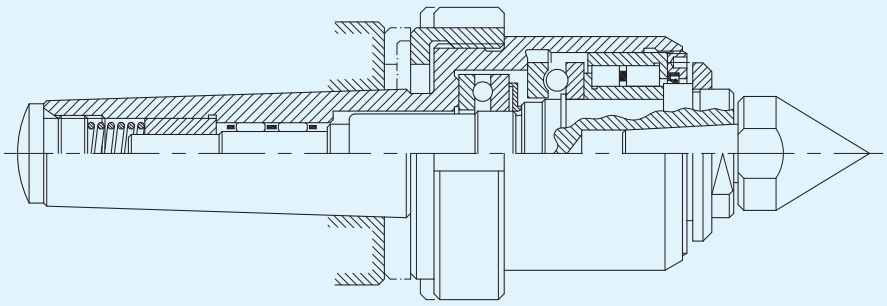

支架和拔取螺母

THE SUPPORT AND EXTRACTION NUT

支架和拔取螺母 *I THE SUPPORT AND EXTRACTION NUT*

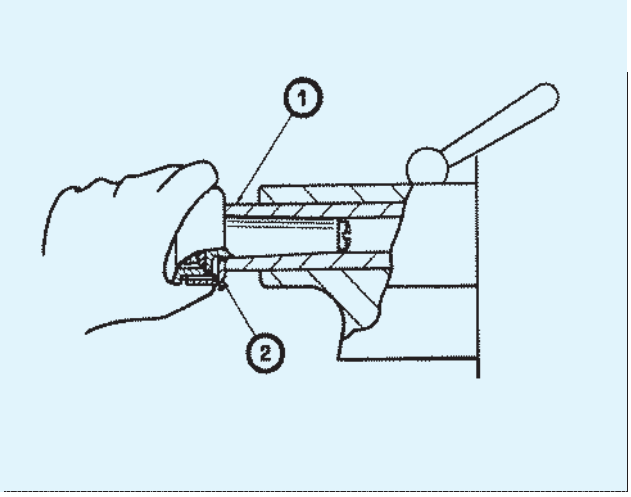

装在本体上的拔取螺母使活顶尖具有最大刚度并可检查由本体导致的偏移或震动。应按以下程序进行装配：
(a) 将活顶尖装在顶针套内；
(b) 旋松螺母直至其停留在活顶尖套内；
(c) 活顶尖置入到位后，用双手紧固。
(1) 活顶尖套 .
(2) 活顶尖套上的活顶尖螺母。

The extraction nut is fitted on the basic body to give the live center maximum stiffness and check deflection or vibrations caused by deformation of the basic body.
To fix. follow this procedure:
(a) fix the live center in the tailstock sleeve;
(b) unscrew the nut until it comes to rest on the live center sleeve;
(c) when it is in position tighten firmly with both hands.
(1) Live center sleeve.
(2) Live center nut in position on the live center sleeve.

拆下可互换顶尖 *I REMOVING THE INTERCHANGEABLE CENTER*

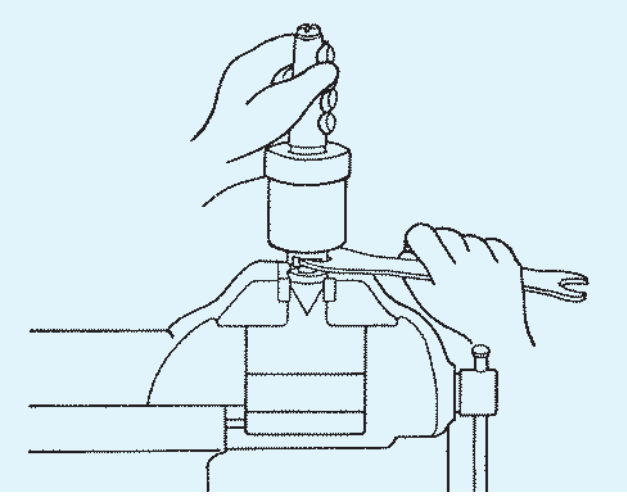

用扳手在活顶尖轴四周施力并在紧固螺钉时旋紧。

Fit the spanner around the live center shaft and rotate firmly as when tightening a screw.

调节80系列活顶尖 *I ADJUSTING THE 80 SERIES LIVE CENTERS*

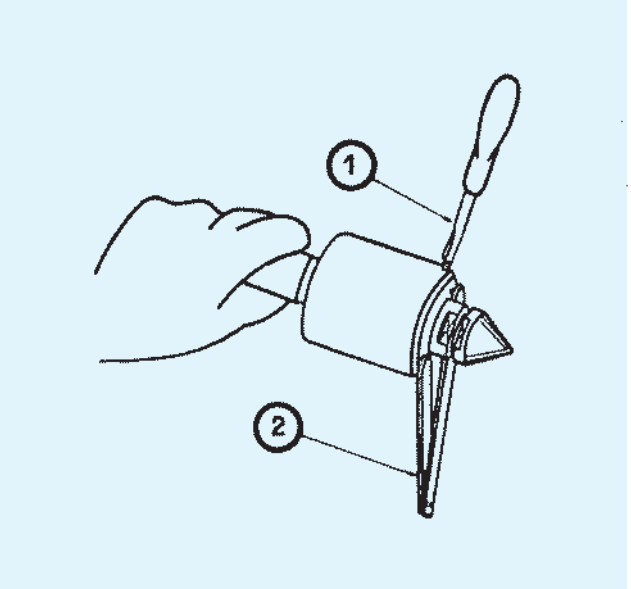

为确保定位精度并避免震动，有时必须通过以下程序调节活顶尖：紧固螺母直至圆柱滚子轴承套圈紧固在锥体上。
(1) 松开调节螺母螺钉。
(2) 用转矩扳手松开或紧固活顶尖调节螺母。
85 系列活顶尖无需调节。

注：由于这是一个含轴向负荷分布的活顶尖，当它未靠紧工件（未承受轴向负荷时）时，移动起来不太平稳；这是由于两个止推轴承之间分配轴向负荷的弹簧会产生压力。

To ensure setting accuracy and avoid vibrations the live centers must occasionally be adjusted using the following procedure: tighten the nut until the cylindrical roller bearing ring is positioned firmly on the tapers.
(1) Loosening the adjusting nut screw.
(2) Use torque wrench for loosening or tightening the live center adjusting nut.
The 85 live centers need no adjusting.

Note: *As this is a live center with axial load distribution when is not against the workpiece (when it is not subjected to axial load) it does not travel smoothly; this is due to the countued pressure of the spring which distributes the axial load between the two thrust bearings.*

含轴向负荷分布和径向圆锥滚子轴承的 FRB 活顶尖。最适用于含端面驱动顶尖的机械加工

FRB LIVE CENTER WITH AXIAL LOAD DISTRIBUTION AND RADIAL TAPER ROLLER BEARING. THE BEST FOR MACHINING WITH THE FACE DRIVER

“ 80 系列 ” - *“80 SERIES”*

含可互换活顶尖支撑轴的活顶尖
LIVE CENTER WITH INTERCHANGEABLE CENTER SUPPORT SHAFT

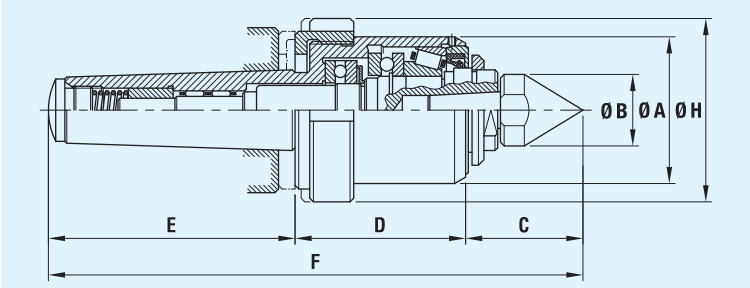

特性

可互换顶尖使操作员能够迅速装配手头工作所需要的顶尖，并轻松更换磨损的顶尖，而无需更换整个轴。因此它是用于执行各种不同机械加工工作环境的理想部件。偏心度公差为 0.01。

FEATURES

The interchangeable center enables the operator to rapidly fit the center required for the task at hand and to easily replace worn centers without having to change the complete shaft. It is therefore ideal for a working environment in which different types of machining are carried out. Eccentricity tolerance: 0.01.

代码 *Code*	莫氏锥度 *Morse Taper*	尺寸 mm（英寸）/ Dimensions in mm (inch)						
		C	*D*	*E*	*Ø A*	*Ø B*	*F*	*Ø H*
010180121	CM2 / *MT2*	38 (1.496)	56 (2.205)	67 (2.638)	49 (1.929)	21 (0.827)	161 (6.339)	58 (2.283)
010180131	CM3 / *MT3*	44 (1.732)	62.5 (2.461)	83 (3.268)	56.5 (2.224)	26 (1.024)	189.5 (7.461)	64 (2.520)
010180141	CM4 / *MT4*	48.5 (1.909)	68 (2.677)	103 (4.055)	62 (2.441)	29 (1.142)	219.5 (8.642)	74 (2.913)
010180151	CM5 / *MT5*	54 (2.126)	82 (3.228)	136 (5.354)	80 (3.150)	34 (1.339)	272 (10.709)	87 (3.425)
010180161	CM6 / *MT6*	65 (2.559)	123 (4.843)	189 (7.441)	119 (4.685)	43 (1.693)	376 (14.803)	130 (5.118)

含整体轴的活顶尖
LIVE CENTER WITH INTEGRAL SHAFT

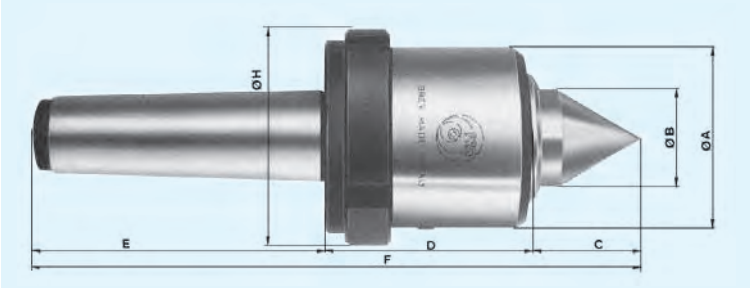

特性

整体轴可保证更大的刚度并确保极小的跳动误差（在尖部及工件处测出）。因此它适合于偏心度公差要求为 0.005 的任务，同时由于轴从本体伸出量小，它也适合于加工重型工件。

FEATURES

The integral shaft guarantees greater stiffness and ensures extremely small runout error (measured at the tip and on the workpiece). It is therefore suitable for tasks requiring 0.005 eccentricity tolerance and because of the reduced protrusion of the shaft from the body, it is also suitable for machining very heavy workpieces.

代码 *Code*	莫氏锥度 *Morse Taper*	尺寸 mm（英寸）/ Dimensions in mm (inch)						
		C	*D*	*E*	*Ø A*	*Ø B*	*F*	*Ø H*
010180123	CM2 / *MT2*	28 (1.102)	56 (2.205)	67 (2.638)	49 (1.929)	21 (0.827)	151 (5.945)	58 (2.283)
010180133	CM3 / *MT3*	35.5 (1.398)	62.5 (2.461)	83 (3.268)	56.5 (2.224)	29 (1.142)	181 (7.126)	66 (2.598)
010180143	CM4 / *MT4*	40 (1.575)	69 (2.717)	102 (4.016)	61.5 (2.421)	33 (1.299)	211 (8.307)	74 (2.913)
010180153	CM5 / *MT5*	45 (1.772)	82 (3.228)	136 (5.354)	80 (3.150)	36 (1.417)	263 (10.354)	87 (3.425)
010180163	CM6 / *MT6*	67 (2.638)	123 (4.843)	189 (7.441)	119 (4.685)	57.5 (2.264)	378 (14.882)	130 (5.118)

含整体轴和硬质合金镶尖刀片的活顶尖
LIVE CENTER WITH INTEGRAL SHAFT AND CARBIDE TIP INSERT

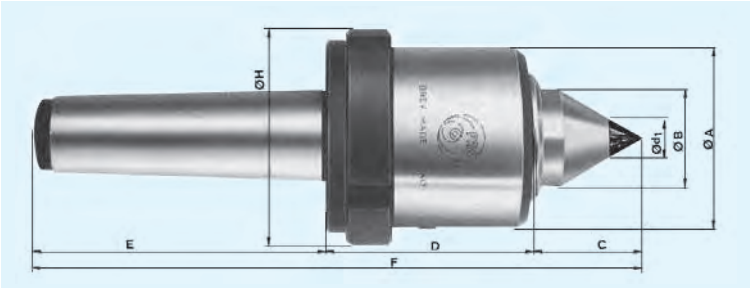

特性

它也用于车削不含顶尖或含粗顶尖的零件。整体轴可确保极小的跳动误差（在尖部及工件处测出），而且其超卓的刚度可抑制震动。因此它适合于偏心度公差在 0.005 范围内的加工任务。

FEATURES

It is also used for turning parts without centers or with rough centers. The integral shaft ensures extremely small runout error (measured at the tip and on the workpiece) and its superior stiffness checks vibration. It is therefore suitable for machining to within eccentricity tolerances of 0.005.

代码 *Code*	莫氏锥度 *Morse Taper*	尺寸 mm（英寸）/ Dimensions in mm (inch)							
		C	*D*	*E*	*Ø A*	*Ø B*	*F*	*Ø d1*	*Ø H*
010180125	CM2 / *MT2*	28 (1.102)	56 (2.205)	67 (2.638)	49 (1.929)	21 (0.827)	151 (5.945)	6 (0.236)	58 (2.283)
010180135	CM3 / *MT3*	35.5 (1.398)	62.5 (2.461)	83 (3.268)	56.5 (2.224)	29 (1.142)	181 (7.126)	10 (0.394)	66 (2.598)
010180145	CM4 / *MT4*	40 (1.575)	68 (2.677)	103 (4.055)	62 (2.441)	33 (1.299)	211 (8.307)	12 (0.472)	74 (2.913)
010180155	CM5 / *MT5*	45 (1.772)	82 (3.228)	136 (5.354)	80 (3.150)	36 (1.417)	263 (10.354)	18 (0.709)	87 (3.425)
010180165	CM6 / *MT6*	67 (2.638)	123 (4.843)	189 (7.441)	119 (4.685)	57.5 (2.264)	378 (14.882)	20 (0.787)	130 (5.118)

含延长整体轴的活顶尖
LIVE CENTER WITH EXTENDED INTEGRAL SHAFT

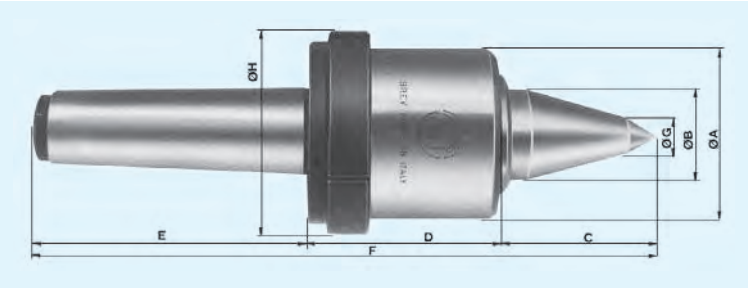

特性

延长整体轴可确保极小的工件跳动误差，而且它的细长尖端使其非常适合加工较薄的工件，甚至在靠近活顶尖时也是这样。因此该活顶尖非常适合小尺寸部件的精密加工。

FEATURES

The extended integral shaft ensures extremely small runout error on the workpiece and its slender point makes it ideal for machining thin workpieces, even when close to the live center. This live center is therefore ideal for precision machining of small sized components.

代码 Code	莫氏锥度 Morse Taper	尺寸 mm（英寸）/ Dimensions in mm (inch)							
		C	D	E	Ø A	Ø B	F	Ø G	Ø H
010180124	CM2 / *MT2*	47 (1.850)	56 (2.205)	67 (2.638)	49 (1.929)	21 (0.827)	170 (6.693)	8 (0.315)	58 (2.283)
010180134	CM3 / *MT3*	55 (2.165)	62.5 (2.461)	83 (3.268)	56.5 (2.224)	29 (1.142)	200.5 (7.894)	12 (0.472)	66 (2.598)
010180144	CM4 / *MT4*	60 (2.362)	68 (2.677)	103 (4.055)	62 (2.441)	33 (1.299)	231 (9.094)	14 (0.551)	74 (2.913)
010180154	CM5 / *MT5*	62 (2.441)	82 (3.228)	136 (5.354)	80 (3.150)	36 (1.417)	280 (11.024)	16 (0.630)	87 (3.425)
010180164	CM6 / *MT6*	90 (3.543)	123 (4.843)	189 (7.441)	119 (4.685)	57.5 (2.264)	401 (15.787)	25 (0.984)	130 (5.118)

含延长整体轴和硬质合金镶尖刀片的活顶尖
LIVE CENTER WITH EXTENDED INTEGRAL SHAFT AND CARBIDE TIP INSERT

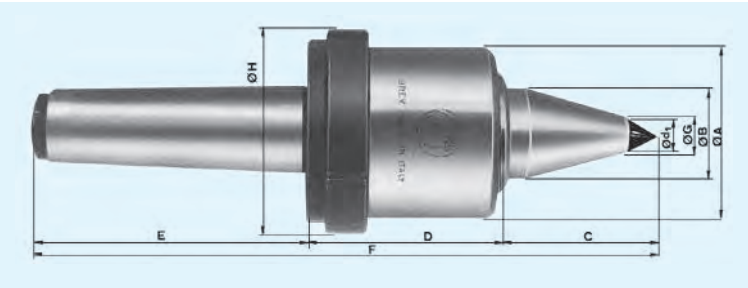

特性

它用于车削不含顶尖或含粗顶尖零件的特殊情况。延长整体轴可确保极小的工件跳动误差，而且它的细长尖端使其非常适合加工较薄的工件，甚至在靠近活顶尖时也是这样。因此该活顶尖非常适合小尺寸部件的精密加工。

FEATURES

It is used in special cases for turning parts without centers or with rough centers. The extended integral shaft ensures extremely small runout error on the workpiece and its slender point makes it ideal for machining thin workpieces, even when close to the live center. This live center is therefore ideal for precision machining of small sized components.

代码 Code	莫氏锥度 Morse Taper	尺寸 mm（英寸）/ Dimensions in mm (inch)								
		C	D	E	Ø A	Ø B	F	Ø G	Ø d1	Ø H
010180126	CM2 / *MT2*	47 (1.850)	56 (2.205)	67 (2.638)	49 (1.929)	21 (0.827)	170 (6.693)	8 (0.315)	6 (0.236)	58 (2.283)
010180136	CM3 / *MT3*	55 (2.165)	62.5 (2.461)	83 (3.268)	56.5 (2.224)	29 (1.142)	200.5 (7.894)	12 (0.472)	10 (0.394)	66 (2.598)
010180146	CM4 / *MT4*	60 (2.362)	68 (2.677)	103 (4.055)	62 (2.441)	33 (1.299)	231 (9.094)	15 (0.591)	12 (0.472)	74 (2.913)
010180156	CM5 / *MT5*	62 (2.441)	82 (3.228)	136 (5.354)	80 (3.150)	36 (1.417)	280 (11.024)	18 (0.709)	14 (0.551)	87 (3.425)
010180166	CM6 / *MT6*	90 (3.543)	123 (4.843)	189 (7.441)	119 (4.685)	57.5 (2.264)	401 (15.787)	25 (0.984)	20 (0.787)	130 (5.118)

负荷图
LOAD CHARTS

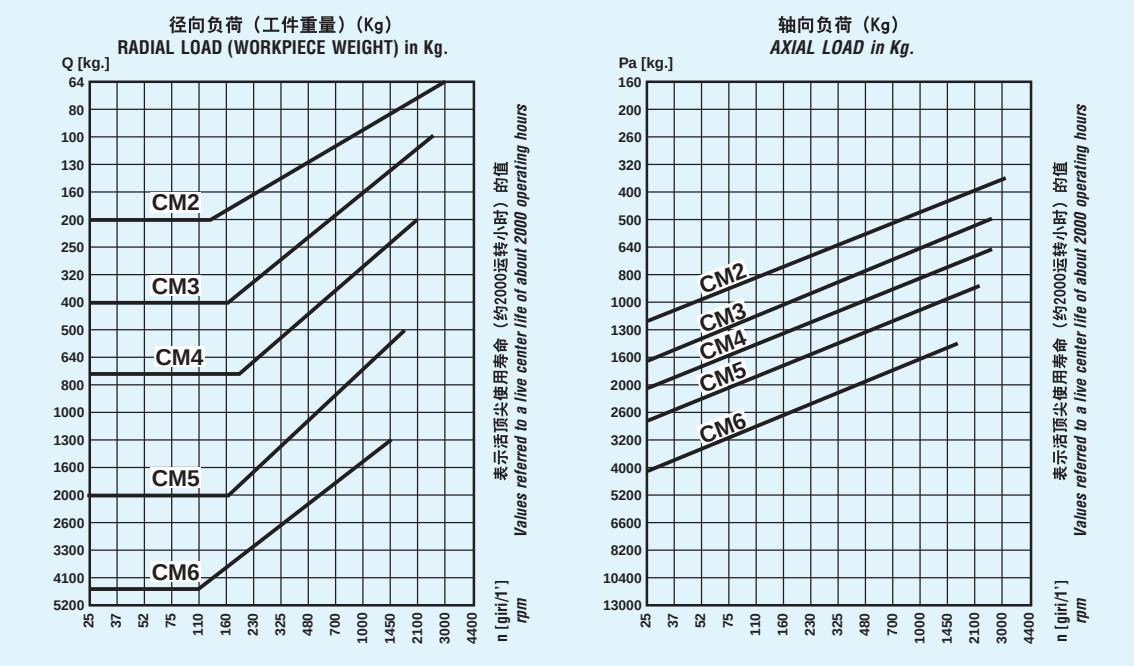

注：该负荷值指含整体轴及约 2000 运转小时活顶尖使用寿命的模型。测试显示，根据活顶尖执行加工任务的不同类型，活顶尖可用于长于或短于该运转小时的使用周期。对于其他类型的活顶尖（含可互换顶尖和延长整体轴），图中显示的负荷值应减小。这些值在第一种情况下是由于顶尖可互换性产生，而在第二种情况下则是由于整体轴延长所致。

实例：含整体轴（n= 1000 r.p.m.）的 MT4 活顶尖的允许最大负荷为：
径向负荷 Q = 320 kg
轴向负荷 Pa = 900 kg

Notes: The load values refer to the model with an integral shaft and a live center life of about 2000 operating hours. Tests have shown that the live center can however be used fora longer or shorter period than this, depending on the types of machining task it undertakes. For other types of live center (with interchangeable center and extended integral shaft) the load values indicated on the graphs should be reduced. These are a result of the center interchangeability in the first case and in the second are due to the extension of the integral shaft.

Eiample: Permitted maximum loads for the MT4 live center with Integral shaft at n= 1000 r.p.m.
Radial load Q = 320 kg
Axial load Pa = 900 kg

含轴向负荷分布及径向圆柱滚子轴承的 FRB 活顶尖
最适用于含端面驱动顶尖的机械加工

FRB LIVE CENTER WITH AXIAL LOAD DISTRIBUTION AND RADIAL CYLINDRICAL ROLLER BEARING. THE BEST FOR MACHINING WITH THE FACE DRIVER

“ 85 系列 ” - “85 SERIES”

含可互换顶尖支撑轴的活顶尖
LIVE CENTER WITH INTERCHANGEABLE CENTER SUPPORT SHAFT

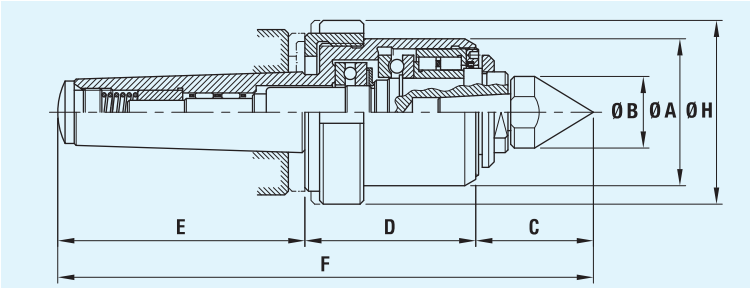

特性

可互换顶尖使操作员能够迅速装配手头工作所需要的顶尖，并轻松更换磨损的顶尖，而无需更换整个轴。因此它是用于执行各种不同机械加工工作环境的理想部件。偏心度公差为 0.01。

FEATURES

The interchangeable center enables the operator to rapidly fit the center required for the task at hand and to easily replace worn centers without having to change the complete shaft. It is therefore ideal for a working environment in which different types of machining are carried out. Eccentricity tolerance: 0.01.

代码 *Code*	莫氏锥度 *Morse Taper*	尺寸 mm（英寸）/ Dimensions in mm (inch)						
		C	*D*	*E*	*Ø A*	*Ø B*	*F*	*Ø H*
010185121	CM2 / *MT2*	38 (1.496)	56 (2.205)	67 (2.638)	49 (1.929)	21 (0.827)	161 (6.339)	58 (2.283)
010185131	CM3 / *MT3*	44 (1.732)	62.5 (2.461)	83 (3.268)	56.5 (2.224)	26 (1.024)	189.5 (7.461)	64 (2.520)
010185141	CM4 / *MT4*	48.5 (1.909)	68 (2.677)	103 (4.055)	62 (2.441)	29 (1.142)	219.5 (8.642)	74 (2.913)
010185151	CM5 / *MT5*	54 (2.126)	82 (3.228)	136 (5.354)	80 (3.150)	34 (1.339)	272 (10.709)	87 (3.425)
010185161	CM6 / *MT6*	65 (2.559)	123 (4.843)	189 (7.441)	119 (4.685)	43 (1.693)	376 (14.803)	130 (5.118)

含整体轴的活顶尖
LIVE CENTER WITH INTEGRAL SHAFT

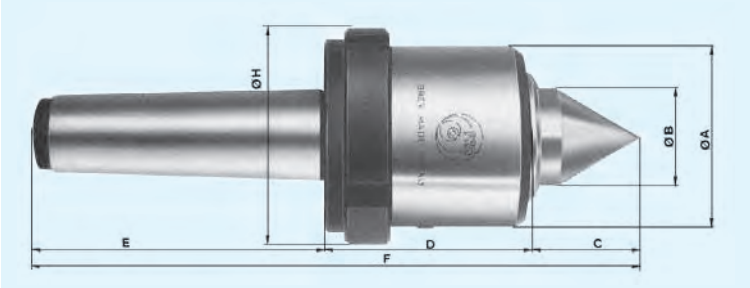

特性

整体轴可保证更大的刚度并确保极小的跳动误差（在尖部及工件处测出）。因此它适合于偏心度公差要求为 0.005 的任务，同时由于轴从本体伸出量小，它也适合于加工重型工件。

FEATURES

The integral shaft guarantees greater stiffness and ensures extremely small runout error (measured at the tip and on the workpiece). It is therefore suitable for tasks requiring 0.005 eccentricity tolerance and because of the reduced protrusion of the shaft from the body, it is also suitable for machining very heavy workpieces.

代码 *Code*	莫氏锥度 *Morse Taper*	尺寸 mm（英寸）/ Dimensions in mm (inch)						
		C	*D*	*E*	*Ø A*	*Ø B*	*F*	*Ø H*
010185123	CM2 / *MT2*	28 (1.102)	56 (2.205)	67 (2.638)	49 (1.929)	21 (0.827)	151 (5.945)	58 (2.283)
010185133	CM3 / *MT3*	35.5 (1.398)	62.5 (2.461)	83 (3.268)	56.5 (2.224)	29 (1.142)	181 (7.126)	66 (2.598)
010185143	CM4 / *MT4*	40 (1.575)	68 (2.677)	103 (4.055)	61,5 (2.421)	33 (1.299)	211 (8.307)	74 (2.913)
010185153	CM5 / *MT5*	45 (1.772)	82 (3.228)	136 (5.354)	80 (3.150)	36 (1.417)	263 (10.354)	87 (3.425)
010185163	CM6 / *MT6*	67 (2.638)	123 (4.843)	189 (7.441)	119 (4.685)	57.5 (2.264)	378 (14.882)	130 (5.118)

含整体轴和硬质合金镶尖刀片的活顶尖
LIVE CENTER WITH INTEGRAL SHAFT AND CARBIDE TIP INSERT

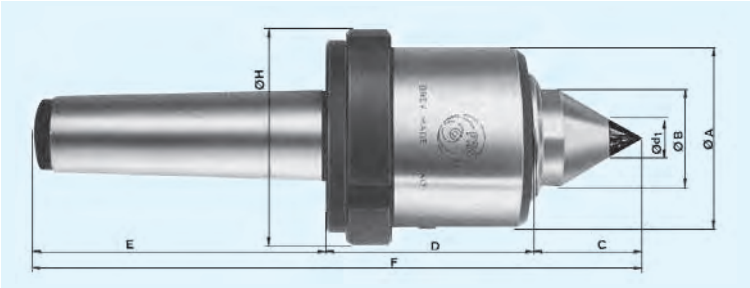

特性

它也用于车削不含顶尖或含粗顶尖的零件。整体轴可确保极小的跳动误差（在尖部及工件处测出），而且其超卓的刚度可抑制震动，因此它适合于偏心度公差在 0.005 范围内的加工任务。

FEATURES

It is also used for turning parts without centers or with rough centers. The integral shaft ensures extremely small runout error (measured at the tip and on the workpiece) and its superior stiffness checks vibration. It is therefore suitable for machining to within eccentricity tolerances of 0.005.

代码 *Code*	莫氏锥度 *Morse Taper*	尺寸 mm（英寸）/ Dimensions in mm (inch)							
		C	*D*	*E*	*Ø A*	*Ø B*	*F*	*Ø 1*	*Ø H*
010185125	CM2 / *MT2*	28 (1.102)	56 (2.205)	67 (2.638)	49 (1.929)	21 (0.827)	151 (5.945)	6 (0.236)	58 (2.283)
010185135	CM3 / *MT3*	35.5 (1.398)	62.5 (2.461)	83 (3.268)	56.5 (2.224)	29 (1.142)	181 (7.126)	10 (0.394)	66 (2.598)
010185145	CM4 / *MT4*	40 (1.575)	68 (2.677)	103 (4.055)	62 (2.441)	33 (1.299)	211 (8.307)	12 (0.472)	74 (2.913)
010185155	CM5 / *MT5*	45 (1.772)	82 (3.228)	136 (5.354)	80 (3.150)	36 (1.417)	263 (10.354)	20 (0.787)	87 (3.425)
010185165	CM6 / *MT6*	67 (2.638)	123 (4.843)	189 (7.441)	119 (4.685)	57.5 (2.264)	378 (14.882)	20 (0.787)	130 (5.118)

含延长整体轴的活顶尖
LIVE CENTER WITH EXTENDED INTEGRAL SHAFT

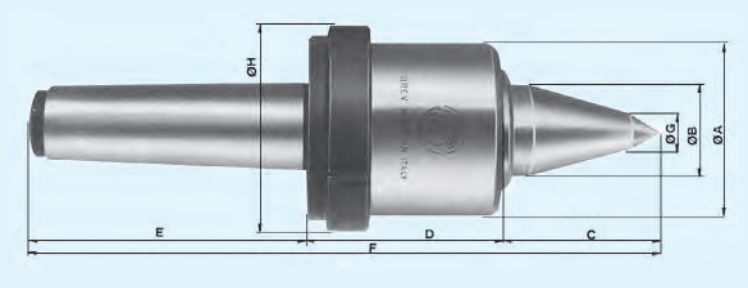

特性

延长整体轴可确保极小的工件跳动误差，而且它的细长尖端使其非常适合加工较薄的工件，甚至在靠近活顶尖时也是这样。因此该活顶尖非常适合小尺寸部件的精密加工。

FEATURES

The extended integral shaft ensures extremely small runout error on the workpiece and its slender point makes it ideal for machining thin workpieces, even when close to the live center. This live center is therefore ideal for precision machining of small sized components.

代码 Code	莫氏锥度 Morse Taper	尺寸 mm（英寸）/ Dimensions in mm (inch)							
		C	D	E	Ø A	Ø B	F	Ø G	Ø H
010185124	CM2 / *MT2*	47 (1.850)	56 (2.205)	67 (2.638)	49 (1.929)	21 (0.827)	170 (6.693)	8 (0.315)	58 (2.283)
010185134	CM3 / *MT3*	55 (2.165)	62.5 (2.461)	83 (3.268)	56.5 (2.224)	29 (1.142)	200.5 (7.894)	12 (0.472)	66 (2.598)
010185144	CM4 / *MT4*	60 (2.362)	68 (2.677)	103 (4.055)	62 (2.441)	33 (1.299)	231 (9.094)	14 (0.551)	74 (2.913)
010185154	CM5 / *MT5*	62 (2.441)	82 (3.228)	136 (5.354)	80 (3.150)	36 (1.417)	280 (11.024)	16 (0.630)	87 (3.425)
010185164	CM6 / *MT6*	90 (3.543)	123 (4.843)	189 (7.441)	119 (4.685)	57.5 (2.264)	401 (15.787)	25 (0.984)	130 (5.118)

含延长整体轴和硬质合金镶尖刀片的活顶尖
LIVE CENTER WITH EXTENDED INTEGRAL SHAFT AND CARBIDE TIP INSERT

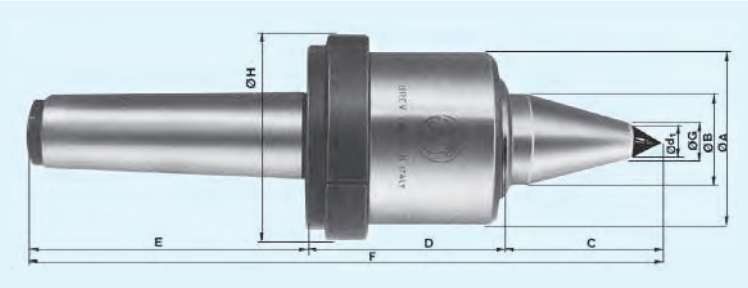

特性

它用于车削不含顶尖或含粗顶尖零件的特殊情况。延长整体轴可确保极小的工件跳动误差，而且它的细长尖端使其非常适合加工较薄的工件，甚至在靠近活顶尖时也是这样。因此该活顶尖非常适合小尺寸部件的精密加工。

FEATURES

It is used in special cases for turning parts without centers or with rough centers. The extended integral shaft ensures extremely small runout error on the workpiece and its slender point makes it ideal for machining thin workpieces. even when close to the live center. This live center is therefore ideal for precision machining of small sized components.

代码 Code	莫氏锥度 Morse Taper	尺寸 mm（英寸）/ Dimensions in mm (inch)								
		C	D	E	Ø A	Ø B	F	Ø G	Ø d1	Ø H
010185126	CM2 / *MT2*	47 (1.850)	56 (2.205)	67 (2.638)	49 (1.929)	21 (0.827)	170 (6.693)	8 (0.315)	6 (0.236)	58 (2.283)
010185136	CM3 / *MT3*	55 (2.165)	62.5 (2.461)	83 (3.268)	56.5 (2.224)	29 (1.142)	200.5 (7.894)	12 (0.472)	10 (0.394)	66 (2.598)
010185146	CM4 / *MT4*	60 (2.362)	68 (2.677)	103 (4.055)	62 (2.441)	33 (1.299)	231 (9.094)	15 (0.591)	12 (0.472)	74 (2.913)
010185156	CM5 / *MT5*	62 (2.441)	82 (3.228)	136 (5.354)	80 (3.150)	36 (1.417)	280 (11.024)	18 (0.709)	14 (0.551)	87 (3.425)
010185166	CM6 / *MT6*	90 (3.543)	123 (4.843)	189 (7.441)	119 (4.685)	57.5 (2.264)	401 (15.787)	25 (0.984)	20 (0.787)	130 (5.118)

负荷图
LOAD CHARTS

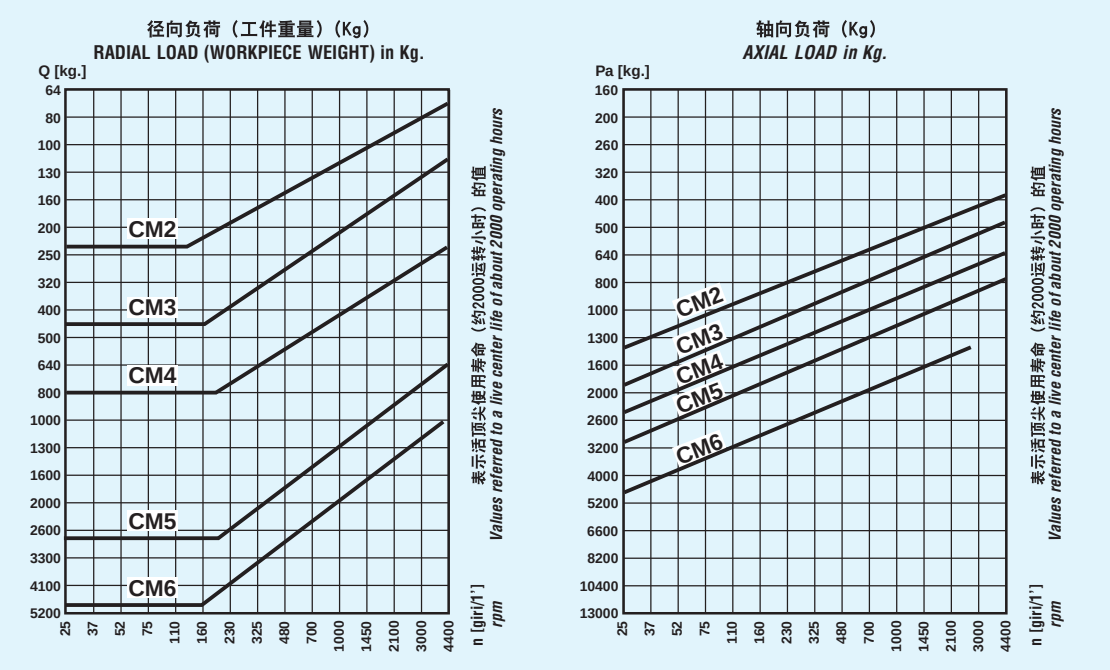

注：该负荷值指含整体轴及约 2000 运转小时活顶尖使用寿命的模型。测试显示，根据活顶尖执行加工任务的不同类型，活顶尖可用于长于或短于该运转小时的使用周期。对于其他类型的活顶尖（含可互换顶尖和延长整体轴），图中显示的负荷值应减小。这些值在第一种情况下是由于顶尖可互换性产生，而在第二种情况下则是由于整体轴延长所致。
实例：含整体轴（n= 1000 r.p.m.）的 MT4 活顶尖的允许最大负荷为：
径向负荷 Q=450 kg
轴向负荷 Pa=900 kg

Notes: *The load values refer to the model with an integral shaft ant a I'm center life of about* **2000** *operating hours. Tests have shown that the live center can however be used fora longer or shorter period than this, depending on the types of machining task it undertakes. For other types of live center (with interchangeable center and extended integral shaft) the load values indicated on the graphs should be reduced. These are a result of the center interchangeability in the first case and in the second are due to the extension of the integral shaft.*
Example: *Permitted maximum loads for the MT4 live center with integral shaft at n=* **1000** *r.p.m.*
Radial load Q = **450** *kg*
Axial load Pa = **900** *kg*

FRB 活顶尖的可互换顶尖

INTERCHANGEABLE CENTERS FOR FRB LIVE CENTERS

FR 94

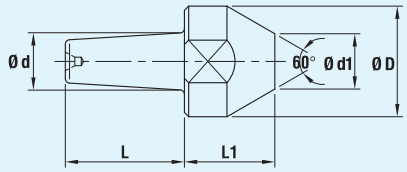

代码 Code	适于活顶尖锥度 For live center taper	尺寸 mm（英寸）/ Dimensions in mm. (inch)				
		Ø D	L1	L	Ø d	Ø d1
030315103	CM2 / *MT2*	26 (1.024)	21 (0.827)	28 (1.102)	13.5 (0.531)	13 (0.512)
030315103	CM3 / *MT3*	26 (1.024)	21 (0.827)	28 (1.102)	13.5 (0.531)	13 (0.512)
030315204	CM4 / *MT4*	29 (1.142)	22 (0.866)	29 (1.142)	15.4 (0.606)	15 (0.591)
030315305	CM5 / *MT5*	34 (1.339)	26.5 (1.043)	30 (1.181)	20.3 (0.799)	15 (0.591)
030315406	CM6 / *MT6*	43 (1.693)	27 (1.063)	40 (1.575)	28 (1.102)	23 (0.906)

FR 95

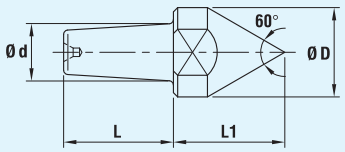

代码 Code	适于活顶尖锥度 For live center taper	尺寸 mm（英寸）/ Dimensions in mm. (inch)			
		Ø D	L1	L	Ø d
030316002	CM2 / *MT2*	21 (0.827)	26 (1.024)	28 (1.102)	13.5 (0.531)
030316103	CM3 / *MT3*	24 (0.945)	32.5 (1.280)	28 (1.102)	13.5 (0.531)
030316204	CM4 / *MT4*	29 (1.142)	35 (1.378)	29 (1.142)	15.4 (0.606)
030316305	CM5 / *MT5*	34 (1.339)	39.5 (1.555)	30 (1.181)	20.3 (0.799)
030316406	CM6 / *MT6*	43 (1.693)	47 (1.850)	40 (1.575)	28 (1.102)

FR 96

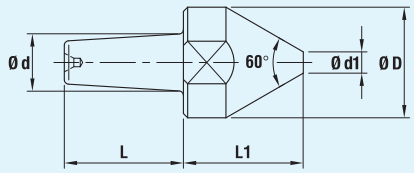

代码 Code	适于活顶尖锥度 For live center taper	尺寸 mm（英寸）/ Dimensions in mm. (inch)				
		Ø D	L1	L	Ø d	Ø d1
030317103	CM2 / *MT2*	26 (1.024)	28 (1.102)	28 (1.102)	13.5 (0.531)	5 (0.197)
030317103	CM3 / *MT3*	26 (1.024)	28 (1.102)	28 (1.102)	13.5 (0.531)	5 (0.197)
030317204	CM4 / *MT4*	29 (1.142)	30 (1.181)	29 (1.142)	15.4 (0.606)	6 (0.236)
030317305	CM5 / *MT5*	34 (1.339)	33.5 (1.319)	30 (1.181)	20.3 (0.799)	7 (0.276)
030317406	CM6 / *MT6*	43 (1.693)	36 (1.417)	40 (1.575)	28 (1.102)	13 (0.512)

FR 97 Ø 7

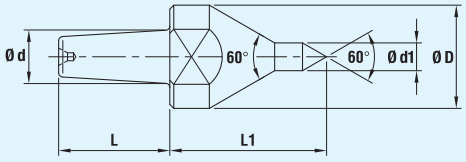

代码 Code	适于活顶尖锥度 For live center taper	尺寸 mm（英寸）/ Dimensions in mm. (inch)				
		Ø D	L1	L	Ø d	Ø d1
030318103	CM2 / *MT2*	24 (0.945)	39.5 (1.555)	28 (1.102)	13.5 (0.531)	7 (0.276)
030318103	CM3 / *MT3*	24 (0.945)	39.5 (1.555)	28 (1.102)	13.5 (0.531)	7 (0.276)
030318204	CM4 / *MT4*	24 (0.945)	42 (1.654)	29 (1.142)	15.4 (0.606)	7 (0.276)
030318305	CM5 / *MT5*	24 (0.945)	46 (1.811)	30 (1.181)	20.3 (0.799)	7 (0.276)

FR 97 Ø 15

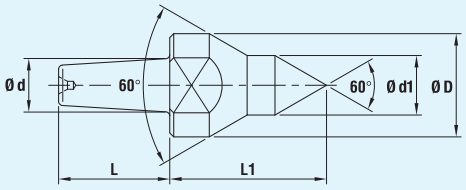

代码 Code	适于活顶尖锥度 For live center taper	尺寸 mm（英寸）/ Dimensions in mm. (inch)				
		Ø D	L1	L	Ø d	Ø d1
030318113	CM2 / *MT2*	24 (0.945)	39.5 (1.555)	28 (1.102)	13.5 (0.531)	15 (0.591)
030318113	CM3 / *MT3*	24 (0.945)	39.5 (1.555)	28 (1.102)	13.5 (0.531)	15 (0.591)
030318214	CM4 / *MT4*	24 (0.945)	42 (1.654)	29 (1.142)	15.4 (0.606)	15 (0.591)
030318315	CM5 / *MT5*	24 (0.945)	46 (1.811)	30 (1.181)	20.3 (0.799)	15 (0.591)

若有任何特殊要求，请联系我们！

CONTACT US FOR ANY SPECIAL REQUEST!

FRB 活顶尖的可互换顶尖

INTERCHANGEABLE CENTERS FOR FRB LIVE CENTERS

FR 97 Ø 13

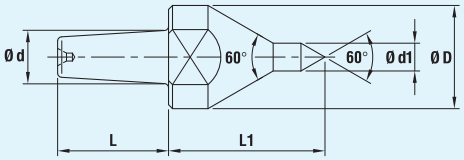

代码 *Code*	适于活顶尖锥度 *For live center taper*	尺寸 mm（英寸）/ Dimensions in mm (inch)				
		Ø D	*L1*	*L*	*Ø d*	*Ø d1*
030318406	CM6 / *MT6*	34 (1.339)	61 (2.402)	40 (1.575)	28 (1.102)	13 (0.512)

FR 97 Ø 20

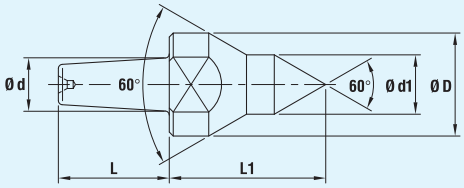

代码 *Code*	适于活顶尖锥度 *For live center taper*	尺寸 mm（英寸）/ Dimensions in mm (inch)				
		Ø D	*L1*	*L*	*Ø d*	*Ø d1*
030318416	CM6 / *MT6*	34 (1.339)	61 (2.402)	40 (1.575)	28 (1.102)	20 (0.787)

FR 98

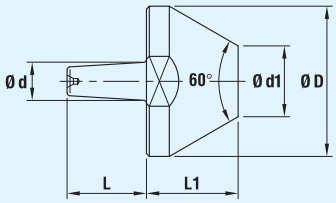

代码 *Code*	适于活顶尖锥度 *For live center taper*	尺寸 mm（英寸）/ *Dimensions in mm. (inch)*				
		Ø D	*L1*	*L*	*Ø d*	*Ø d1*
030319103	CM2 / *MT2*	53 (2.087)	32.3 (1.272)	28 (1.102)	13.5 (0.531)	25 (0.984)
030319103	CM3 / *MT3*	53 (2.087)	32.3 (1.272)	28 (1.102)	13.5 (0.531)	25 (0.984)
030319204	CM4 / *MT4*	53 (2.087)	32.3 (1.272)	29 (1.142)	15.4 (0.606)	25 (0.984)
030319305	CM5 / *MT5*	53 (2.087)	32.3 (1.272)	30 (1.181)	20.3 (0.799)	25 (0.984)
030319406	CM6 / *MT6*	73 (2.874)	35 (1.378)	40 (1.575)	28 (1.102)	42 (1.654)

FR 98-A

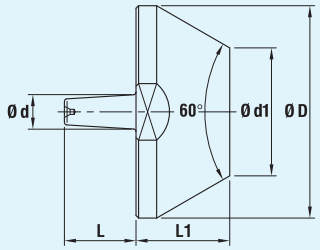

代码 *Code*	适于活顶尖锥度 *For live center taper*	尺寸 mm（英寸）/ *Dimensions in mm. (inch)*				
		Ø D	*L1*	*L*	*Ø d*	*Ø d1*
030319113	CM2 / *MT2*	83 (3.268)	36.6 (1.441)	28 (1.102)	13.5 (0.531)	50 (1.969)
030319113	CM3 / *MT3*	83 (3.268)	36.6 (1.441)	28 (1.102)	13.5 (0.531)	50 (1.969)
030319214	CM4 / *MT4*	83 (3.268)	36.6 (1.441)	29 (1.142)	15.4 (0.606)	50 (1.969)
030319315	CM5 / *MT5*	83 (3.268)	36.6 (1.441)	30 (1.181)	20.3 (0.799)	50 (1.969)
030319416	CM6 / *MT6*	103 (4.055)	36.6 (1.441)	40 (1.575)	28 (1.102)	70 (2.756)

FR 99

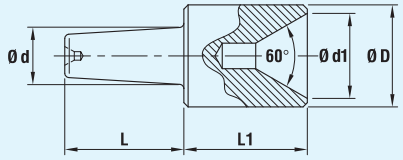

代码 *Code*	适于活顶尖锥度 *For live center taper*	尺寸 mm（英寸）/ *Dimensions in mm. (inch)*				
		Ø D	*L1*	*L*	*Ø d*	*Ø d1*
030320103	CM2 / *MT2*	24 (0.945)	29 (1.142)	28 (1.102)	13.5 (0.531)	20 (0.787)
030320103	CM3 / *MT3*	24 (0.945)	29 (1.142)	28 (1.102)	13.5 (0.531)	20 (0.787)
030320204	CM4 / *MT4*	27 (1.063)	32 (1.260)	29 (1.142)	15.4 (0.606)	22 (0.866)
030320305	CM5 / *MT5*	34 (1.339)	40 (1.575)	30 (1.181)	20.3 (0.799)	22 (0.866)
030320406	CM6 / *MT6*	48 (1.890)	46 (1.811)	40 (1.575)	28 (1.102)	40 (1.575)

若有任何特殊要求，请联系我们！

CONTACT US FOR ANY SPECIAL REQUEST!

用专用免维护油脂润滑的、承载含轴向负荷分布及可调径向圆锥滚子轴承（含支架和拔取螺母）的管道车削活顶尖的 FRB 加工头

FRB HEAD CARRYING LIVE CENTER FOR PIPE TURNING WITH AXIAL LOAD DISTRIBUTION AND ADJUSTABLE RADIAL TAPER ROLLER BEARING WITH SUPPORT AND EXTRACTION NUT, LUBRICATED WITH SPECIAL MAINTENANCE FREE GREASE

“ 80-T 系列 ” - *“80-T SERIES”*

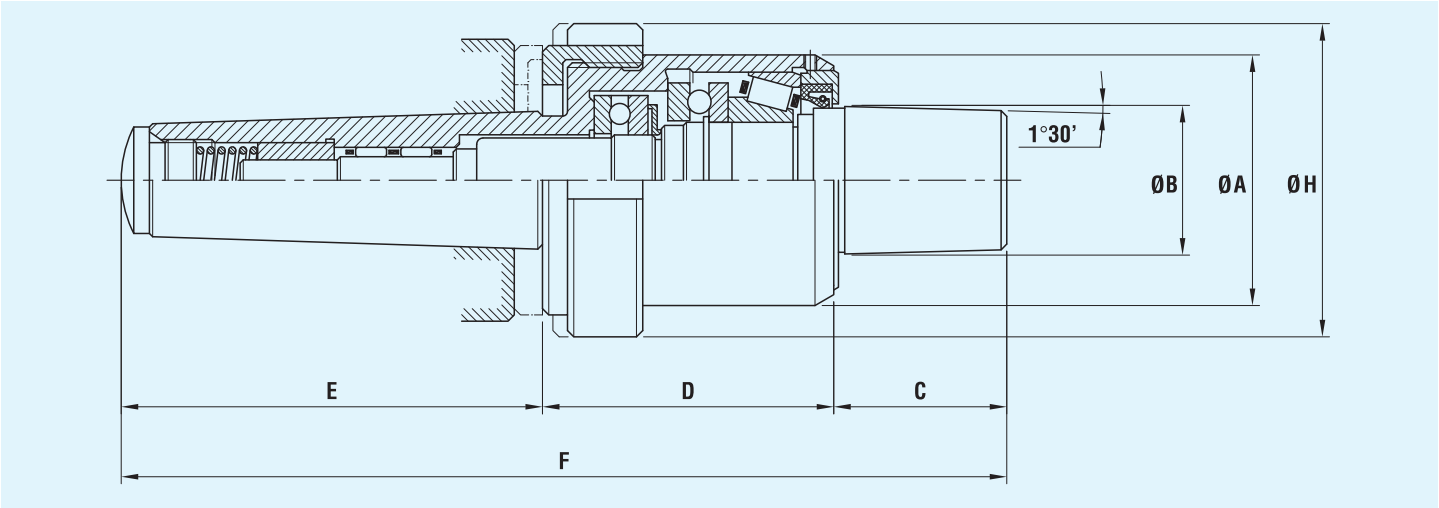

代码 Code	莫氏锥度 Morse Taper	尺寸 mm（英寸）/ Dimensions in mm (inch)						
		C	D	E	Ø A	Ø B	F	Ø H
010180127	CM2 / *MT2*	35 (1.378)	56 (2.205)	67 (2.638)	49 (1.929)	22 (0.866)	158 (6.220)	58 (2.283)
010180137	CM3 / *MT3*	42 (1.654)	62.5 (2.461)	83 (3.268)	56.5 (2.224)	29.7 (1.169)	187.5 (7.382)	66 (2.598)
010180147	CM4 / *MT4*	42 (1.654)	68 (2.677)	103 (4.055)	62 (2.441)	35 (1.378)	213 (8.386)	74 (2.913)
010180157	CM5 / *MT5*	42 (1.654)	83 (3.268)	136 (5.354)	80 (3.150)	35 (1.378)	260.5 (10.256)	88 (3.465)
010180167	CM6 / *MT6*	42.5 (1.673)	123 (4.843)	189 (7.441)	119 (4.685)	35 (1.378)	354 (13.937)	130 (5.118)

用专用免维护油脂润滑的、承载含轴向负荷分布及圆柱滚子轴承（含支架和拔取螺母）的管道车削活顶尖的 FRB 加工头

FRB HEAD CARRYING LIVE CENTER FOR PIPE TURNING WITH AXIAL LOAD DISTRIBUTION AND RADIAL CYLINDRICAL ROLLER BEARING WITH SUPPORT AND EXTRACTION NUT, LUBRICATED WITH SPECIAL MAINTENANCE FREE GREASE

“ 85-T 系列 ” - *“85-T SERIES”*

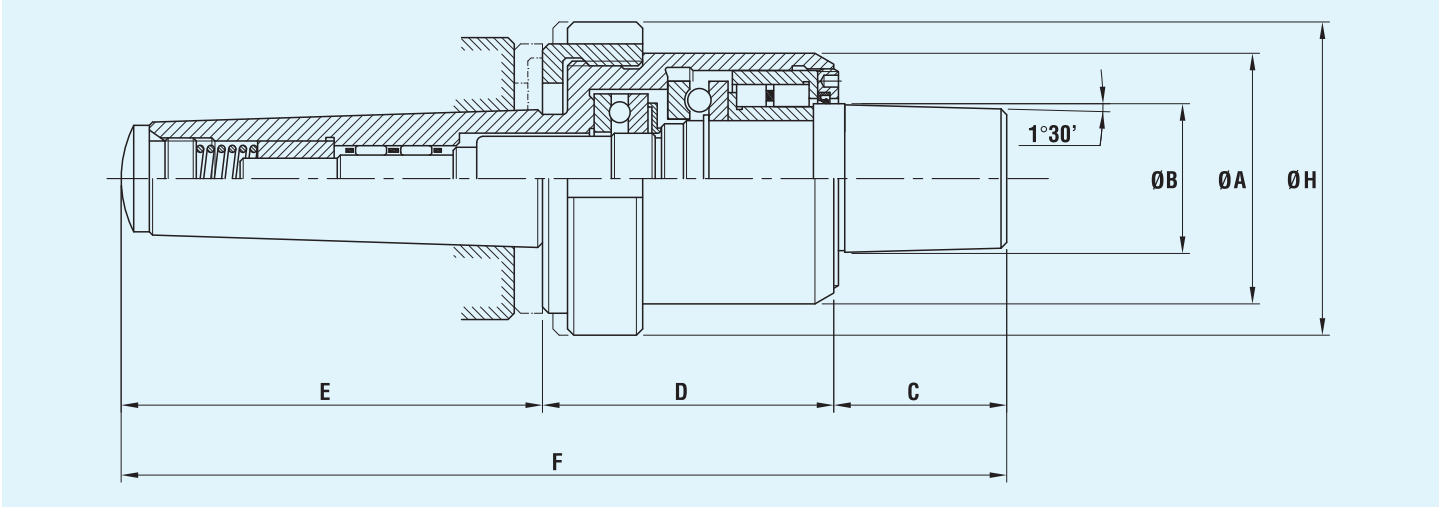

代码 Code	莫氏锥度 Morse Taper	尺寸 mm（英寸）/ Dimensions in mm (inch)						
		C	D	E	Ø A	Ø B	F	Ø H
010185127	CM2 / *MT2*	35 (1.378)	56 (2.205)	67 (2.638)	49 (1.929)	22 (0.866)	158 (6.220)	58 (2.283)
010185137	CM3 / *MT3*	42 (1.654)	62.5 (2.461)	83 (3.268)	56.5 (2.224)	29.7 (1.169)	187.5 (7.382)	66 (2.598)
010185147	CM4 / *MT4*	42 (1.654)	68 (2.677)	103 (4.055)	62 (2.441)	35 (1.378)	213 (8.386)	74 (2.913)
010185157	CM5 / *MT5*	42 (1.654)	83 (3.268)	136 (5.354)	80 (3.150)	35 (1.378)	260.5 (10.256)	88 (3.465)
010185167	CM6 / *MT6*	42.5 (1.673)	123 (4.843)	189 (7.441)	119 (4.685)	35 (1.378)	354 (13.937)	130 (5.118)

承载含管道车削拔取螺纹的固定顶尖的加工头

HEAD CARRYING DEAD CENTER WITH EXTRACTION THREAD FOR PIPE TURNING

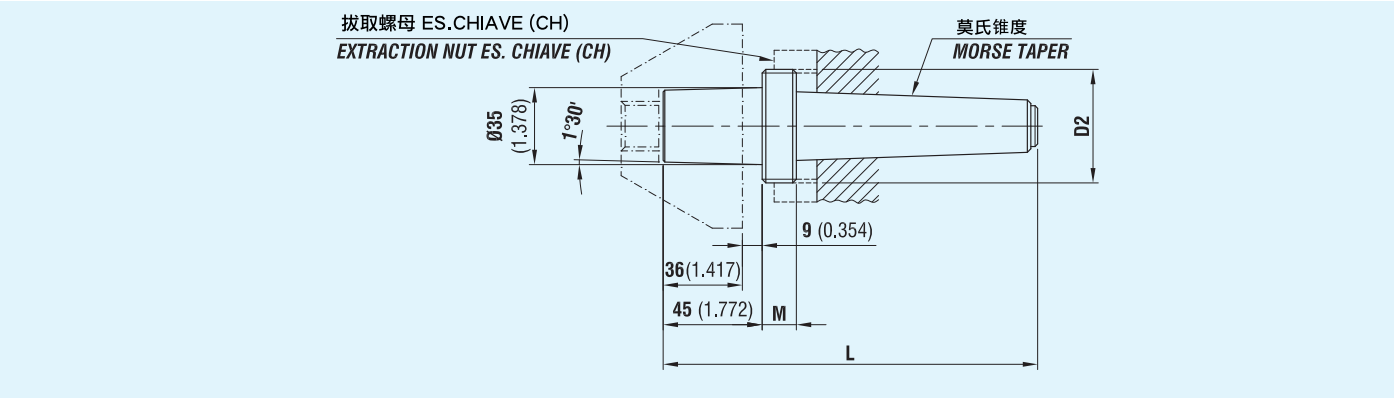

代码 Code	莫氏锥度 Morse Taper	尺寸 mm (英寸) / Dimensions in mm (inch)			
		D2	L	M	CH
123100926	CM3 / *MT3*	M48 X 1.5	145 (5.709)	14 (0.551)	60 (2.362)
123100927	CM4 / *MT4*	M48 X 1.5	170 (6.693)	16 (0.630)	60 (2.362)
123100928	CM5 / *MT5*	M48 X 1.5	201 (7.913)	16 (0.630)	60 (2.362)
123100929	CM6 / *MT6*	M69 X 2	263 (10.354)	28 (1.102)	80 (3.150)

管道车削及磨削加工头

HEADS FOR TURNING AND GRINDING OF PIPES

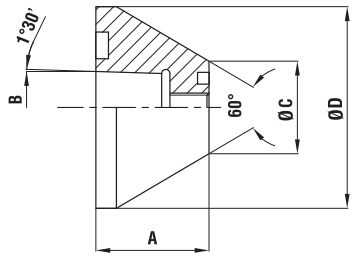

可装在：承载含轴向符合分布的活顶尖的FRB加工头和承载磨削活顶尖的FRB加工头。
可以用不同的角度制造，根据客户要求。

Can be fitted to: FRB head carrying live centers with axial load distribution and FRB head carrying live centers for grinding.
They can be manufactured with different angles on customer's request.

适于含 MT4-MT5-MT6-MT7-M80-M100 等锥度的活顶尖

FOR LIVE CENTERS WITH MT4-MT5-MT6-MT7-M80-M100 TAPERS

代码 Code	尺寸 mm (英寸) / Dimensions in mm (inch)			
	A	B	Ø C	Ø D
040400265	55 (2.165)	35 (1.378)	45 (1.772)	98 (3.858)
040400266	55 (2.165)	35 (1.378)	95 (3.740)	148 (5.827)
040400267	55 (2.165)	35 (1.378)	145 (5.709)	198 (7.795)
040400268	55 (2.165)	35 (1.378)	195 (7.677)	248 (9.764)
040400269	55 (2.165)	35 (1.378)	245 (9.646)	298 (11.732)
040400270	55 (2.165)	35 (1.378)	295 (11.614)	348 (13.701)
040400271	55 (2.165)	35 (1.378)	345 (13.583)	398 (15.669)
040400272	55 (2.165)	35 (1.378)	395 (15.551)	448 (17.638)
040400273	55 (2.165)	35 (1.378)	445 (17.520)	498 (19.606)

适于含 MT3 锥度的活顶尖

FOR LIVE CENTERS WITH MT3 TAPER

代码 Code	尺寸 mm (英寸) / Dimensions in mm (inch)			
	A	B	Ø C	Ø D
040400274	55 (2.165)	29.5 (1.161)	45 (1.772)	98 (3.858)
040400275	55 (2.165)	29.5 (1.161)	95 (3.740)	148 (5.827)
040400276	55 (2.165)	29.5 (1.161)	145 (5.709)	198 (7.795)
040400277	55 (2.165)	29.5 (1.161)	195 (7.677)	248 (9.764)

适于含 MT2 锥度的活顶尖

FOR LIVE CENTERS WITH MT2 TAPER

代码 Code	尺寸 mm (英寸) / Dimensions in mm (inch)			
	A	B	Ø C	Ø D
040400278	50 (1.969)	22 (0.866)	40 (1.575)	85 (3.346)
040400279	50 (1.969)	22 (0.866)	80 (3.150)	125 (4.921)

含轴车削拔取螺纹的特种银化钢和带硬质合金尖端的类型

DEAD CENTERS WITH EXTRACTION THREAD FOR TURNING MADE OF SPECIAL HARDENED STEEL AND VERSION WITH CARBIDE TIP

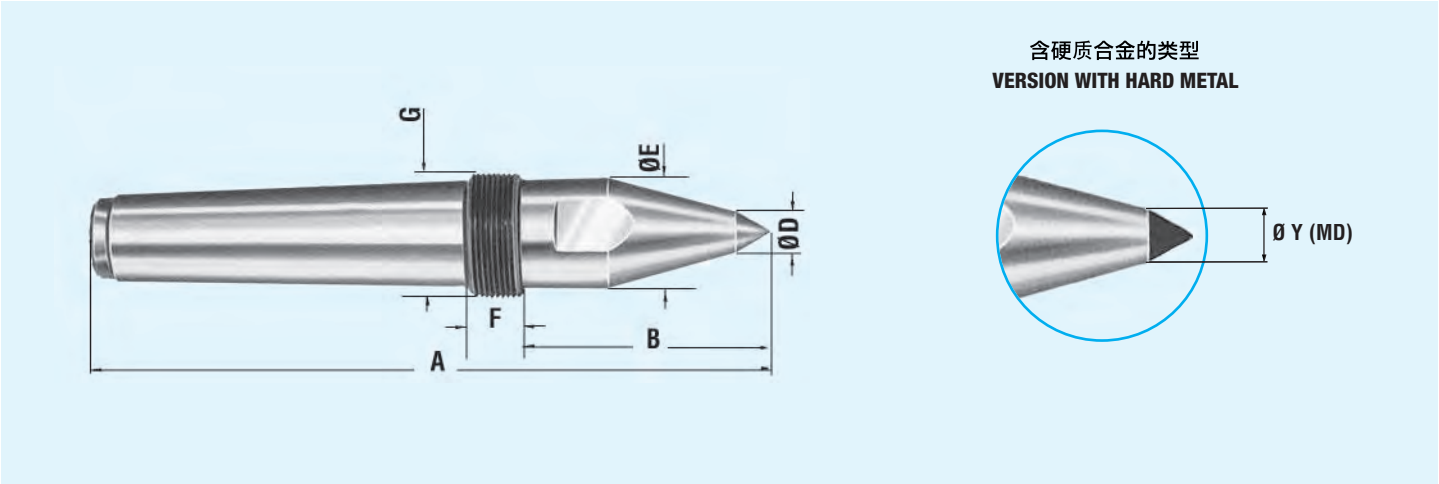

硬金属代码 *Code H.M.*	钢代码 *Code Steel*	莫氏锥度 *MorseTaper*	尺寸 mm（英寸）/ *Dimensions in mm (inch)*						*Ø Y (H.M.)*
			A	*B*	*Ø D*	*Ø E*	*F*	*G*	
124100103	121248003	CM3 / *MT3*	145 (5.709)	45 (1.772)	13 (0.512)	24 (0.945)	15 (0.591)	M36 X 1.5	12 (0.472)
124100104	121248004	CM4 / *MT4*	195 (7.677)	70 (2.756)	13 (0.512)	32 (1.260)	16 (0.630)	M36 X 1.5	14 (0.551)
124100105	121248105	CM5 / *MT5*	230 (9.055)	74 (2.913)	20 (0.787)	42 (1.654)	16 (0.630)	M48 X 1.5	16 (0.630)

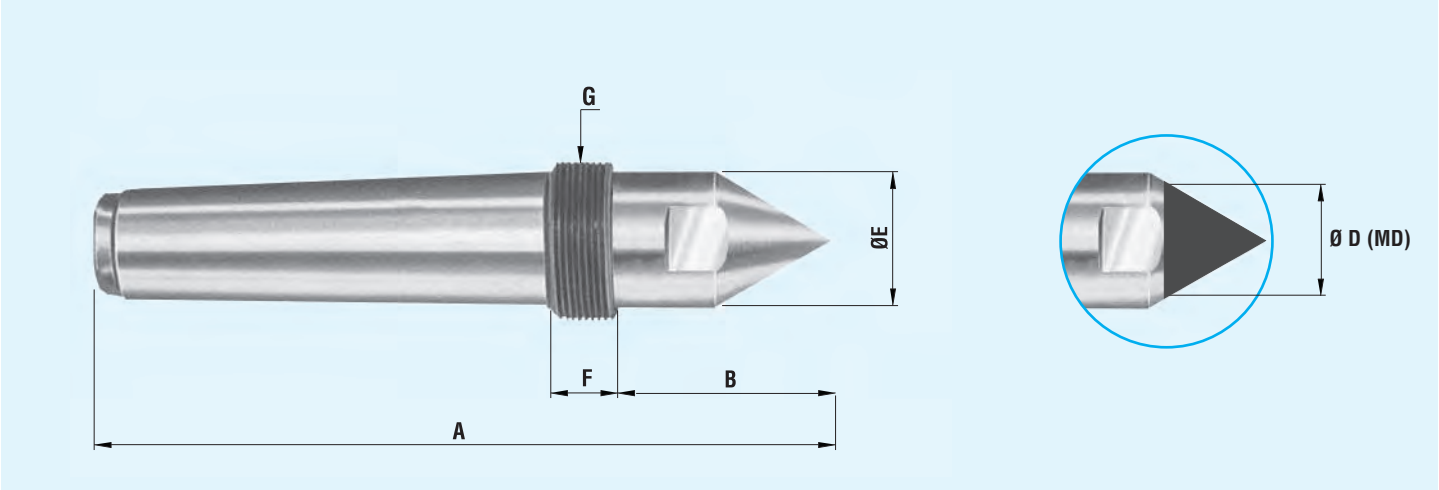

硬金属代码 *Code H.M.*	钢代码 *Code Steel*	莫氏锥度 *MorseTaper*	尺寸 mm（英寸）/ *Dimensions in mm (inch)*					*Ø D (H.M.)*
			A	*B*	*Ø E*	*F*	*G*	
124200183	124300243	CM3 / *MT3*	138 (5.433)	38 (1.496)	24 (0.945)	15 (0.591)	M36 X 1.5	18 (0.709)
124200264	124300324	CM4 / *MT4*	177 (6.969)	52 (2.047)	32 (1.260)	16 (0.630)	M36 X 1.5	26 (1.024)
124200305	124300425	CM5 / *MT5*	220 (8.661)	64 (2.519)	42 (1.654)	16 (0.630)	M48 X 1.5	30 (1.181)
	124300646	CM6 / *MT6*	294 (11.575)	70 (2.756)	64 (2.519)	30 (1.181)	M69 X 2	

承载含轴及管道车削拔取螺纹的固定顶尖的顶尖

CENTER CARRYING DEAD CENTER WITH EXTRACTION THREAD FOR SHAFT AND PIPE TURNING

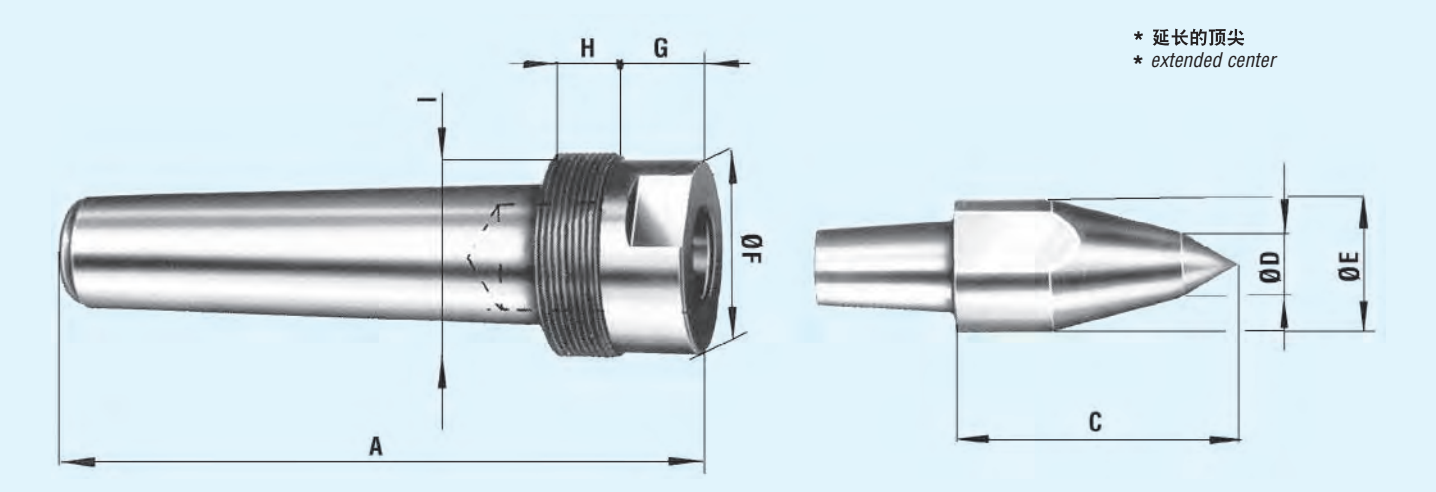

代码 Code	莫氏锥度 Morse taper	尺寸 mm（英寸）/ Dimensions in mm. (inch)							
		A	C	Ø D	Ø E	Ø F	G	H	I
122100926	CM3/MT3	110 (4.331)	-	-	-	42 (1.654)	10 (0.394)	10 (0.394)	M48 X 1.5
122100927	CM4/MT4	141 (5.551)	-	-	-	42 (1.654)	18 (0.709)	16 (0.630)	M48 X 1.5
122100928	CM5/MT5	176 (6.929)	-	-	-	42 (1.654)	18 (0.709)	16 (0.630)	M48 X 1.5
*122114005	-	-	62 (2.441)	15 (0.591)	24 (0.945)	-	-	-	-

可互换顶尖 / *INTERCHANGEABLE CENTERS*

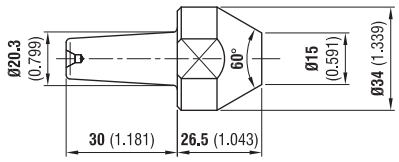

FR 94 代码 030315305

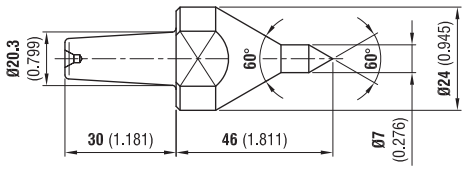

FR 97 ø 7 代码 030318305

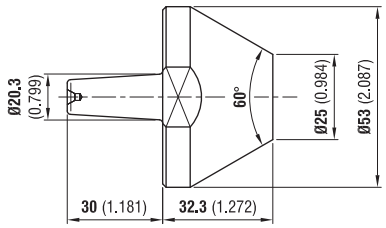

FR 98 代码 030319305

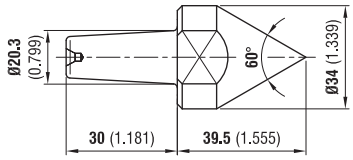

FR 95 代码 030316305

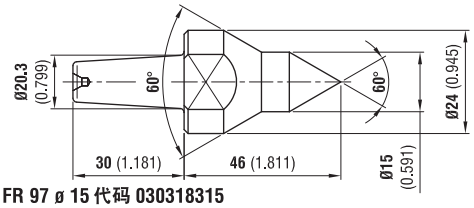

FR 97 ø 15 代码 030318315

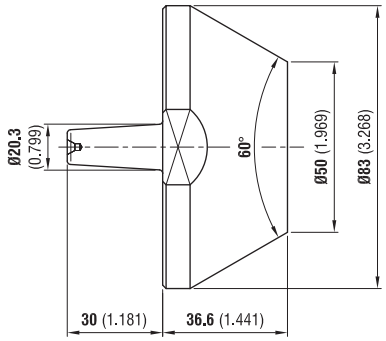

FR 98-A 代码 030319315

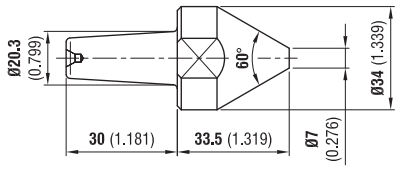

FR 96 代码 030317305

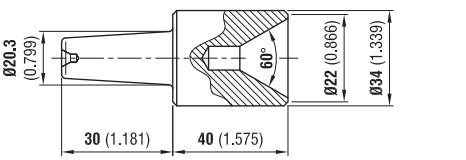

FR 99 代码 030320305

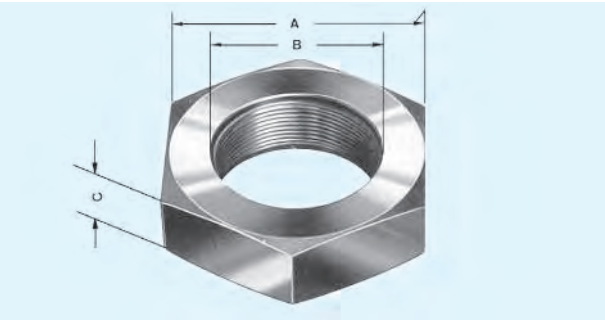

固定顶尖拔取螺母

EXTRACTION NUT FOR DEAD CENTERS

代码 Code	尺寸 mm（英寸）/ Dimensions in mm. (inch)		
	A	B	C
121249004	50 (1.969)	M36 X 1.5	20 (0.787)
121249105	60 (2.362)	M48 X 1.5	20 (0.787)
121249206	80 (3.150)	M69 X 2	28 (1.102)

同心度 /CONCENTRICITY 0.005

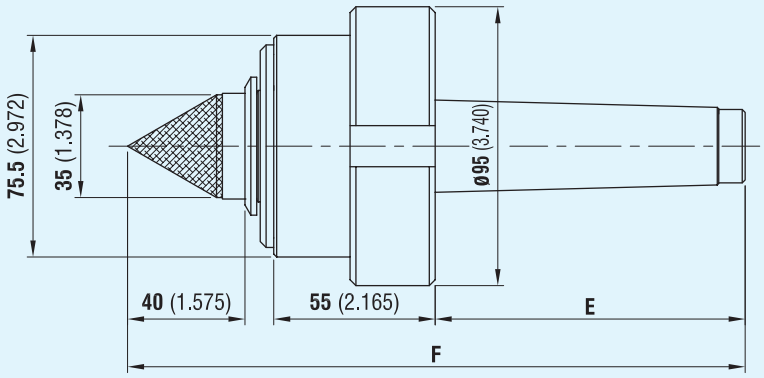

代码 *Code*	莫氏锥度 *Morse Taper*	尺寸 mm（英寸）/ Dimensions in mm (inch)			
		E		*F*	
010108145	CM4 / *MT4*	105.5	(4.154)	210.5	(8.287)
010108155	CM5 / *MT5*	132.5	(5.217)	237.5	(9.350)

同心度 /CONCENTRICITY 0.005

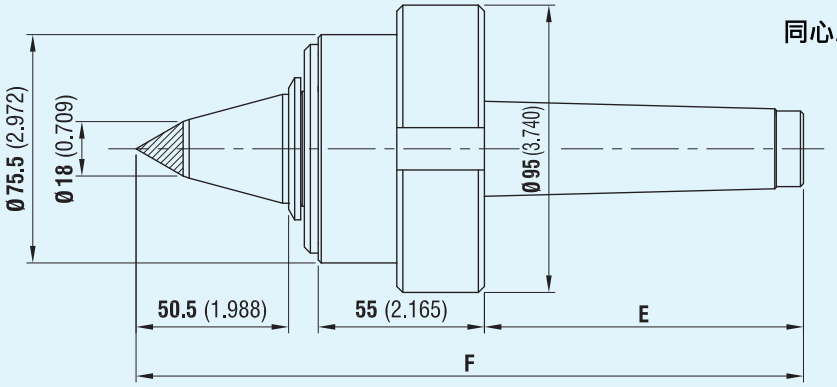

代码 *Code*	莫氏锥度 *Morse Taper*	尺寸 mm（英寸）/ Dimensions in mm (inch)			
		E		*F*	
010108146	CM4 / *MT4*	105.5	(4.154)	221	(8.701)
010108156	CM5 / *MT5*	132.5	(5.217)	248	(9.764)

径向负荷（工件重量）(Kg)
Radial Load (Workpiece weight)in Kg

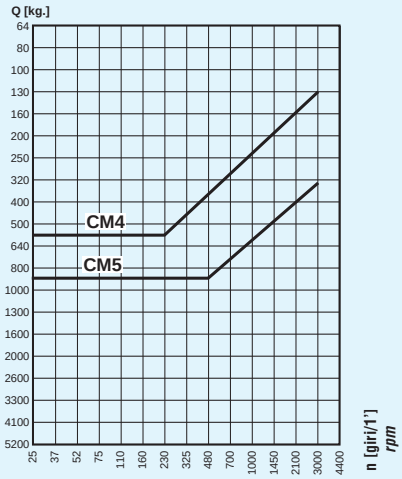

轴向负荷（Kg）
Axial Load in Kg

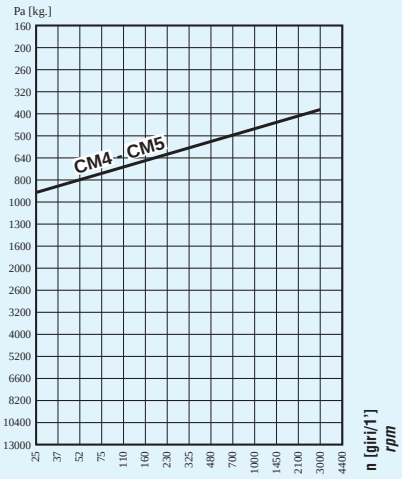

显示值。有关进一步详情，请联系我们的技术室。

INDICATIVE VALUES. For further and more detailed information, contact our technical office.

高速 FRB 活顶尖 - “2006 系列”

HIGH SPEED FRB LIVE CENTERS - “2006 SERIES”

同心度 /CONCENTRICITY 0.008

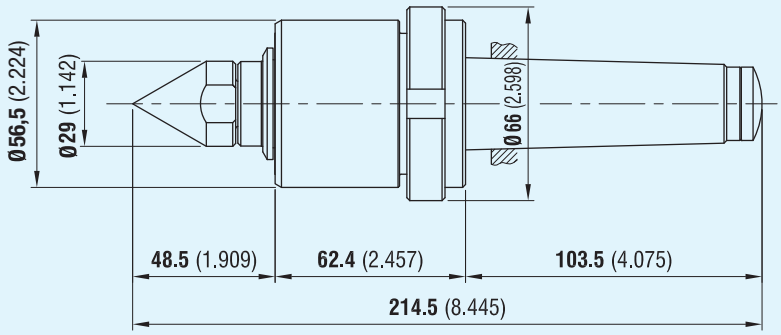

代码 *Code*	莫氏锥度 *Morse Taper*
010106142	CM4 / *MT4*
010106152	CM5 / *MT5*

可互换顶尖

INTERCHANGEABLE CENTERS

FR94	FR95	FR96	FR97 Ø7	FR97 Ø15	FR98	FR98-A	FR99
代码 / *Code*							
030315204	030316204	030317204	030318204	030318214	030319204	030319214	030320204

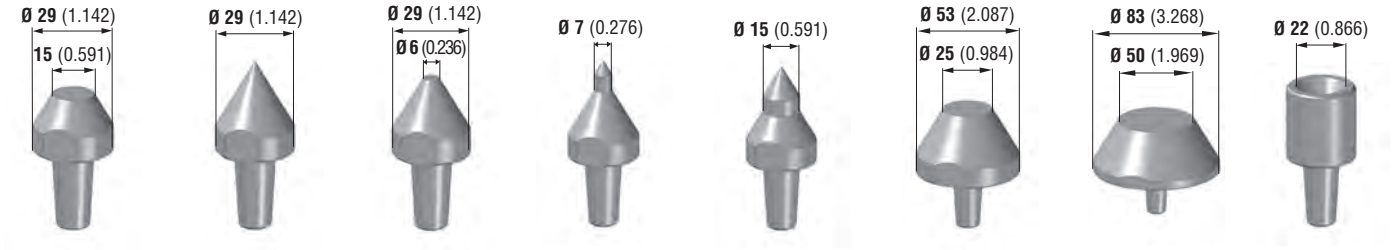

径向负荷（工件重量）(Kg)

Radial Load (Workpiece weight) in Kg

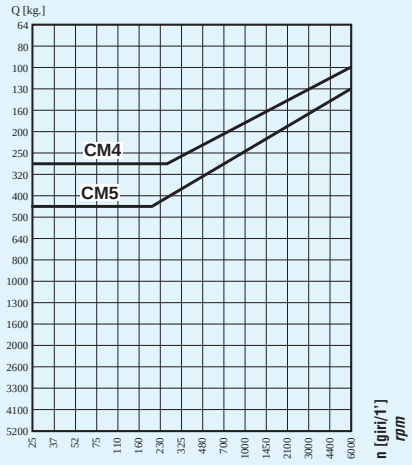

轴向负荷（Kg）

Axial Load in Kg

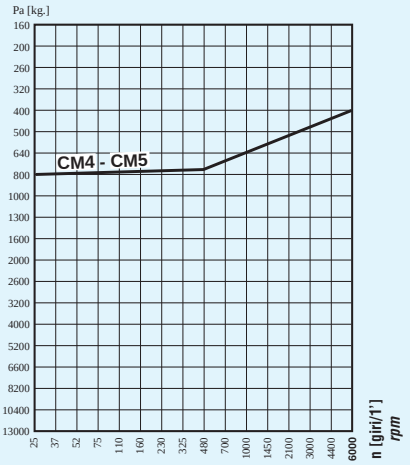

显示值。有关进一步详情，请联系我们的技术室。

INDICATIVE VALUES. For further and more detailed information, contact our technical office.

自动车床弹性活顶尖 - “81 增强型系列”

SPRUNG LIVE CENTERS FOR AUTHOMATIC LATHES - “81 REINFORCED SERIES”

同心度 /CONCENTRICITY 0.010

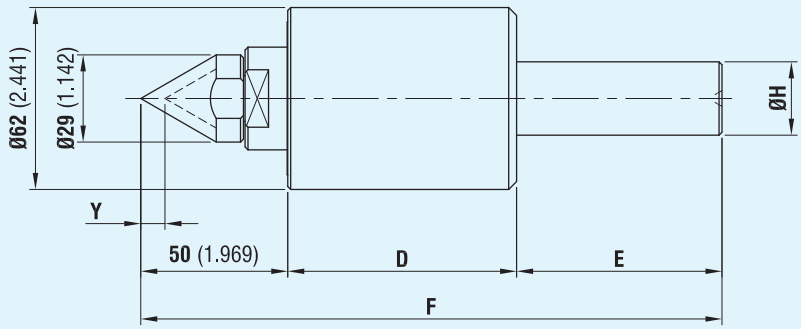

Y=

冲程 / *Stroke* mm(inch)	负荷 / *Load* KG (lb)
1.5 (0.059)	200 (440.92)
3 (0.118)	400 (881.83)
4.5 (0.177)	600 (1322.75)

代码 *Code*	柄 *Shank*	尺寸 mm（英寸）/ *Dimensions in mm (inch)*			
		D	*E*	*F*	*Ø H*
010180625	圆柱 /Cylindrical	75 (2.953)	65 (2.559)	190 (7.480)	25 (0.984)
010180632	圆柱 /Cylindrical	75 (2.953)	65 (2.559)	190 (7.480)	32 (1.260)

同心度 /CONCENTRICITY 0.010

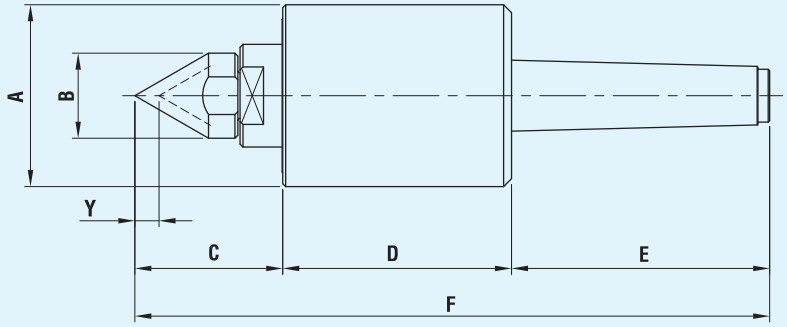

Y=

冲程 / *Stroke* mm (inch)	负荷 / *Load* KG (lb)
1.5 (0.059)	200 (440.92)
3 (0.118)	400 (881.83)
4.5 (0.177)	600 (1322.75)

代码 *Code*	莫氏锥度 *Morse Taper*	尺寸 mm（英寸）/ *Dimensions in mm (inch)*					
		A	*B*	*C*	*D*	*E*	*F*
010181204	CM3 / *MT3*	62 (2.441)	29 (1.142)	50 (1.969)	78 (3.071)	88 (3.465)	216 (8.504)

可互换顶尖

INTERCHANGEABLE CENTERS

FR94	FR95	FR96	FR97 Ø7	FR97 Ø15	FR98	FR98-A	FR99
代码 / *Code*							
030315204	030316204	030317204	030318204	030318214	030319204	030319214	030320204

弹性活顶尖“81 系列”

SPRUNG LIVE CENTER “81 SERIES”

同心度 /CONCENTRICITY 0.010

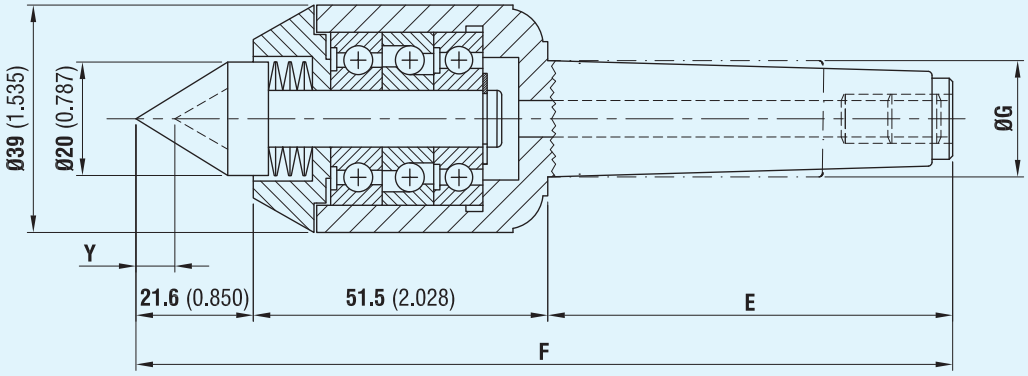

Y=

冲程 / *Stroke*	负荷 / *Load*
mm (inch)	KG (lb)
3 (0.118)	90 (198.41)

代码 *Code*	柄 *Shank*	尺寸 mm (英寸)/ Dimensions in mm (inch)					
		E		*F*		*Ø G*	
010180715	圆柱 / *Cylindrical*	50	(1.969)	123.1	(4.846)	15 h7	(0.591)
010180819	圆柱 / *Cylindrical*	50	(1.969)	123.1	(4.846)	19.05 h7	(0.750)
010180925	圆柱 / *Cylindrical*	50	(1.969)	123.1	(4.846)	25.4 h7	(1.000)
010181001	锥度 1 / *Taper 1*	60	(2.362)	133.1	(5.240)	12.2	(0.480)
010181102	锥度 2 / *Taper 2*	71	(2.795)	144.1	(5.673)	18	(0.709)
010181203	锥度 3 / *Taper 3*	88	(3.465)	161.1	(6.343)	24.1	(0.949)
010181304	锥度 4 / *Taper 4*	110	(4.331)	183.1	(7.209)	31.6	(1.244)

车削 FRB 活顶尖 - “2000 系列”- ECOLINE

FRB LIVE CENTERS FOR TURING - “2000 SERIES” - ECOLINE

同心度 /CONCENTRICITY 0.010

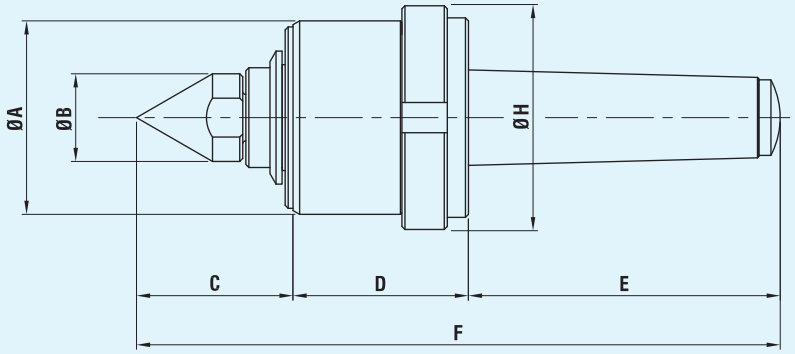

代码 *Code*	莫氏锥度 *Morse Taper*	尺寸 mm (英寸)/ Dimensions in mm (inch)						
		Ø A	*Ø B*	*C*	*D*	*E*	*F*	*Ø H*
010100103	CM3 / *MT3*	56 (2.205)	24 (0.945)	47 (1.850)	53 (2.087)	85.5 (3.366)	185.5 (7.303)	66 (2.598)
010100104	CM4 / *MT4*	64 (2.520)	29 (1.142)	52 (2.047)	58 (2.283)	103 (4.055)	213 (8.386)	74 (2.913)
010100105	CM5 / *MT5*	78 (3.071)	34 (1.339)	58 (2.283)	64.5 (2.539)	136 (5.354)	258.5 (10.177)	87 (3.425)

可互换顶尖

INTERCHANGEABLE CENTERS

有关尺寸特性，请参见第 12-13 页

FOR THE DIMENSIONAL FEATURES SEE PAGES 12-13

	FR94	FR95	FR96	FR97 Ø7	FR97 Ø15	FR98	FR98-A	FR99
	代码 / *Code*							
CM3 / *MT3*	030315103	030316103	030317103	030318103	030318113	030319103	030319113	030320103
CM4 / *MT4*	030315204	030316204	030317204	030318204	030318214	030319204	030319214	030320204
CM5 / *MT5*	030315305	030316305	030317305	030318305	030318315	030319305	030319315	030320305

径向负荷（工件重量）(Kg)
Radial Load (Workpiece weight)in Kg

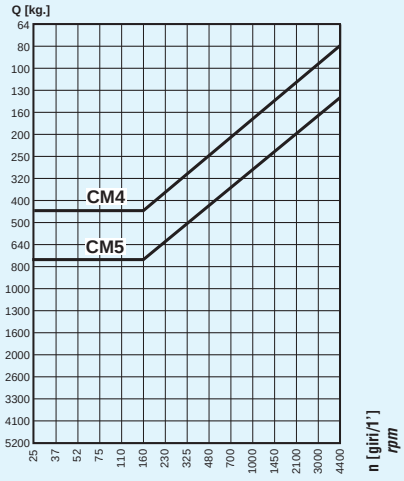

轴向负荷（Kg）
Axial Load in Kg

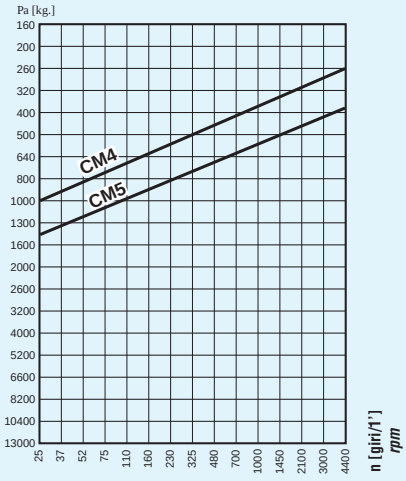

显示值。有关进一步详情，请联系我们的技术室。

INDICATIVE VALUES. For further and more detailed information, contact our technical office.

含延长整体轴的车削 FRB 活顶尖 - “2000 系列”- ECOLINE

FRB LIVE CENTERS FOR TURNING WITH EXTENDED INTEGRAL SHAFT - “2000 SERIES” - ECOLINE

同心度 /CONCENTRICITY 0.005

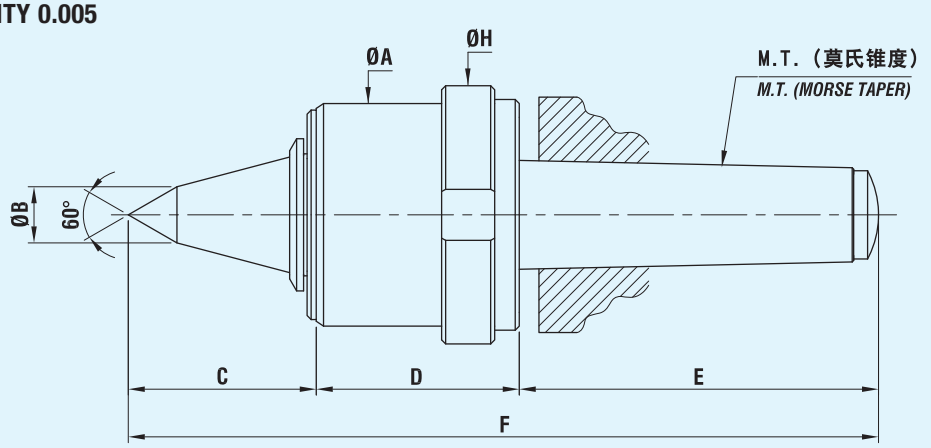

代码 Code	莫氏锥度 Morse Taper	尺寸 mm（英寸） / Dimensions in mm (inch)						
		Ø A	Ø B	C	D	E	F	Ø H
010100113	CM3 / *MT3*	56 (2.205)	14 (0.551)	47 (1.850)	53 (2.087)	85.5 (3.366)	185.5 (7.303)	66 (2.598)
010100114	CM4 / *MT4*	64 (2.520)	16 (0.630)	53 (2.087)	58 (2.283)	103 (4.055)	214 (8.429)	74 (2.913)
010100115	CM5 / *MT5*	78 (3.071)	16 (0.630)	66 (2.598)	64.5 (2.539)	136 (5.354)	266.5 (10.492)	87 (3.425)

含整体轴的车削FRB活顶尖 - 2000系列” - ECOLINE

FRB LIVE CENTERS FOR TURNING WITH INTEGRAL SHAFT - “2000 SERIES” - ECOLINE

同心度 /CONCENTRICITY 0.005

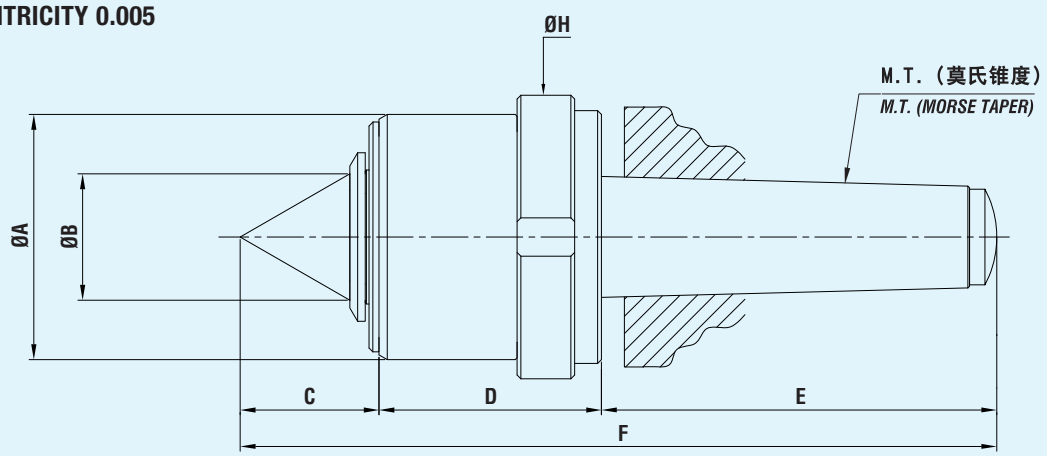

代码 Code	莫氏锥度 Morse Taper	尺寸 mm（英寸） / Dimensions in mm (inch)						
		Ø A	Ø B	C	D	E	F	Ø H
010100123	CM3 / *MT3*	56 (2.205)	29 (1.142)	32 (1.260)	53 (2.087)	85.5 (3.366)	171 (6.732)	66 (2.598)
010100124	CM4 / *MT4*	64 (2.520)	33 (1.299)	36 (1.417)	58 (2.283)	103 (4.055)	197 (7.760)	74 (2.913)
010100125	CM5 / *MT5*	78 (3.071)	36 (1.417)	47 (1.850)	64.5 (2.539)	136 (5.354)	247 (9.724)	87 (3.425)

油脂润滑活顶尖的维护说明

每隔150个运转小时后，使用润滑脂 （GREASE MOLYKOTE BR 2 PLUS）倒进适合拟合。

INSTRUCTIONS FOR MAINTENANCE OF GREASE LUBRICATED LIVE CENTERS

Every 150 working hours lubricate with GREASE MOLYKOTE BR 2 PLUS through the suitable grease fitting.

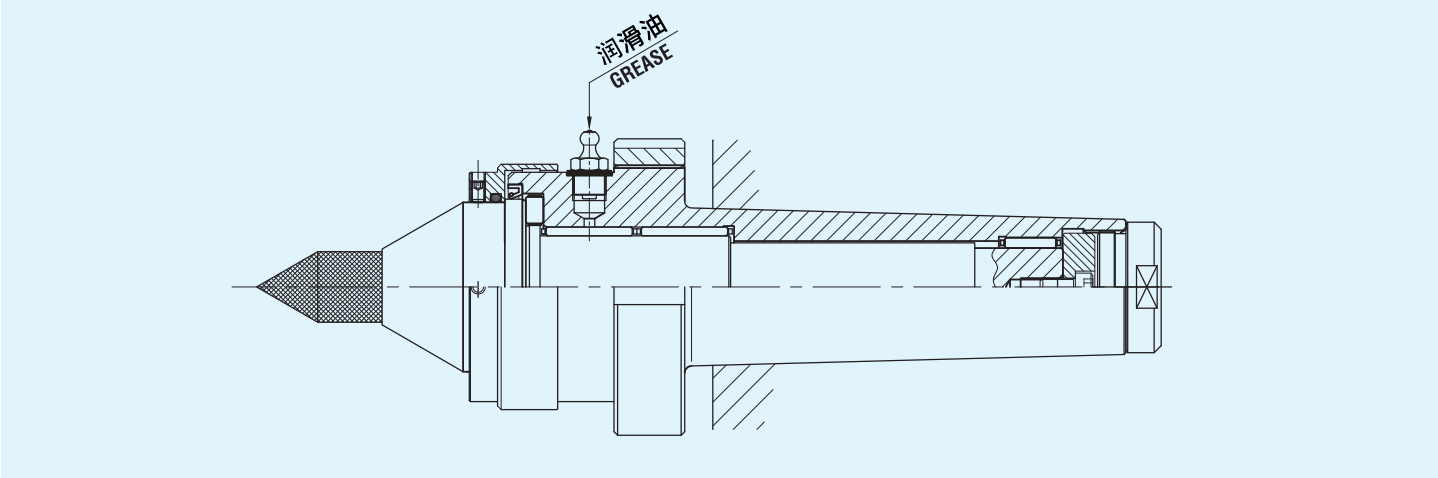

油雾润滑系统

OIL MIST LUBRICATION SYSTEM

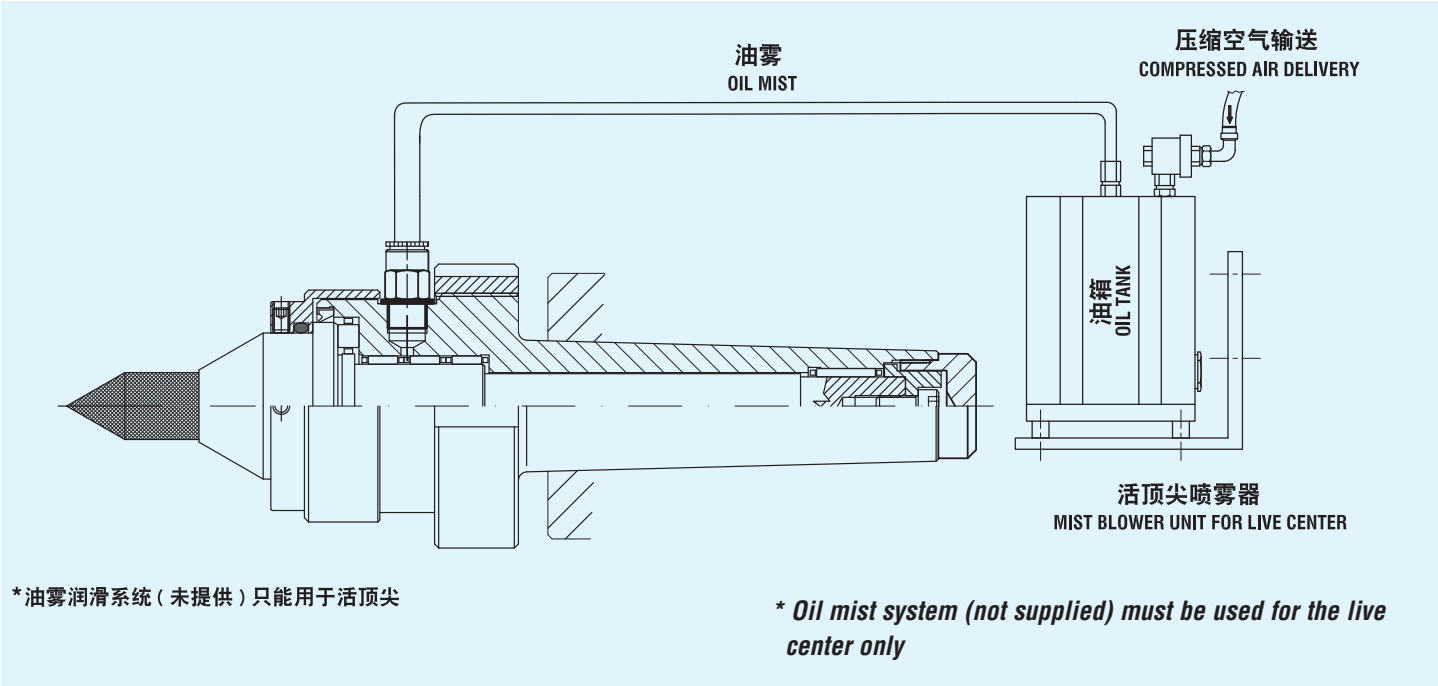

***油雾润滑系统（未提供）只能用于活顶尖**

**** Oil mist system (not supplied) must be used for the live center only***

油雾润滑系统：

类型 1°：消耗全部传输油的固定装置。
压力：1.5 ÷ 2 bar
每分钟油滴：2 ÷ 3
类型 2°：消耗 10% 传输油并循环 90% 传输油的固定装置。
压力：3 ÷ 4 bar
每分钟油滴：20 ÷ 30
（油雾润滑系统只能用于活顶尖）建议用油：美孚中级循环油粘度：ISO 46 或轻级循环油 ISO 32

Oil mist lubrication systems:

1° type: Fixture with total consumption of the delivery drop.
Pressure: 1.5 ÷ 2 bar
Drops of oil per minute: 2 ÷ 3
2° type: Fixture with a 10% consumption of the delivery drop and recovery of 90% of the drop.
Pressure: 3 ÷ 4 bar
Drops of oil per minute: 20 ÷ 30
(Oil mist system must be used for the live center only)
Recommended oil: Mobil DTE Oil Medium viscosity: ISO 46 or DTE Light ISO 32

磨削活顶尖“92 系列”

LIVE CENTERS FOR GRINDING “92 SERIES”

公差 / *with tolerances:* 圆度 / ***roundness < 0.0015*** 偏心率 / ***eccentricity < 0.0025***

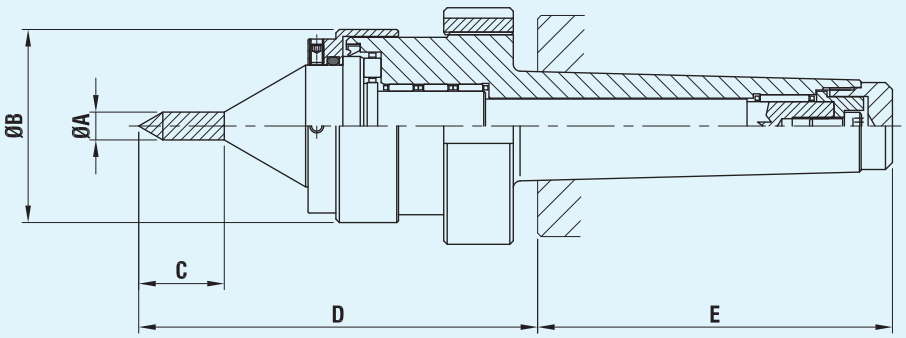

油脂润滑系统 - 代码 *Grease lubrication system - code*	油雾润滑系统 - 代码 *Oil mist lubrication system - code*	莫氏锥度 *Morse Taper*	尺寸 mm（英寸）/ *Dimensions in mm. (inch)*									
			Ø A		*Ø B*		*C*		*D*		*E*	
010921101	010921113	CM3/*MT3*	8	(0.315)	51	(2.008)	24.7	(0.972)	100	(3.937)	81.7	(3.217)
010921102	010921114	CM4/*MT4*	8	(0.315)	55.5	(2.185)	24.5	(0.965)	115	(4.528)	102	(4.016)
010921103	010921115	CM5/*MT5*	12	(0.472)	69.5	(2.736)	28.5	(1.122)	129	(5.079)	127	(5.000)

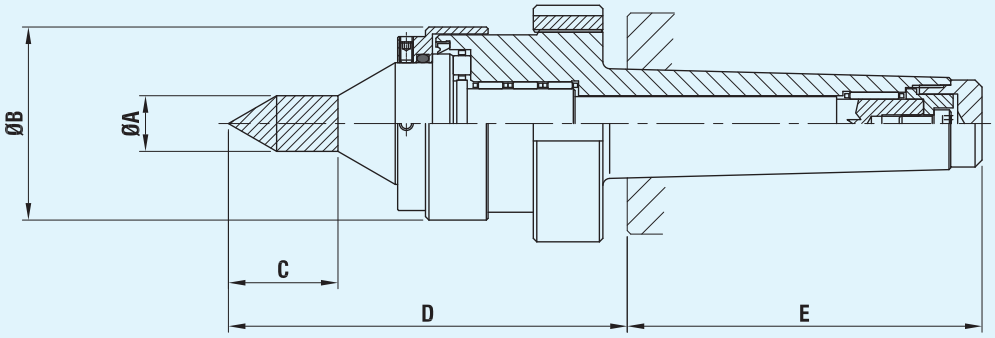

油脂润滑系统 - 代码 *Grease lubrication system - code*	油雾润滑系统 - 代码 *Oil mist lubrication system - code*	莫氏锥度 *Morse Taper*	尺寸 mm（英寸）/ *Dimensions in mm. (inch)*									
			Ø A		*Ø B*		*C*		*D*		*E*	
010922101	010921123	CM3/*MT3*	16	(0.630)	51	(2.008)	31.5	(1.240)	100	(3.937)	81.7	(3.217)
010922102	010921124	CM4/*MT4*	16	(0.630)	55.5	(2.185)	31.5	(1.240)	115	(4.528)	102	(4.016)
010922103	010921125	CM5/*MT5*	20	(0.787)	69.5	(2.736)	35	(1.378)	129	(5.079)	127	(5.000)

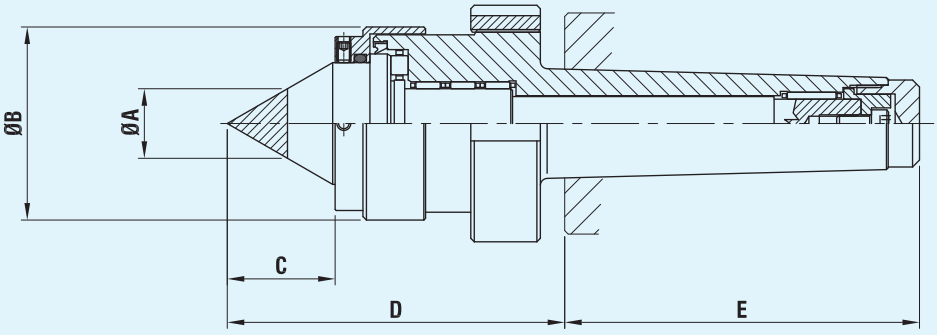

油脂润滑系统 - 代码 *Grease lubrication system - code*	油雾润滑系统 - 代码 *Oil mist lubrication system - code*	莫氏锥度 *Morse Taper*	尺寸 mm（英寸）/ *Dimensions in mm. (inch)*									
			Ø A (MD)		*Ø B*		*C*		*D*		*E*	
010923101	010921133	CM3/*MT3*	16	(0.630)	51	(2.008)	24.2	(0.953)	83	(3.268)	81.7	(3.217)
010923102	010921134	CM4/*MT4*	20	(0.787)	55.5	(2.185)	31	(1.220)	97	(3.819)	102	(4.016)
010923103	010921135	CM5/*MT5*	26	(1.024)	69.5	(2.736)	42.5	(1.673)	111	(4.370)	127	(5.000)

承载磨削活顶尖的顶尖“92 系列”

CENTER CARRYING LIVE CENTERS FOR GRINDING “92 SERIES”

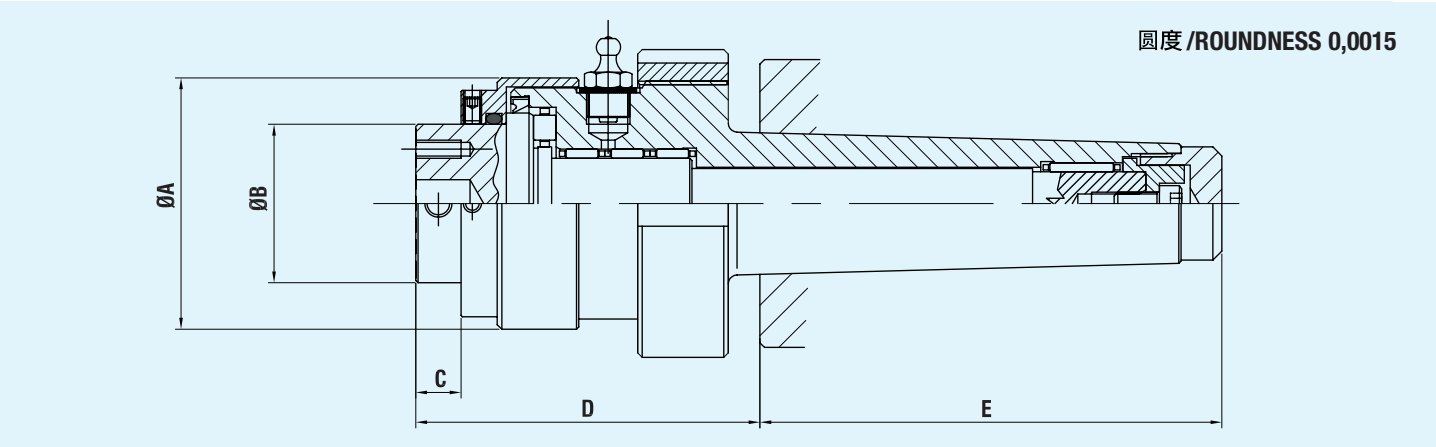

油脂润滑系统 - 代码 *Grease lubrication system - code*	油雾润滑系统 - 代码 *Oil mist lubrication system - code*	莫氏锥度 *Morse Taper*	尺寸 mm (英寸) / *Dimensions in mm. (inch)*									
			Ø A		*Ø B*		*C*		*D*		*E*	
010925101	010921153	CM3/*MT3*	49	(1.929)	32	(1.260)	10	(0.394)	68.5	(2.697)	81.7	(3.217)
010925102	010921154	CM4/*MT4*	55.5	(2.185)	35	(1.378)	10	(0.394)	76	(2.992)	102	(4.016)
010925103	010921155	CM5/*MT5*	65	(2.559)	48	(1.890)	10	(0.394)	79	(3.110)	127	(5.000)

与承载活顶尖 MT3 和 MT4 的顶尖配套的顶尖

CENTERS FOR CENTER CARRYING LIVE CENTER MT3 AND MT4

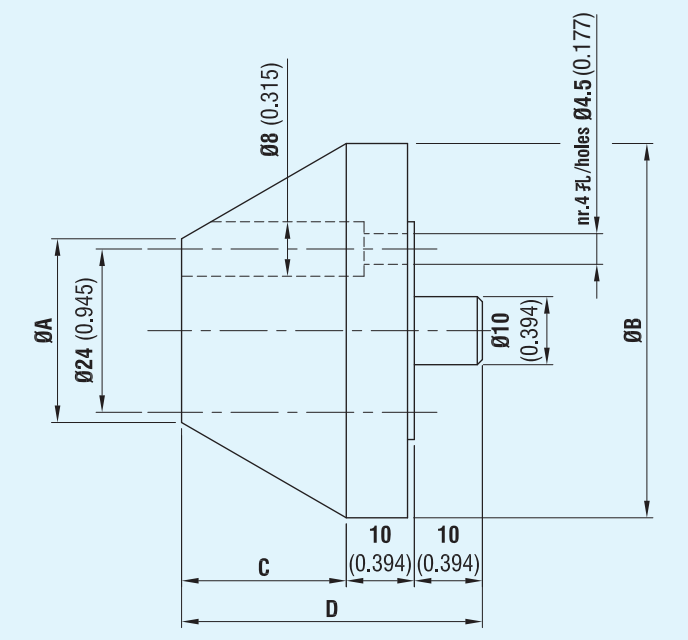

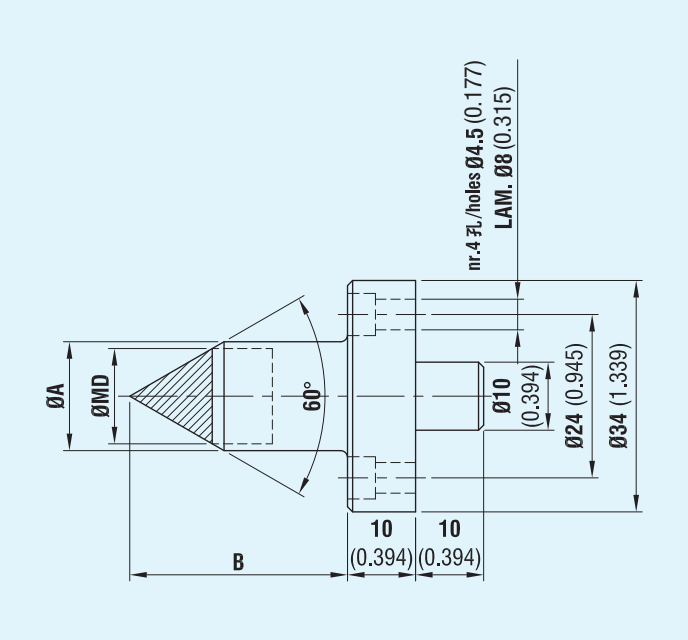

代码 *Code*	尺寸 mm (英寸) / *Dimensions in mm. (inch)*							
	Ø A		*Ø B*		*C*		*D*	
030392005	7	(0.276)	34	(1.339)	23.4	(0.921)	43.4	(1.709)
030392006	27	(1.063)	55	(2.165)	24.2	(0.953)	44.2	(1.740)
030392007	40	(1.575)	68	(2.677)	24.2	(0.953)	44.2	(1.740)
030392008	60	(2.362)	88	(3.465)	24.2	(0.953)	44.2	(1.740)

代码 *Code*	尺寸 mm (英寸) / *Dimensions in mm. (inch)*					
	Ø A		*Ø MD*		*B*	
030392001	8	(0.315)	6	(0.236)	25	(0.984)
030392002	10	(0.394)	8	(0.315)	27	(1.063)
030392003	12	(0.472)	10	(0.394)	29	(1.142)
030392004	16	(0.630)	14	(0.551)	32	(1.260)

与活顶尖 MT5 配套的顶尖
按需提供

CENTERS FOR LIVE CENTERS MT5
AVAILABLE ON REQUEST

承载管道磨削活顶尖的加工头“92 系列”

HEAD CARRYING LIVE CENTER FOR GRINDING OF PIPES “92 SERIES”

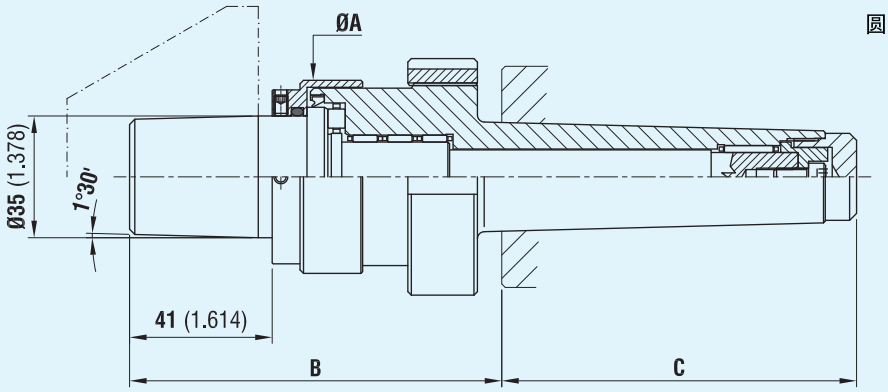

油脂润滑系统 - 代码 *Grease lubrication system - code*	油雾润滑系统 - 代码 *Oil mist lubrication system - code*	莫氏锥度 *Morse Taper*	尺寸 mm (英寸) / *Dimensions in mm. (inch)*					
			Ø A		*B*		*C*	
010924102	010921144	CM4/*MT4*	55.5	(2.185)	107	(4.213)	102	(4.016)
010924103	010921145	CM5/*MT5*	69.5	(2.736)	111	(4.370)	127	(5.000)

管道磨削加工头

HEADS FOR GRINDING OF PIPES

代码 - *Code*	尺寸 mm (英寸) / Dimensions in mm. (inch)			
	Ø C		*Ø D*	
040400265	45	(1.772)	98	(3.858)
040400266	95	(3.740)	148	(5.827)
040400267	145	(5.709)	198	(7.795)
040400268	195	(7.677)	248	(9.764)
040400269	245	(9.646)	298	(11.732)
040400270	295	(11.614)	348	(13.701)
040400271	345	(13.583)	398	(15.669)
040400272	395	(15.551)	448	(17.638)
040400273	445	(17.520)	498	(19.606)

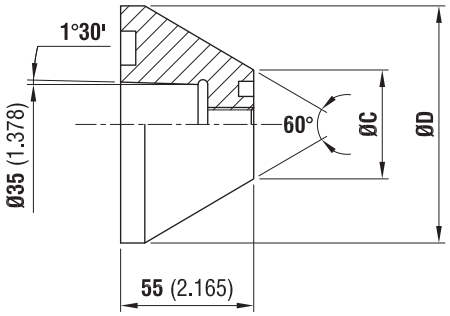

含三种接触扇形片的加工头

HEADS WITH THREE CONTACT SECTORS

代码 - *Code*	尺寸 mm (英寸) / Dimensions in mm. (inch)					
	Ø A		*Ø B*		*C*	
040300265	45	(1.772)	98	(3.858)	20	(0.787)
040300266	95	(3.740)	148	(5.827)	30	(1.181)
040300267	145	(5.709)	198	(7.795)	40	(1.575)
040300268	195	(7.677)	248	(9.764)	50	(1.969)
040300269	245	(9.646)	298	(11.732)	60	(2.362)

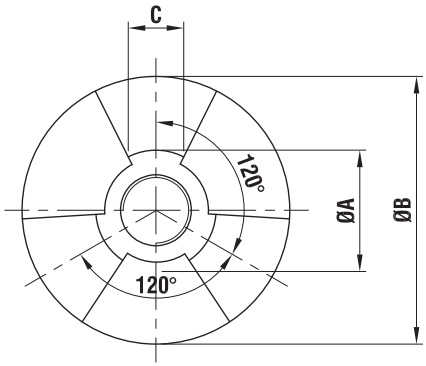

齿轮切削机 FRB 活顶尖“82 系列”

FRB LIVE CENTER FOR GEAR CUTTING MACHINE “82 SERIES”

技术特性：

针对齿轮切削机的特殊加工特性，设计了“82 系列”活顶尖。滚刀的中断切削要求活顶尖极具刚性（这就是它配有滚针轴承的原因），而且它的旋转速度不能太高。
这些活顶尖的一个更为重要的特性是其本体尺寸减小了，以便滚刀从齿轮进出。为增加活顶尖的刚度，其轴由工具钢制成并经穿透淬火。

维护：
拆下螺钉 ①，取出轴。
然后修理轴或用其中一个可互换轴更换轴。

如果活顶尖标准不适用那些需要的活顶尖，请用需要的尺寸完成下图。所有活顶尖均经油脂润滑。

TECHNICAL FEATURES:

“82 Serie” live centers have been designed considering the specific machining features of the gear cutting machines. Interrupted cut of hobs requires the live center is extremely rigid (that is why it has been assembled with needle bearings) and it has not to reach high rotational speed.
One more important feature of these live centers is the reduced dimensions of their body in order to let the hob gets in and out from the gear. To inchrease rigidity of the live center, its shaft is manufactured of tool steel and throught hardened.

Maintenance:
Remove the screw ① and extract the shaft.
Then the shaft can be repaired or replaced by one of the interchangeable shafts.

If live centes standard are not those ones required, please complete the drawing below with needed dimensions.
All live centers are grease lubricated.

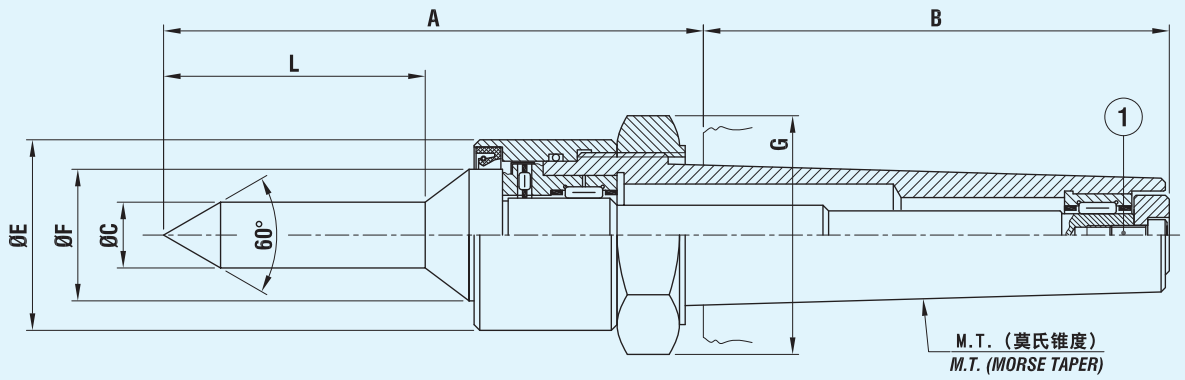

莫氏锥度 *Morse Taper*	尺寸 mm（英寸）/ Dimensions in mm (inch)									
	A	*B*			*Ø E*		*Ø F*		*G*	
CM3 / *MT3*		84.2	(3.315)		42	(1.654)	29	(1.142)	46	(1.811)
CM4 / *MT4*		102.7	(4.043)		42	(1.654)	29	(1.142)	46	(1.811)
CM5 / *MT5*		129.5	(5.098)		62	(2.441)	45	(1.772)	68	(2.677)

同心度 /CONCENTRICITY 0.005

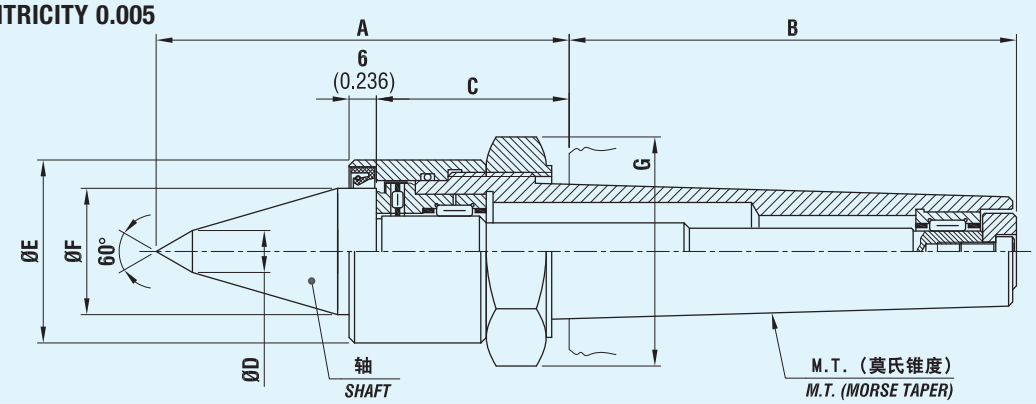

代码 *Code*	莫氏锥度 *Morse Taper*	尺寸 mm（英寸）/ Dimensions in mm (inch)						
		A	*B*	*C*	*Ø D*	*Ø E*	*Ø F*	*G*
010182036	CM3 / *MT3*	93 (3.661)	84.2 (3.315)	43 (1.693)	12 (0.472)	42 (1.654)	29 (1.142)	46 (1.811)
010182046	CM4 / *MT4*	94.5 (3.720)	102.7 (4.043)	44.5 (1.752)	12 (0.472)	42 (1.654)	29 (1.142)	46 (1.811)
010182056	CM5 / *MT5*	128.5 (5.059)	129.5 (5.098)	51.5 (2.028)	15 (0.591)	62 (2.441)	45 (1.772)	68 (2.677)

同心度 /CONCENTRICITY 0.005

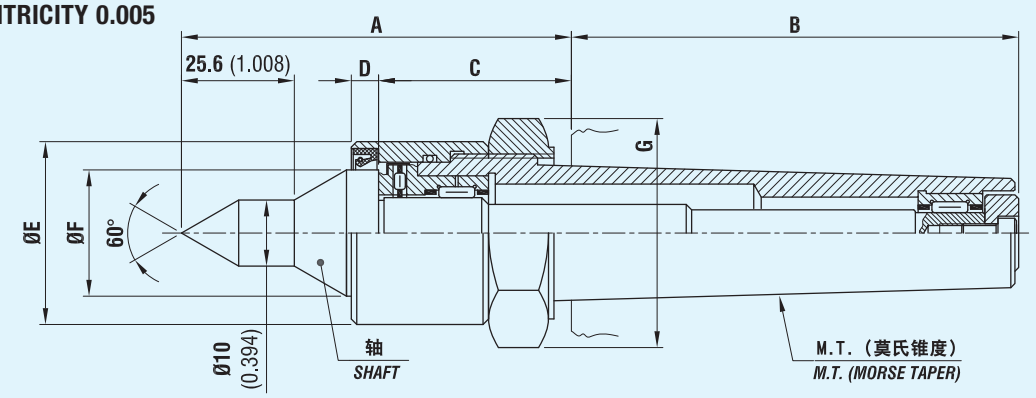

代码 *Code*	莫氏锥度 *Morse Taper*	尺寸 mm（英寸）/ Dimensions in mm (inch)						
		A	*B*	*C*	*D*	*Ø E*	*Ø F*	*G*
010182034	CM3 / *MT3*	93 (3.661)	84.2 (3.315)	43 (1.693)	6 (0.236)	42 (1.654)	29 (1.142)	46 (1.811)
010182044	CM4 / *MT4*	94.5 (3.720)	102.7 (4.043)	44.5 (1.752)	6 (0.236)	42 (1.654)	29 (1.142)	46 (1.811)
010182054	CM5 / *MT5*	115.5 (4.547)	129.5 (5.098)	51.5 (2.028)	6 (0.236)	62 (2.441)	45 (1.772)	68 (2.677)

同心度 /CONCENTRICITY 0.005

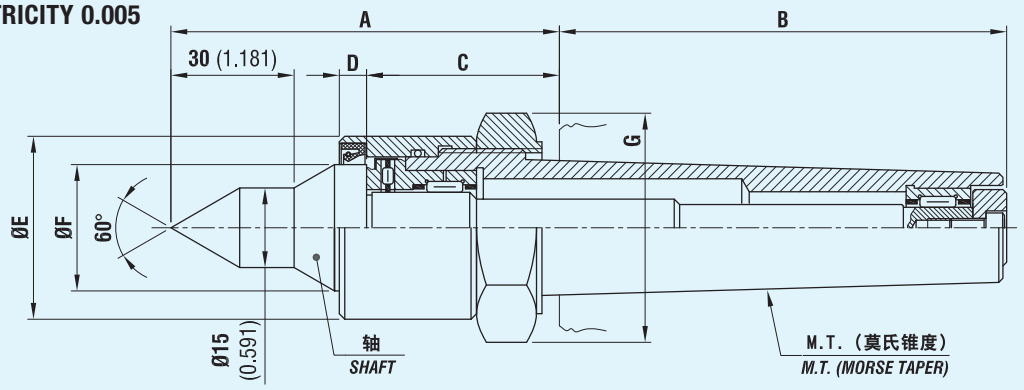

代码 *Code*	莫氏锥度 *Morse Taper*	尺寸 mm（英寸）/ Dimensions in mm (inch)						
		A	*B*	*C*	*D*	*Ø E*	*Ø F*	*G*
010182035	CM3 / *MT3*	93 (3.661)	84.2 (3.315)	43 (1.693)	6 (0.236)	42 (1.654)	29 (1.142)	46 (1.811)
010182045	CM4 / *MT4*	94.5 (3.720)	102.7 (4.043)	44.5 (1.752)	6 (0.236)	42 (1.654)	29 (1.142)	46 (1.811)
010182055	CM5 / *MT5*	115.5 (4.547)	129.5 (5.098)	51.5 (2.028)	6 (0.236)	62 (2.441)	45 (1.772)	68 (2.677)

同心度 /CONCENTRICITY 0.005

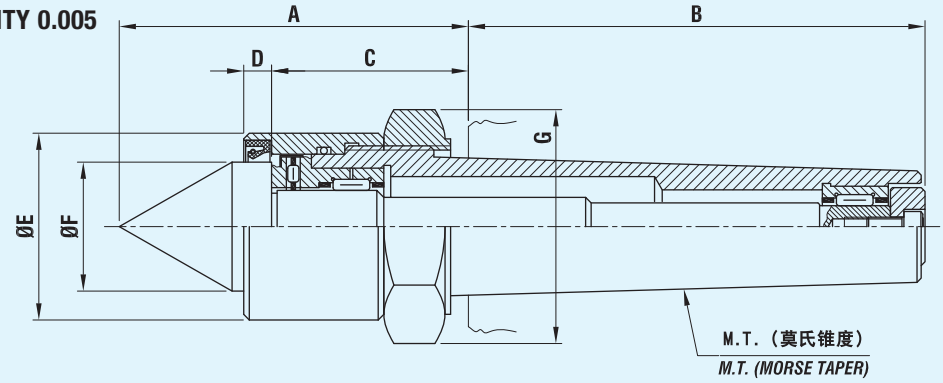

代码 *Code*	莫氏锥度 *Morse Taper*	尺寸 mm（英寸）/ Dimensions in mm (inch)						
		A	*B*	*C*	*D*	*Ø E*	*Ø F*	*G*
010182031	CM3 / *MT3*	77 (3.031)	84.2 (3.315)	43 (1.693)	6 (0.236)	42 (1.654)	29 (1.142)	46 (1.811)
010182041	CM4 / *MT4*	78.5 (3.091)	102.7 (4.043)	44.5 (1.752)	6 (0.236)	42 (1.654)	29 (1.142)	46 (1.811)
010182051	CM5 / *MT5*	98.5 (3.878)	129.5 (5.098)	51.5 (2.028)	6 (0.236)	62 (2.441)	45 (1.772)	68 (2.677)

同心度 /CONCENTRICITY 0.005

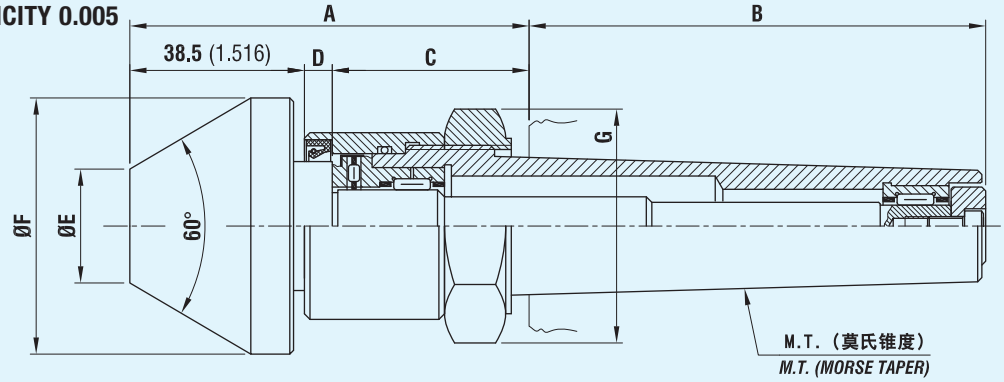

代码 *Code*	莫氏锥度 *Morse Taper*	尺寸 mm（英寸）/ Dimensions in mm (inch)						
		A	*B*	*C*	*D*	*Ø E*	*Ø F*	*G*
010182037	CM3 / *MT3*	87.5 (3.445)	84.2 (3.315)	43 (1.693)	6 (0.236)	25 (0.984)	58 (2.283)	46 (1.811)
010182047	CM4 / *MT4*	89 (3.504)	102.7 (4.043)	44.5 (1.752)	6 (0.236)	25 (0.984)	58 (2.283)	46 (1.811)
010182057	CM5 / *MT5*	96 (3.780)	129.5 (5.098)	51.5 (2.028)	6 (0.236)	35 (1.378)	68 (2.677)	68 (2.677)

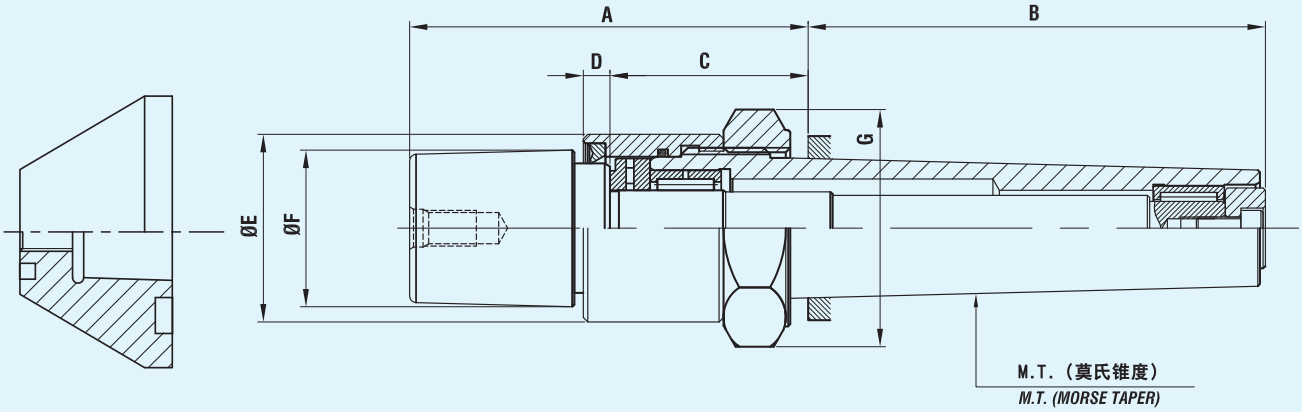

请参见第 15 页的加工头

See heads on page 15

代码 *Code*	莫氏锥度 *Morse Taper*	尺寸 mm（英寸）/ Dimensions in mm (inch)						
		A	*B*	*C*	*D*	*Ø E*	*Ø F*	*G*
010182033	CM3 / *MT3*	88 (3.465)	84.2 (3.315)	43 (1.693)	6 (0.236)	42 (1.654)	35 (1.378)	46 (1.811)
010182043	CM4 / *MT4*	89.5 (3.524)	102.7 (4.043)	44.5 (1.752)	6 (0.236)	42 (1.654)	35 (1.378)	46 (1.811)
010182053	CM5 / *MT5*	100.5 (3.957)	129.5 (5.098)	51.5 (2.028)	6 (0.236)	63 (2.480)	35 (1.378)	68 (2.677)

含轴向负荷分布和整体轴的轴车削增强型 “FRB” 活顶尖 MT6

REINFORCED “FRB” LIVE CENTER MT6 WITH AXIAL LOAD DISTRIBUTION AND INTEGRAL SHAFT FOR TURNING OF SHAFTS

“86 系列”
“86 SERIES”

同心度 /CONCENTRICITY 0.010

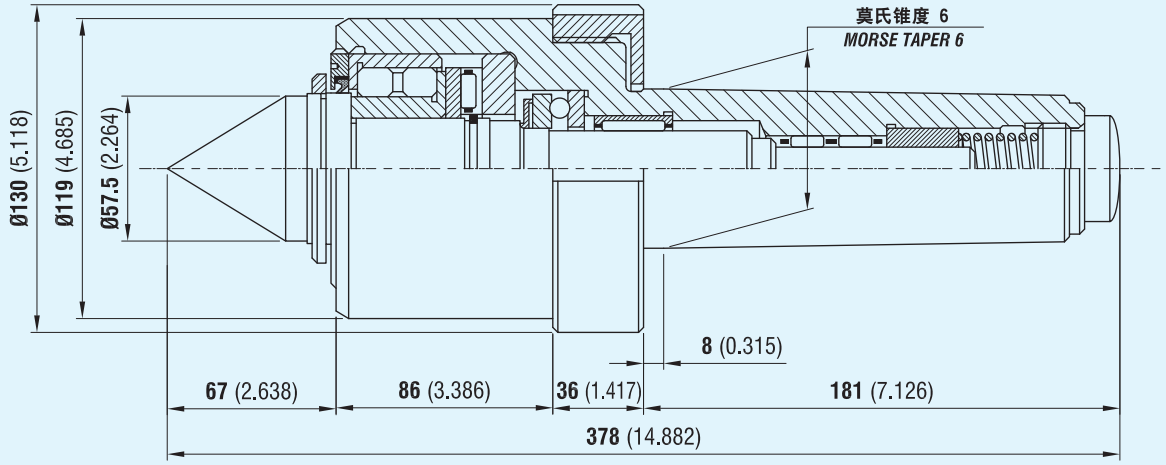

代码 *Code*	莫氏锥度 *Morse Taper*	最大轴向负荷 *Max axial load* Kg/Lb	最大径向负荷（工件重量） *Max radial load (Workpiece weight)* Kg/Lb	最高速度 *Max speed* r.p.m.
010186161	CM6 / *MT6*	10.800/23.809.52	7.000/15.432.10	1000

不含拔取螺母、含整体轴的轴车削 “FRB” 活顶尖 MT80 和 MT100

“FRB” LIVE CENTER MT80 AND MT100 WITHOUT EXTRACTION NUT, WITH INTEGRAL SHAFT FOR TURNING OF SHAFTS

“87 系列”
“87 SERIES”

同心度 /CONCENTRICITY 0.010

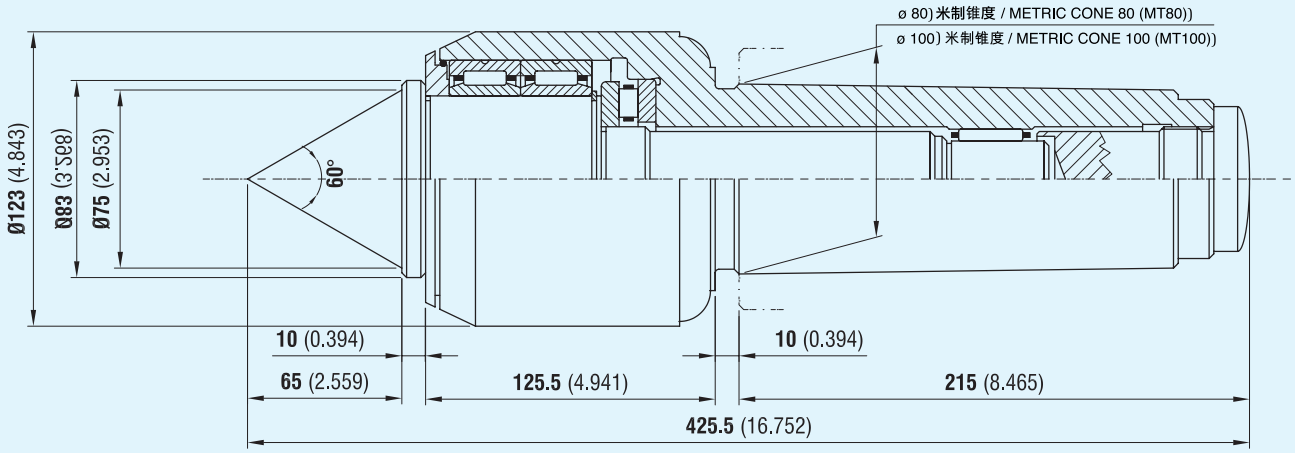

代码 *Code*	莫氏锥度 *Morse Taper*	最大轴向负荷 *Max axial load* Kg/Lb	最大径向负荷（工件重量） *Max radial load (Workpiece weight)* Kg/Lb	最高速度 *Max speed* r.p.m.
010187161	METRICO 80 / *MT80*	12.000/26.455.03	18.000/39.682.54	800
010187162	METRICO 100 / *MT100*	12.000/26.455.03	18.000/39.682.54	800

含满滚子和整体轴的轴车削及磨削“FRB”活顶尖

“FRB” LIVE CENTER WITH FULL FILLING ROLLERS AND INTEGRAL SHAFT FOR TURNING AND GRINDING OF SHAFTS

“88 系列”
“88 SERIES”

同心度 /CONCENTRICITY 0.005

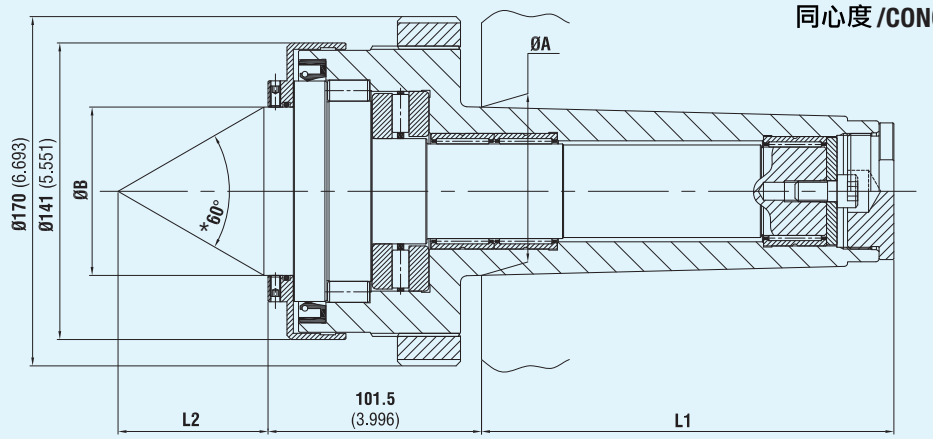

* 按需求提供 75°/90°
** on request 75°/90°*

代码 *Code*	莫氏锥度 *Morse Taper*	尺寸 mm（英寸）/ *Dimensions in mm (inch)*				最大轴向负荷 *Max axial load* Kg/Lb	最大径向负荷（工件重量）*Max radial load (Workpiece weight)* Kg/Lb	最高速度 *Max speed* r.p.m.
		A	*Ø B*	*L1*	*L2*			
010921104	CM6/MT6	63.348 (2.494)	60 (2.362)	185 (7.283)	54 (2.126)	12.000/26,455.03	9.000/19,841.27	500
010921105	CM7/MT7	83.061 (3.270)	80 (3.150)	232 (9.134)	71.3 (2.807)	12.000/26,455.03	16.000/35,273.37	500
010921106	M80/MT80	80 (3.150)	80 (3.150)	196 (7.717)	71.3 (2.807)	12.000/26,455.03	16.000/35,273.37	500
010921107	M100/MT100	100 (3.937)	80 (3.150)	232 (9.134)	71.3 (2.807)	12.000/26,455.03	16.000/35,273.37	500
010921108	M120/MT120	120 (4.724)	80 (3.150)	247 (9.724)	70 (2.756)	12.000/26,455.03	16.000/35,273.37	500
010921109	M160/MT160	函索 / *On request*						

含满滚子和承载整体轴的加工头的管道车削及磨削“FRB”活顶尖

“FRB” LIVE CENTER WITH FULL FILLING ROLLERS AND HEAD CARRYING INTEGRAL SHAFT FOR TURNING AND GRINDING OF PIPES

“88 系列”
“88 SERIES”

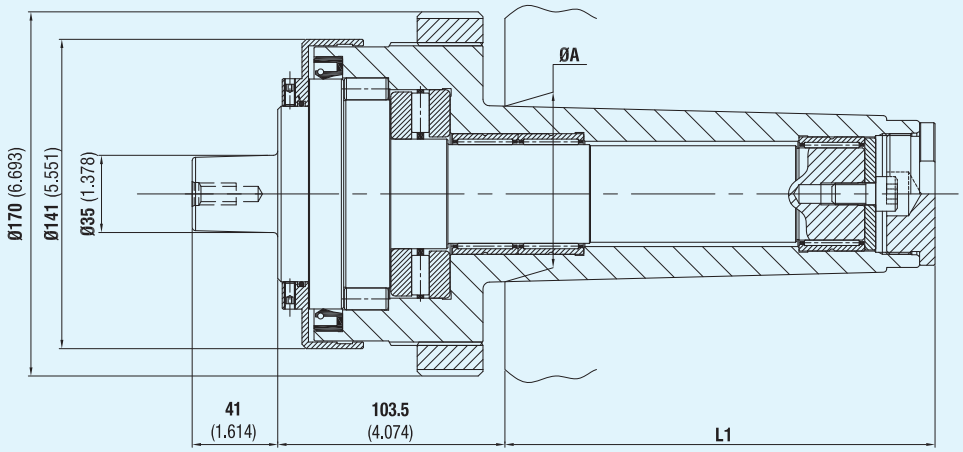

代码 *Code*	莫氏锥度 *Morse Taper*	尺寸 mm（英寸）/ *Dimensions in mm (inch)*		最大轴向负荷 *Max axial load* Kg/Lb	最大径向负荷（工件重量）*Max radial load (Workpiece weight)* Kg/Lb	最高速度 *Max speed* r.p.m.
		A	*L1*			
010922104	CM6/MT6	63.348 (2.494)	185 (7.283)	12.000/26,455.03	9.000/19,841.27	500
010922105	CM7/MT7	83.061 (3.270)	232 (9.134)	12.000/26,455.03	16.000/35,273.37	500
010922106	M80/MT80	80 (3.150)	196 (7.717)	12.000/26,455.03	16.000/35,273.37	500
010922107	M100/MT100	100 (3.937)	232 (9.134)	12.000/26,455.03	16.000/35,273.37	500
010922108	M120/MT120	120 (4.724)	247 (9.724)	12.000/26,455.03	16.000/35,273.37	500

请参见第 15 页的加工头

See heads on page 15

含 60° 硬金属夹点的常规固定顶尖

NORMAL DEAD CENTERS WITH A 60° POINT IN HARD METAL

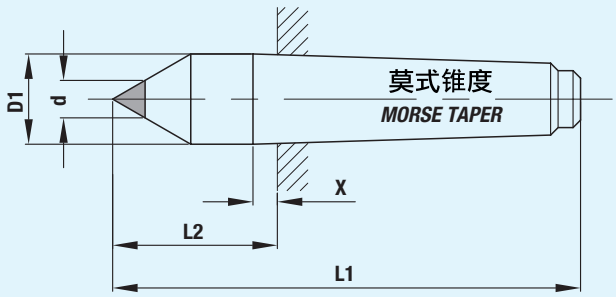

Type "N" (Normal) "N" (常规) 类型

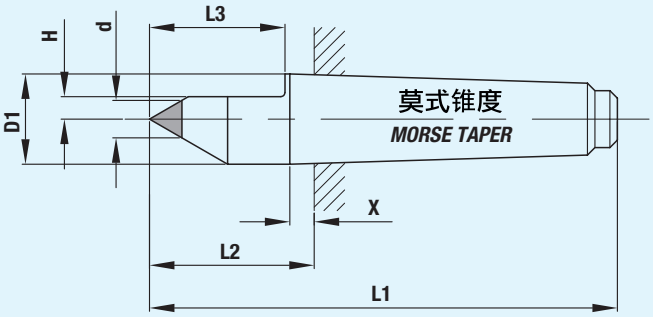

Type "N.S." (Normal-Lowered) "N.S." (常规－低位) 类型

代码 Code	类型 Type	尺寸 mm (英寸) Dimensions in mm (inch)					
		M.T.	d	D_1	L_1	L_2	X
191901061	N	1	6 (0.236)	12.2 (0.480)	80 (3.150)	26.5 (1.043)	3.5 (0.138)
191901081	N	1	8 (0.315)	12.2 (0.480)	80 (3.150)	26.5 (1.043)	3.5 (0.138)
191901101	N	1	10 (0.394)	12.2 (0.480)	80 (3.150)	26.5 (1.043)	3.5 (0.138)
191901062	N	2	6 (0.236)	18 (0.709)	100 (3.937)	36 (1.417)	5 (0.197)
191901082	N	2	8 (0.315)	18 (0.709)	100 (3.937)	36 (1.417)	5 (0.197)
191901102	N	2	10 (0.394)	18 (0.709)	100 (3.937)	36 (1.417)	5 (0.197)
191901142	N	2	14 (0.551)	18 (0.709)	100 (3.937)	36 (1.417)	5 (0.197)
191901182	N	2	18 (0.709)	18 (0.709)	100 (3.937)	36 (1.417)	5 (0.197)
191901063	N	3	6 (0.236)	24.1 (0.949)	125 (4.921)	44 (1.732)	5 (0.197)
191901083	N	3	8 (0.315)	24.1 (0.949)	125 (4.921)	44 (1.732)	5 (0.197)
191901103	N	3	10 (0.394)	24.1 (0.949)	125 (4.921)	44 (1.732)	5 (0.197)
191901143	N	3	14 (0.551)	24.1 (0.949)	125 (4.921)	44 (1.732)	5 (0.197)
191901183	N	3	18 (0.709)	24.1 (0.949)	125 (4.921)	44 (1.732)	5 (0.197)
191901233	N	3	23 (0.906)	24.1 (0.949)	125 (4.921)	44 (1.732)	5 (0.197)
191901064	N	4	6 (0.236)	31.6 (1.244)	160 (6.299)	57.5 (2.264)	6.5 (0.256)
191901084	N	4	8 (0.315)	31.6 (1.244)	160 (6.299)	57.5 (2.264)	6.5 (0.256)
191901104	N	4	10 (0.394)	31.6 (1.244)	160 (6.299)	57.5 (2.264)	6.5 (0.256)
191901144	N	4	14 (0.551)	31.6 (1.244)	160 (6.299)	57.5 (2.264)	6.5 (0.256)
191901184	N	4	18 (0.709)	31.6 (1.244)	160 (6.299)	57.5 (2.264)	6.5 (0.256)
191901234	N	4	23 (0.906)	31.6 (1.244)	160 (6.299)	57.5 (2.264)	6.5 (0.256)
191901304	N	4	30 (1.181)	31.6 (1.244)	160 (6.299)	57.5 (2.264)	6.5 (0.256)
191901125	N	5	12 (0.472)	44.7 (1.760)	200 (7.874)	70.5 (2.776)	6.5 (0.256)
191901165	N	5	16 (0.630)	44.7 (1.760)	200 (7.874)	70.5 (2.776)	6.5 (0.256)
191901205	N	5	20 (0.787)	44.7 (1.760)	200 (7.874)	70.5 (2.776)	6.5 (0.256)
191901265	N	5	26 (1.024)	44.7 (1.760)	200 (7.874)	70.5 (2.776)	6.5 (0.256)
191901305	N	5	30 (1.181)	44.7 (1.760)	200 (7.874)	70.5 (2.776)	6.5 (0.256)

代码 Code	类型 Type	尺寸 mm (英寸) Dimensions in mm (inch)				
		M.T.	d	H	L_3	X
191902061	N.S.	1	6 (0.236)	4 (0.157)	20 (0.787)	3.5 (0.138)
191902062	N.S.	2	6 (0.236)	4 (0.157)	29 (1.142)	5 (0.197)
191902082	N.S.	2	8 (0.315)	5 (0.197)	29 (1.142)	5 (0.197)
191902122	N.S.	2	12 (0.472)	7 (0.276)	29 (1.142)	5 (0.197)
191902063	N.S.	3	6 (0.236)	4 (0.157)	37 (1.457)	5 (0.197)
191902083	N.S.	3	8 (0.315)	5 (0.197)	37 (1.457)	5 (0.197)
191902103	N.S.	3	10 (0.394)	6 (0.236)	37 (1.457)	5 (0.197)
191902143	N.S.	3	14 (0.551)	8 (0.315)	37 (1.457)	5 (0.197)
191902064	N.S.	4	6 (0.236)	4 (0.157)	48 (1.890)	6.5 (0.256)
191902084	N.S.	4	8 (0.315)	5 (0.197)	48 (1.890)	6.5 (0.256)
191902124	N.S.	4	12 (0.472)	7 (0.276)	48 (1.890)	6.5 (0.256)
191902164	N.S.	4	16 (0.630)	9 (0.354)	48 (1.890)	6.5 (0.256)
191902204	N.S.	4	20 (0.787)	12 (0.472)	48 (1.890)	6.5 (0.256)
191902105	N.S.	5	10 (0.394)	6 (0.236)	60 (2.362)	6.5 (0.256)
191902145	N.S.	5	14 (0.551)	8 (0.315)	60 (2.362)	6.5 (0.256)
191902185	N.S.	5	18 (0.709)	10 (0.394)	60 (2.362)	6.5 (0.256)
191902235	N.S.	5	23 (0.906)	12.5 (0.492)	60 (2.362)	6.5 (0.256)
191902305	N.S.	5	30 (1.181)	16 (0.630)	60 (2.362)	6.5 (0.256)

缺少的维度看左边的表 "N" 类型。

You can find absent dimensions on left side table for type "N".

注：关于这些尺寸，请联系我们的技术部门

WARNING: *contact our technical department for these dimensions*

我们可以按需要，依照您的图纸,制造特殊固定尖及配所有锥度类型或特殊接头。

On request we can manufacture special dead centers as per your drawing with every kind of special taper and connection

含 60° 硬金属夹点的延长固定顶尖

EXTENDED DEAD CENTERS WITH A 60° POINT IN HARD METAL

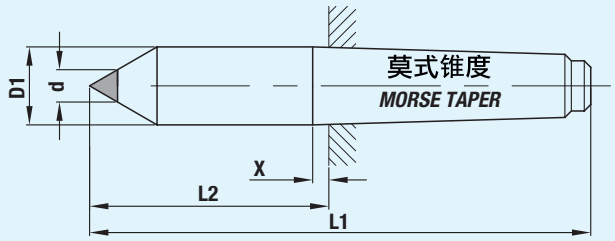

Type "P" (Extended) "P" （延长）类型

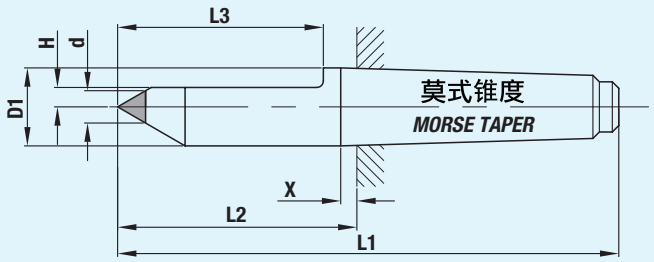

Type "P.S." (Extended-Lowered) "P.S." （延长－低位）

代码 Code	类型 Type	尺寸 mm（英寸）/Dimensions in mm (inch)					
		M.T.	d	D_1	L_1	L_2	X
191903061	P	1	6 (0.236)	12.2 (0.480)	100 (3.937)	46.5 (1.831)	3.5 (0.138)
191903081	P	1	8 (0.315)	12.2 (0.480)	100 (3.937)	46.5 (1.831)	3.5 (0.138)
191903101	P	1	10 (0.394)	12.2 (0.480)	100 (3.937)	46.5 (1.831)	3.5 (0.138)
191903062	P	2	6 (0.236)	18 (0.709)	120 (4.724)	56 (2.205)	5 (0.197)
191903082	P	2	8 (0.315)	18 (0.709)	120 (4.724)	56 (2.205)	5 (0.197)
191903102	P	2	10 (0.394)	18 (0.709)	120 (4.724)	56 (2.205)	5 (0.197)
191903142	P	2	14 (0.551)	18 (0.709)	120 (4.724)	56 (2.205)	5 (0.197)
191903182	P	2	18 (0.709)	18 (0.709)	120 (4.724)	56 (2.205)	5 (0.197)
191903063	P	3	6 (0.236)	24.1 (0.949)	155 (6.102)	74 (2.913)	5 (0.197)
191903083	P	3	8 (0.315)	24.1 (0.949)	155 (6.102)	74 (2.913)	5 (0.197)
191903103	P	3	10 (0.394)	24.1 (0.949)	155 (6.102)	74 (2.913)	5 (0.197)
191903143	P	3	14 (0.551)	24.1 (0.949)	155 (6.102)	74 (2.913)	5 (0.197)
191903183	P	3	18 (0.709)	24.1 (0.949)	155 (6.102)	74 (2.913)	5 (0.197)
191903233	P	3	23 (0.906)	24.1 (0.949)	155 (6.102)	74 (2.913)	5 (0.197)
191903064	P	4	6 (0.236)	31.6 (1.244)	195 (7.677)	92.5 (3.642)	6.5 (0.256)
191903084	P	4	8 (0.315)	31.6 (1.244)	195 (7.677)	92.5 (3.642)	6.5 (0.256)
191903104	P	4	10 (0.394)	31.6 (1.244)	195 (7.677)	92.5 (3.642)	6.5 (0.256)
191903144	P	4	14 (0.551)	31.6 (1.244)	195 (7.677)	92.5 (3.642)	6.5 (0.256)
191903184	P	4	18 (0.709)	31.6 (1.244)	195 (7.677)	92.5 (3.642)	6.5 (0.256)
191903234	P	4	23 (0.906)	31.6 (1.244)	195 (7.677)	92.5 (3.642)	6.5 (0.256)
191903304	P	4	30 (1.181)	31.6 (1.244)	195 (7.677)	92.5 (3.642)	6.5 (0.256)
191903125	P	5	12 (0.472)	44.7 (1.760)	240 (9.449)	110.5 (4.350)	6.5 (0.256)
191903165	P	5	16 (0.630)	44.7 (1.760)	240 (9.449)	110.5 (4.350)	6.5 (0.256)
191903205	P	5	20 (0.787)	44.7 (1.760)	240 (9.449)	110.5 (4.350)	6.5 (0.256)
191903265	P	5	26 (1.024)	44.7 (1.760)	240 (9.449)	110.5 (4.350)	6.5 (0.256)
191903305	P	5	30 (1.181)	44.7 (1.760)	240 (9.449)	110.5 (4.350)	6.5 (0.256)

代码 Code	类型 Type	尺寸 mm（英寸）/Dimensions in mm (inch)				
		M.T.	d	H	L_3	X
191904061	P.S.	1	6 (0.236)	4 (0.157)	40 (1.575)	3.5 (0.138)
191904062	P.S.	2	6 (0.236)	4 (0.157)	49 (1.929)	5 (0.197)
191904082	P.S.	2	8 (0.315)	5 (0.197)	49 (1.929)	5 (0.197)
191904122	P.S.	2	12 (0.472)	7 (0.276)	49 (1.929)	5 (0.197)
191904063	P.S.	3	6 (0.236)	4 (0.157)	67 (2.638)	5 (0.197)
191904083	P.S.	3	8 (0.315)	5 (0.197)	67 (2.638)	5 (0.197)
191904103	P.S.	3	10 (0.394)	6 (0.236)	67 (2.638)	5 (0.197)
191904143	P.S.	3	14 (0.551)	8 (0.315)	67 (2.638)	5 (0.197)
191904064	P.S.	4	6 (0.236)	4 (0.157)	83 (3.268)	6.5 (0.256)
191904084	P.S.	4	8 (0.315)	5 (0.197)	83 (3.268)	6.5 (0.256)
191904124	P.S.	4	12 (0.472)	7 (0.276)	83 (3.268)	6.5 (0.256)
191904164	P.S.	4	16 (0.630)	9 (0.354)	83 (3.268)	6.5 (0.256)
191904204	P.S.	4	20 (0.787)	12 (0.472)	83 (3.268)	6.5 (0.256)
191904105	P.S.	5	10 (0.394)	6 (0.236)	100(3.937)	6.5 (0.256)
191904145	P.S.	5	14 (0.551)	8 (0.315)	100(3.937)	6.5 (0.256)
191904185	P.S.	5	18 (0.709)	10 (0.394)	100(3.937)	6.5 (0.256)
191904235	P.S.	5	23 (0.906)	12.5(0.492)	100(3.937)	6.5 (0.256)
191904305	P.S.	5	30 (1.181)	16 (0.630)	100(3.937)	6.5 (0.256)

缺少的维度看左边的表"N"类型。

You can find absent dimensions on left side table for type "N".

注：关于这些尺寸，请联系我们的技术部门

WARNING: *contact our technical department for these dimensions*

我们可以按需要，依照您的图纸,制造特殊固定尖及配所有锥度类型或特殊接头。

On request we can manufacture special dead centers as per your drawing with every kind of special taper and connection

含 60° 硬金属头的固定顶尖

DEAD CENTERS WITH A 60° HEAD IN HARD METAL

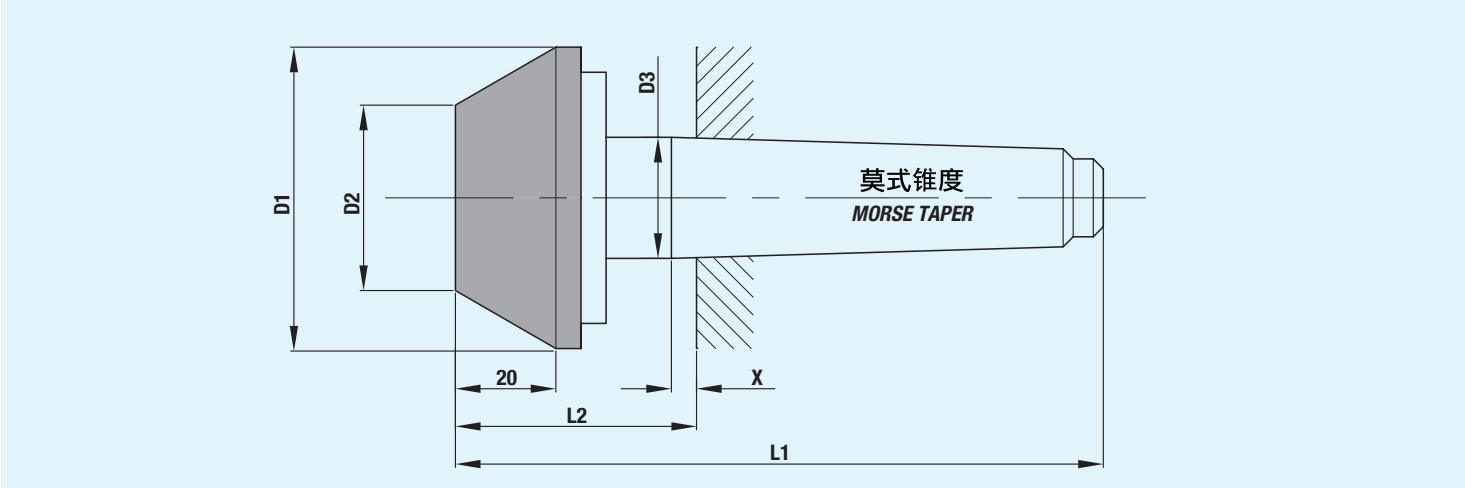

代码 Code	尺寸 mm（英寸）/Dimensions in mm (inch)						
	M.T.	D_1	D_2	D_3	L_1	L_2	X
202030072	2	30 (1.181)	7 (0.276)	18 (0.709)	112 (4.409)	48 (1.890)	5 (0.197)
202035122	2	35 (1.378)	12 (0.472)	18 (0.709)	112 (4.409)	48 (1.890)	5 (0.197)
202040172	2	40 (1.575)	17 (0.669)	18 (0.709)	112 (4.409)	48 (1.890)	5 (0.197)
202045222	2	45 (1.772)	22 (0.866)	18 (0.709)	112 (4.409)	48 (1.890)	5 (0.197)
202050272	2	50 (1.969)	27 (1.063)	18 (0.709)	112 (4.409)	48 (1.890)	5 (0.197)
202030073	3	30 (1.181)	7 (0.276)	24.1 (0.949)	129 (5.079)	48 (1.890)	5 (0.197)
202035123	3	35 (1.378)	12 (0.472)	24.1 (0.949)	129 (5.079)	48 (1.890)	5 (0.197)
202040173	3	40 (1.575)	17 (0.669)	24.1 (0.949)	129 (5.079)	48 (1.890)	5 (0.197)
202045223	3	45 (1.772)	22 (0.866)	24.1 (0.949)	129 (5.079)	48 (1.890)	5 (0.197)
202050273	3	50 (1.969)	27 (1.063)	24.1 (0.949)	129 (5.079)	48 (1.890)	5 (0.197)
202055323	3	55 (2.165)	32 (1.260)	24.1 (0.949)	129 (5.079)	48 (1.890)	5 (0.197)
202060373	3	60 (2.362)	37 (1.457)	24.1 (0.949)	129 (5.079)	48 1.890)	5 (0.197)
202065423	3	65 (2.559)	42 (1.654)	24.1 (0.949)	129 (5.079)	48 (1.890)	5 (0.197)
202070473	3	70 (2.756)	47 (1.850)	24.1 (0.949)	129 (5.079)	48 (1.890)	5 (0.197)
202075523	3	75 (2.953)	52 (2.047)	24.1 (0.949)	129 (5.079)	48 (1.890)	5 (0.197)
202080573	3	80 (3.150)	57 (2.244)	24.1 (0.949)	129 (5.079)	48 (1.890)	5 (0.197)
202085623	3	85 (3.346)	62 (2.441)	24.1 (0.949)	129 (5.079)	48 (1.890)	5 (0.197)
202090673	3	90 (3.543)	67 (2.638)	24.1 (0.949)	129 (5.079)	48 (1.890)	5 (0.197)
202095723	3	95 (3.740)	72 (2.835)	24.1 (0.949)	129 (5.079)	48 (1.890)	5 (0.197)
202000773	3	100 (3.937)	77 (3.031)	24.1 (0.949)	129 (5.079)	48 (1.890)	5 (0.197)
202030074	4	30 (1.181)	7 (0.276)	31.6 (1.244)	162 (6.378)	60 (2.362)	6.5 (0.256)
202035124	4	35 (1.378)	12 (0.472)	31.6 (1.244)	162 (6.378)	60 (2.362)	6.5 (0.256)
202040174	4	40 (1.575)	17 (0.669)	31.6 (1.244)	162 (6.378)	60 (2.362)	6.5 (0.256)
202045224	4	45 (1.772)	22 (0.866)	31.6 (1.244)	162 (6.378)	60 (2.362)	6.5 (0.256)
202050274	4	50 (1.969)	27 (1.063)	31.6 (1.244)	162 (6.378)	60 (2.362)	6.5 (0.256)
202055324	4	55 (2.165)	32 (1.260)	31.6 (1.244)	162 (6.378)	60 (2.362)	6.5 (0.256)
202060374	4	60 (2.362)	37 (1.457)	31.6 (1.244)	162 (6.378)	60 (2.362)	6.5 (0.256)
202065424	4	65 (2.559)	42 (1.654)	31.6 (1.244)	162 (6.378)	60 (2.362)	6.5 (0.256)
202070474	4	70 (2.756)	47 (1.850)	31.6 (1.244)	162 (6.378)	60 (2.362)	6.5 (0.256)
202075524	4	75 (2.953)	52 (2.047)	31.6 (1.244)	162 (6.378)	60 (2.362)	6.5 (0.256)
202080574	4	80 (3.150)	57 (2.244)	31.6 (1.244)	162 (6.378)	60 (2.362)	6.5 (0.256)
202085624	4	85 (3.346)	62 (2.441)	31.6 (1.244)	162 (6.378)	60 (2.362)	6.5 (0.256)
202090674	4	90 (3.543)	67 (2.638)	31.6 (1.244)	162 (6.378)	60 (2.362)	6.5 (0.256)

代码 Code	尺寸 mm（英寸）/Dimensions in mm (inch)						
	M.T.	D_1	D_2	D_3	L_1	L_2	X
202095724	4	95 (3.740)	72 (2.835)	31.6 (1.244)	162 (6.378)	60 (2.362)	6.5 (0.256)
202000774	4	100 (3.937)	77 (3.031)	31.6 (1.244)	162 (6.378)	60 (2.362)	6.5 (0.256)
202030075	5	30 (1.181)	7 (0.276)	44.7 (1.760)	200 (7.874)	70 (2.756)	6.5 (0.256)
202035125	5	35 (1.378)	12 (0.472)	44.7 (1.760)	200 (7.874)	70 (2.756)	6.5 (0.256)
202040175	5	40 (1.575)	17 (0.669)	44.7 (1.760)	200 (7.874)	70 (2.756)	6.5 (0.256)
202045225	5	45 (1.772)	22 (0.866)	44.7 (1.760)	200 (7.874)	70 (2.756)	6.5 (0.256)
202050275	5	50 (1.969)	27 (1.063)	44.7 (1.760)	200 (7.874)	70 (2.756)	6.5 (0.256)
202055325	5	55 (2.165)	32 (1.260)	44.7 (1.760)	200 (7.874)	70 (2.756)	6.5 (0.256)
202060375	5	60 (2.362)	37 (1.457)	44.7 (1.760)	200 (7.874)	70 (2.756)	6.5 (0.256)
202065425	5	65 (2.559)	42 (1.654)	44.7 (1.760)	200 (7.874)	70 (2.756)	6.5 (0.256)
202070475	5	70 (2.756)	47 (1.850)	44.7 (1.760)	200 (7.874)	70 (2.756)	6.5 (0.256)
202075525	5	75 (2.953)	52 (2.047)	44.7 (1.760)	200 (7.874)	70 (2.756)	6.5 (0.256)
202080575	5	80 (3.150)	57 (2.244)	44.7 (1.760)	200 (7.874)	70 (2.756)	6.5 (0.256)
202085625	5	85 (3.346)	62 (2.441)	44.7 (1.760)	200 (7.874)	70 (2.756)	6.5 (0.256)
202090675	5	90 (3.543)	67 (2.638)	44.7 (1.760)	200 (7.874)	70 (2.756)	6.5 (0.256)
202095725	5	95 (3.740)	72 (2.835)	44.7 (1.760)	200 (7.874)	70 (2.756)	6.5 (0.256)
202000775	5	100 (3.937)	77 (3.031)	44.7 (1.760)	200 (7.874)	70 (2.756	6.5 (0.256)

我们可以按需要，依照您的图纸,制造特殊固定尖及配所有锥度类型或特殊接头。

On request we can manufacture special dead centers as per your drawing with every kind of special taper and connection

已获专利的端面驱动顶尖
PATENTED FACE DRIVERS

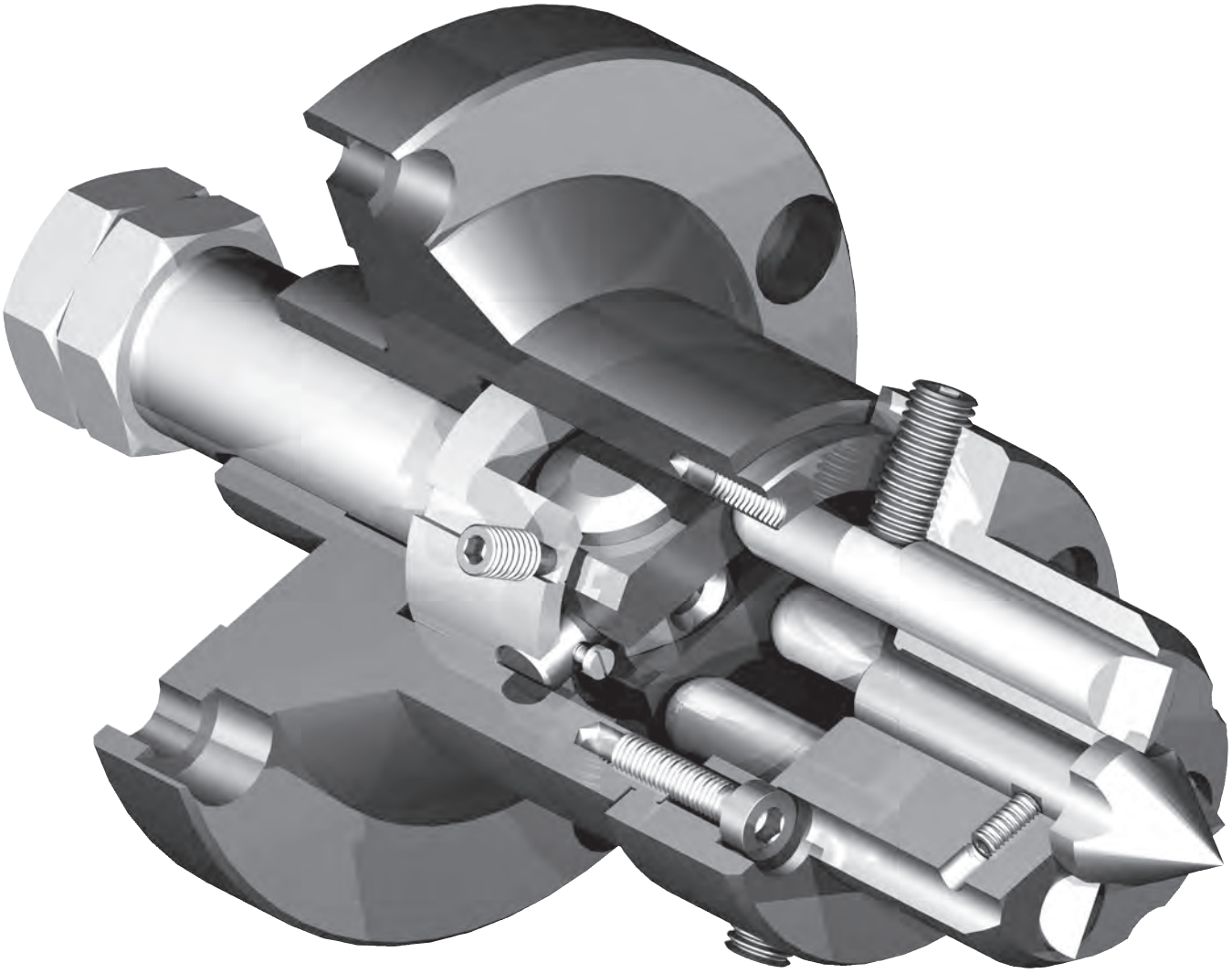

含 4 个独立传动销的端面驱动顶尖 .... 全球独一无二的系统！

FACE DRIVER WITH 4 INDIPENDENTS DRIVING PINS.... A UNIQUE SYSTEM ALL OVER THE WORLD!

顶尖轴 FR.B. 端面驱动顶尖的技术特性

TECHNICAL FEATURES OF F.R.B. FACE DRIVERS FOR CENTERED SHAFTS

F.R.B. 端面驱动顶尖工作时采用可实现四销传动的楔杆操纵已获专利的补偿系统。该系统可调节性极高并在最困难情况下确保安全而可靠的转矩传输；例如粗面或端面斜度相对于旋转轴有 3mm 距离。
顶尖不与传动销相连并靠在嵌入莫氏圆锥的蝶形弹簧垫圈总成上。即使顶尖尺寸发生变化，也能在工作中保持最佳重复定位。
可轻松拆下顶尖端。无需从机床上拆下端面驱动顶尖。
含插槽的可互换顶尖甚至可以车削尾端件带孔的工件。
F.R.B.端面驱动顶尖极佳的传动效率意味着，可以充分利用最先进机床的所有最先进行能。
重点：如需获得切割参数，请一定要联系我们的技术部门 （电话：051/846760）
电邮info@tecnologiefrb.com

F.R.B. face drivers work by a patented compensating system, operated by wedge lever, which allows four-pin driving. This system is highly adjustable and ensures safe and reliable torque transmission under the most difficult conditions; such as rough surfaces or obliqueness of end faces by as much as 3 mm in relation to the rotation axis.

The center is independent of the driving pins and rests against a belleville spring washer assembly lodged inside the Morse taper. Even with varying center sizes, work positioning is maintained with optimal repeatability.

The center point can be easily removed. There is no need to remove the face driver from the machine tool. The interchangeability of centers with slots enables turning even of workpieces with holes in the end piece.

The superior driving efficiency of the F.R.B. face drivers means that the full state-of-the-art performance of even the most advanced machine tools can be fully exploited.

Important: for cutting parameters, always contact our technical department (phone: 051/846760). **E-mail: info@tecnologiefrb.com**

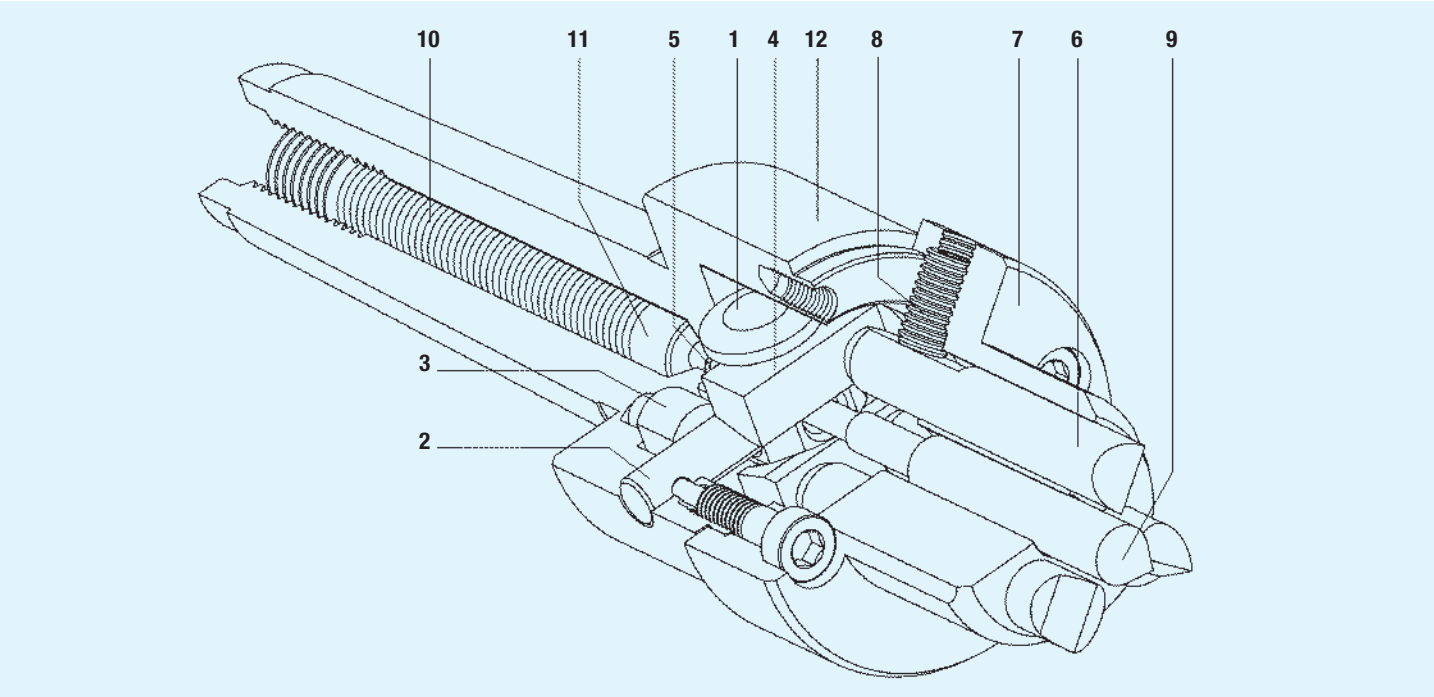

所有 F.R.B. 端面驱动顶尖均采用系统补偿楔杆。该驱动顶尖包括以下部件：

1） 楔杆总成
2） 楔杆支撑销
3） 支撑销座
4） 平衡板
5） 锚定件
6） 传动销
7） 传动销支撑垫圈
8） 传动销固定螺钉
9） 顶尖端
10） 蝶形弹簧垫圈总成
11） 顶尖端支撑油缸
12） 端面驱动顶尖本体

*All **F.R.B.** face drivers use a wedge lever compensating system. The driver consists of these components:*

1) *Wedge lever assembly*
2) *Wedge lever support pin*
3) *Support pin base*
4) *Balancing plates*
5) *Anchor*
6) *Driving pins*
7) *Driving pins support washer*
8) *Driving pins retaining screw*
9) *Center point*
10) *Belleville spring washer assembly*
11) *Center point support cylinder*
12) *Face driver body*

“楔杆”系统的工作原理

HOW THE “WEDGE LEVER” SYSTEM WORKS

楔杆 ① 通过两个支撑销 ② 固定，而这两个支撑销又通过两个辅助销座 ③ 支撑，它们可减少销偏转。楔杆总成有两个平衡板 ④，通过两个名为“锚定件” ⑤ 的弹性组件固定，这些组件固定在平衡板底部。
四个传动销 ⑥ 通过传动销支撑垫圈 ⑦ 导向，旋转间隙由传动销固定螺钉 ⑧ 消除：传动销铰接端置于楔杆的平衡板上。
楔杆专门设计用于补偿传动销所在端面的任何倾斜。这些传动销由特种钒钢和高强度高硬度钼制成。
传动销有两种类型：每个主轴旋向各对应一种类型。
顶尖 ⑨ 不与传动销相连并通过蝶形弹簧承载。弹簧推力通过圆锥体内端面驱动顶尖后部的平头螺钉进行调节。
要加工含孔或大型顶尖的工件，可装配带插槽的端部。有关操作说明，请参见第 37 页。
低位传动销可装在所有机型中，以便从端面驱动顶尖侧直径进行加工，这些直径太细，因而无法被标准尺寸的传动销回转。

The wedge lever ① is held in position by two support pins ② that are themselves supported by two auxiliary supports ③, These reduce pin deflection. The wedge lever assembly has two balancing plates ④ that are held in position by two elastic elements called “anchors” ⑤, These are fixed to the bottom of the balancing plates.

The four driving pins ⑥ are guided by the driving pin support washer ⑦. Rotation play is eliminated by the driving pins retaining screw ⑧: the driving pins rest their rounded end on the wedge lever’s balancing plates.

The wedge lever has been specially designed to compensate any obliqueness of end faces on which the driving pins rest. They are made from specially vanadium steel and higly tensile, hardened molybdenum.

The driving pins are of two types: one for each rotation direction of the spindle.

The center ⑨ is independent of the driving pins and is loaded by the belleville springs. Spring thrust is adjustable by the grub screw at the back of the face driver, inside the cone.

To machine workpieces with holes or large centres, point with slots can be fitted. For operating instuctions, see pag. 37.

Lowered driving pins can be fitted to all models in order to machine from the face driver side diameters that are too thin to be turned by standard size driving pins.

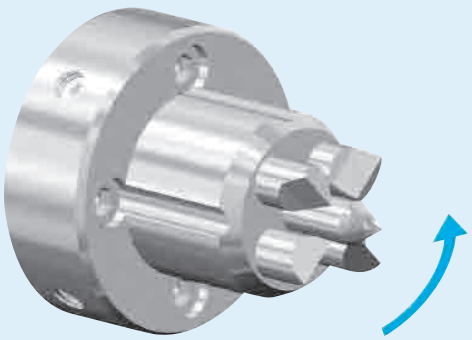

左旋
left rotation

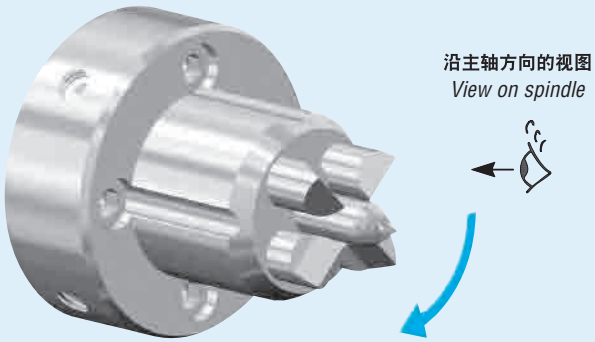

右旋
right rotation

F.R.B. 端面驱动顶尖

配置该 F.R.B. 端面驱动顶尖后，操作员可在不拆卸其他端面驱动顶尖部件的情况下更换传动销和顶尖端。而且还可以实现大型工具的长时间加工。

F.R.B. FACE DRIVER

Enables the operator to change the driving pins and the center point without having to remove other face driver components. It also enables long execution machining by even large tools.

端面驱动顶尖功能特性的正确维护说明

INSTRUCTIONS FOR A CORRECT MAINTENANCE OF THE FACE DRIVER FUNCTIONAL FEATURES

A） 用手插入传动销 ① 并使其沿端面驱动顶尖轴的方向滑动，同时使铣削面朝外。

B） 含垫圈的径向螺钉 ② 堵塞住传动销；只需绕销轴旋转 1/15 毫米便可对准工件表面调节（通过滑动）传动销，即使在表面存在瑕疵或毛刺情况下也是这样。四个径向螺钉已在装配时固定，不得再触动。

C） 我们建议每隔约 400 运行小时取出顶尖端 ③ 和传动销，涂上油脂，在其表面形成一薄层油膜，以防乳状液进入端面驱动顶尖本体。

D） 以相反方式装配蝶形弹簧垫圈 ④ 并用螺钉 ⑤ 压紧，不得再触动。

A) *Insert driving pins by hand ① and make them slide in direction of the face driver's axis, keeping the milled plane turned outwards.*

B) *The radial screws of the washer ② block the driving pins; just a rotation of 2/3 tenth of millimeter around its own axis is permitted to make possible an adjustment (by sliding) of the driving pins against the surface of the workpiece also in case of defects or burr. Four radial screws have been registered during assembling and don't have to be touched anymore.*

C) *Every about 400 working hours we suggest to extract the central point ③ and the driving pins to regrease them in order to create a thin film that avoids introductions of emulsifiable water into the body of the face driver.*

D) *The belleville spring washers ④ are fitted the opposite way and compressed by the screw ⑤ that don't have to be touched.*

P.S.: 上述所有操作（D 项除外）均可在不影响精度的情况下通过装在机器上的端面驱动顶尖完成。

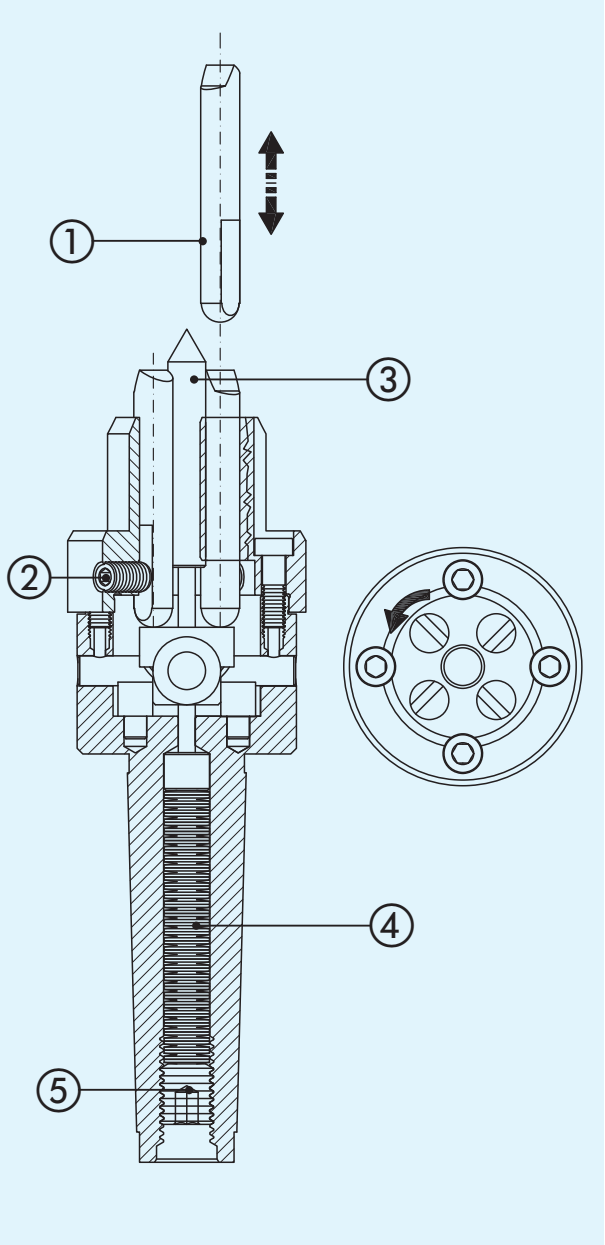

P.S.: *All above mentioned operations, except for point D, can be made with the face driver assembled on the machine without compromising its accuracy.*

在弹簧控制的端面驱动顶尖中使用含插槽的顶尖端

USING THE CENTER POINTS WITH SLOTS IN FACE DRIVERS OPERATED BY SPRINGS

使用方法：

使用含插槽的顶尖端时，要常检查传动销长度。该长度绝不能比目录中显示的长度低 3mm。这表明在锐磨时，传动销长度最多只能比其原有长度短 3mm。为确保含插槽的顶尖端有效工作，一定要小心确保它不得接触顶尖端支称垫圈的位置（K）。在选择含插槽的顶尖端尺寸时，一定要考虑到尺寸“F”（参见参考页上的表格）。

USING:

When using the center points with slots, always check driving pin lenght. This must never be less than 3 mm of the lenght indicated in the catalogue.

This means that when sharpening, they can be shortened only by 3 mm (E) of their original lenght.

To ensure that the point with slots operates efficiently, care must be taken to ensure that it never comes into contact with level (K) of the point support washer.

The dimension of the center point with slots has to be chosen considering the dimension “F” (see tables on reference pages)

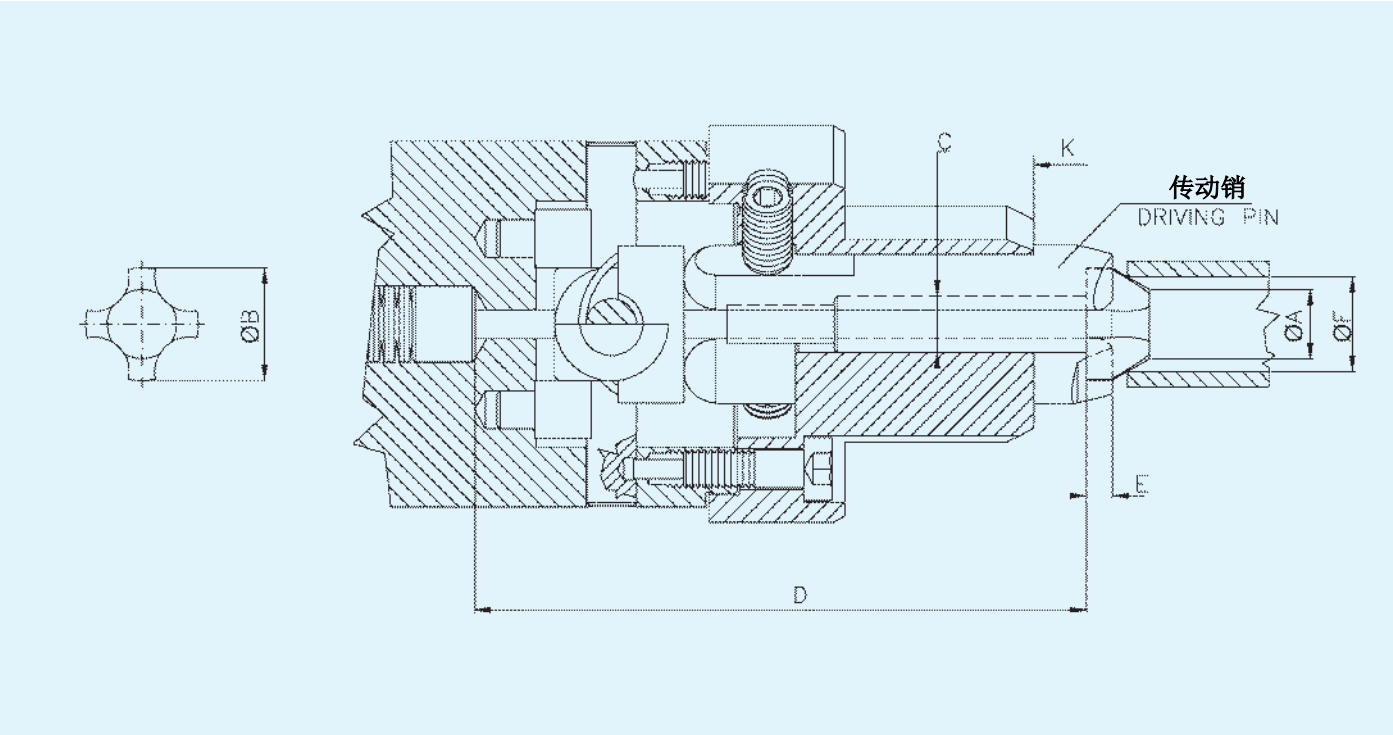

含自定中心夹头整体法兰的紧固端面驱动顶尖

CLAMPING FACE DRIVERS WITH INTEGRAL FLANGE ON SELF-CENTERING CHUCK

软卡爪：

* 首先卡入自定中心夹头的轴向和径向间隙。
1ª OP.: 用三个卡爪夹紧具有合适直径的圆法兰后，加工直径 D。
2ª OP.: 夹紧具有直径 D 的合适环后，加工直径 C。

SOFT JAWS:

** Preliminary operation to take up the axial and radial slack of the self-centering chuck.*
1ª OP.: machine the diameter D after clamping a round flange of suitable diameter in the three jaws.
2ª OP.: Machine the diameter C after clamping the appropriate ring in the diameter D.

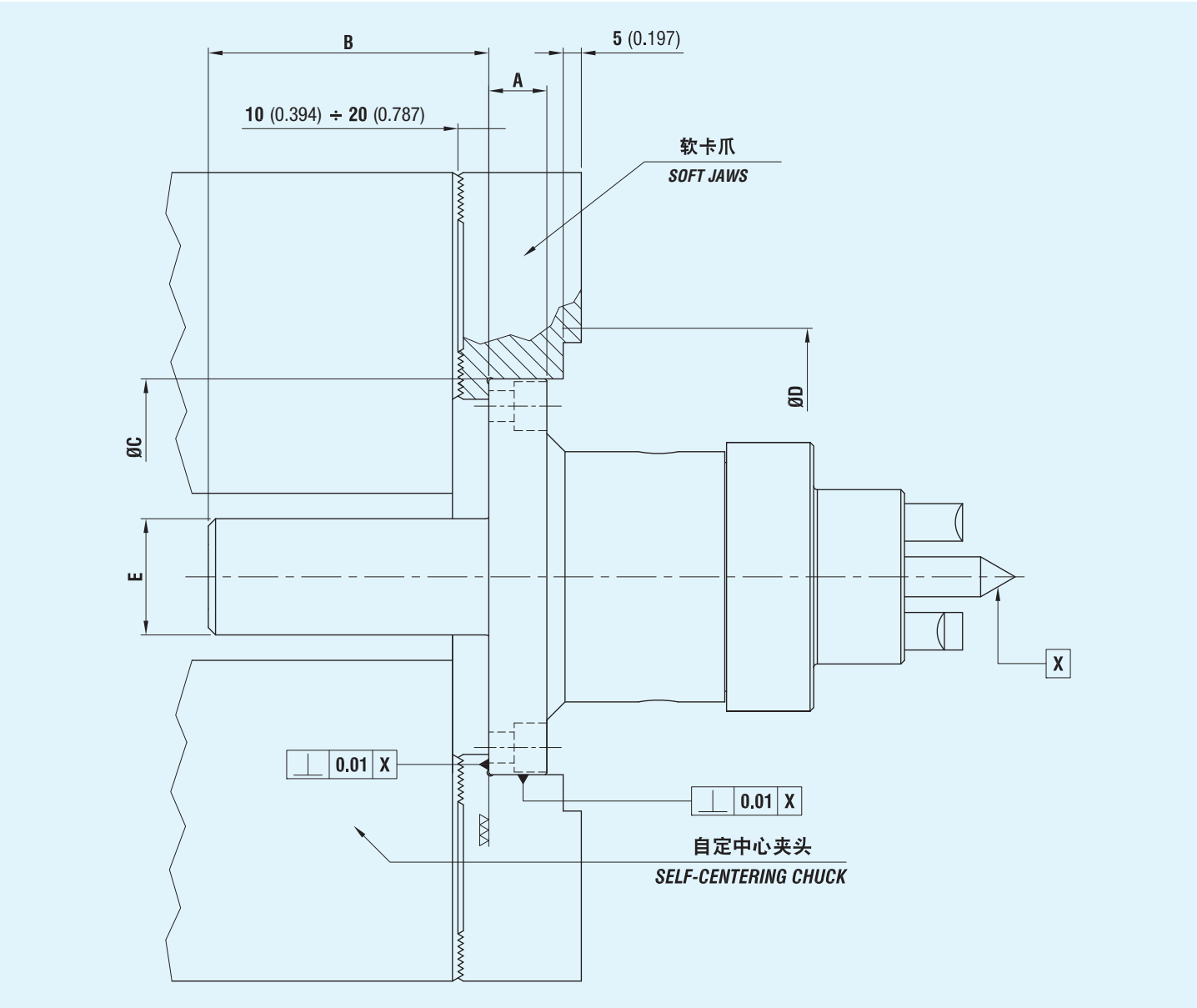

端面驱动顶尖 Face Driver	A	B	Ø C	Ø D	Ø E
6/30. 5/20. 12/50. 15/55. 20/60	16 (0.630)	56 (2.205)	109 (4.291)	160 (6.299)	32 (1.260)
20/70	16 (0.630)	62 (2.441)	109 (4.291)	160 (6.299)	32 (1.260)
45/120	22 (0.866)	108 (4.252)	153 (6.024)	200 (7.874)	32 (1.260)

含定心孔的 FRB 端面驱动顶尖适配器

FRB FACE DRIVER ADAPTORS WITH CENTERING HOLES

磨削和淬火

GROUND AND HARDENED

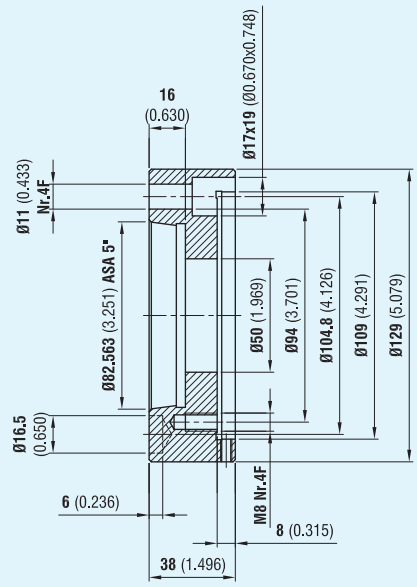

ASA 5" 法兰
ASA 5" flange
代码 - CODE 070700558

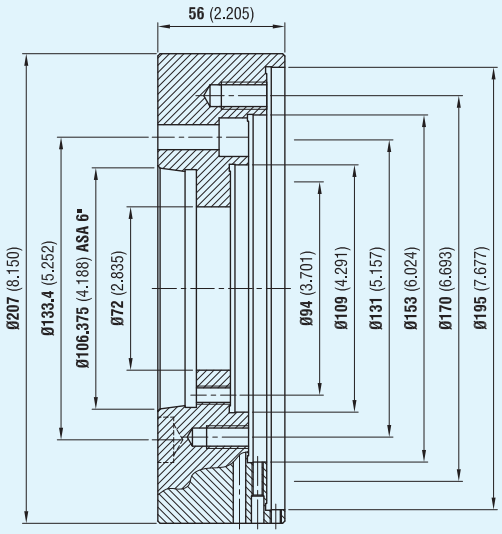

ASA 6" 法兰
ASA 6" flange
代码 - CODE 070700551

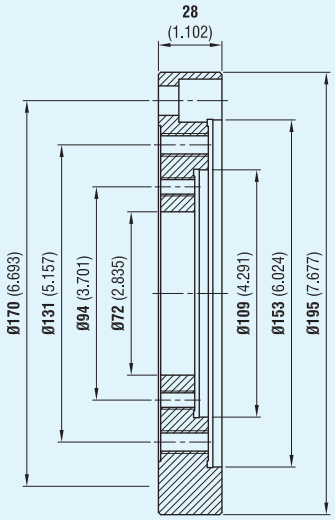

中性平衡法兰
Neutral flange
代码 - CODE 070700550

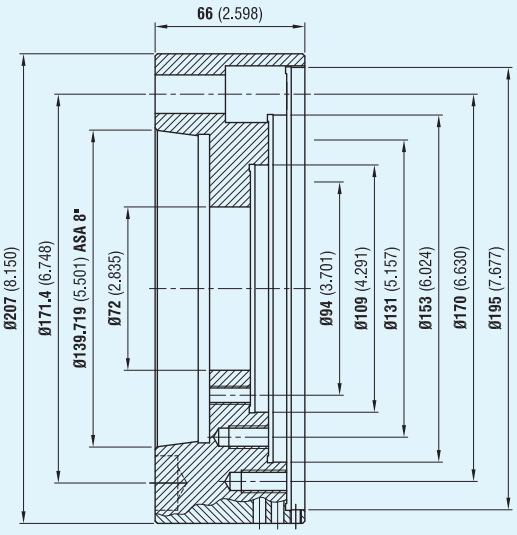

ASA 8" 法兰
ASA 8" flange
代码 - CODE 070700552

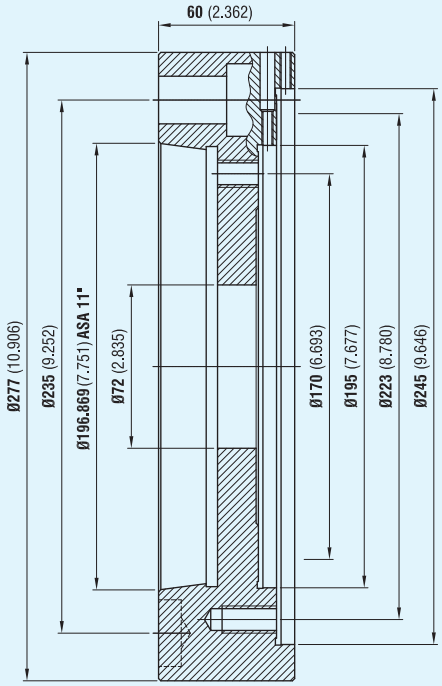

ASA 11" 法兰
ASA 11" flange
代码 - CODE 070700559

有关进一步详情，请联系我方技术室

FOR FURTHER AND MORE DETAILED INFORMATION. CONTACT OUR TECHNICAL OFFICE

端面驱动顶尖 6/30

FACE DRIVER 6/30

特性：

该端面驱动顶尖适合加工直径在 6mm（0.236 英寸）和 30mm（1.181 英寸）之间的轴。也可从端面驱动顶尖侧进行大型工具加工；可在不拆卸其他端面驱动顶尖部件情况下更换顶尖端和传动销。为便于正确使用，轴心须配有规格为 Ø1.5 (0.059) - Ø 5 (0.197)(最大)。

FEATURES:

This face driver is suitable for machining shafts of between 6 (inch 0.236) and 30 (inch 1.181) millimetres in diameter. Machining with large tools can also be carried out from the face driver side; the center point and the driving pins can be replaced without having to remove other face driver components. For a correct use, shafts must have centres from Ø1.5 (0.059) to Ø 5 (0.197) max.

含莫氏锥度配件的端面驱动顶尖 6/30

FACE DRIVER 6/30 WITH MORSE TAPER FITTING

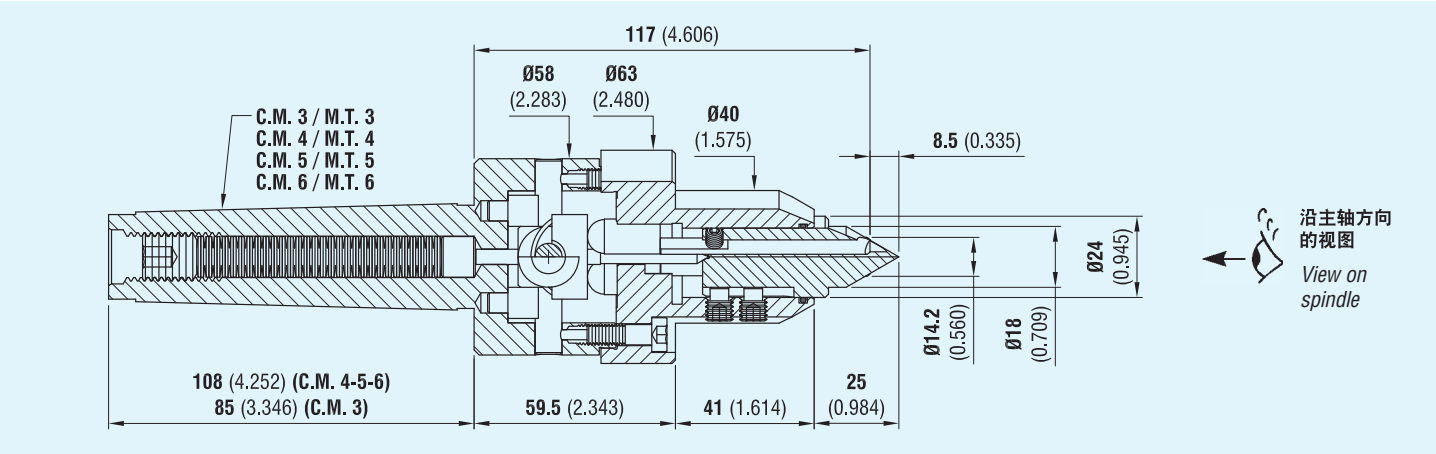

右旋代码 *Code right rotation*	左旋代码 *Code left rotation*	锥度 *Taper*
070752380	070752381	CM3/*MT3*
070752382	070752383	CM4/*MT4*
070752384	070752385	CM5/*MT5*
070752386	070752387	CM6/*MT6*

含整体法兰的端面驱动顶尖 6/30

FACE DRIVER 6/30 WITH INTEGRAL FLANGE

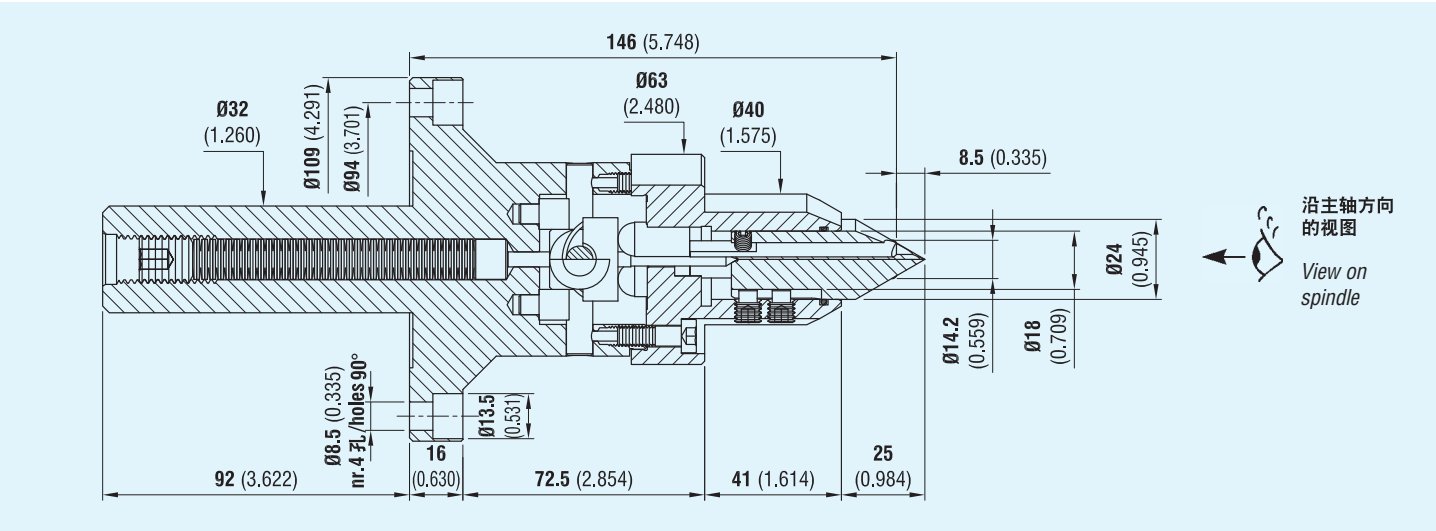

右旋代码 *Code right rotation*	左旋代码 *Code left rotation*
070760048	070760049

端面驱动顶尖 6/30 的备件

SPARE PARTS FOR FACE DRIVER 6/30

备件

6/30 传动销

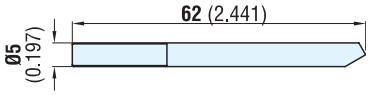

左旋 /left rotation

SPARE PARTS

Driving pins for 6/30

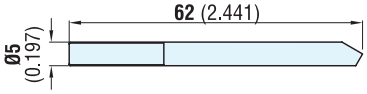

右旋 /right rotation

左旋代码 *Code left rotation*	右旋代码 *Code right rotation*
080845004	080845001

6/30 的低位传动销

Lowered driving pins for 6/30

注：关于这些尺寸，请联系我们的技术部门

WARNING: *contact our technical department for these dimensions*

左旋代码 *Code left rotation*	*Ø A*	*B*
090901007	7 (0.276)	1.4 (0.055)
090901008	8 (0.315)	1.9 (0.075)
090901009	9 (0.354)	2.4 (0.094)
090901010	10 (0.394)	2.9 (0.114)
090901011	11 (0.433)	3.4 (0.134)
090901012	12 (0.472)	3.9 (0.154)

右旋代码 *Code right rotation*	*Ø A*	*B*
090900007	7 (0.276)	1.4 (0.055)
090900008	8 (0.315)	1.9 (0.075)
090900009	9 (0.354)	2.4 (0.094)
090900010	10 (0.394)	2.9 (0.114)
090900011	11 (0.433)	3.4 (0.134)
090900012	12 (0.472)	3.9 (0.154)

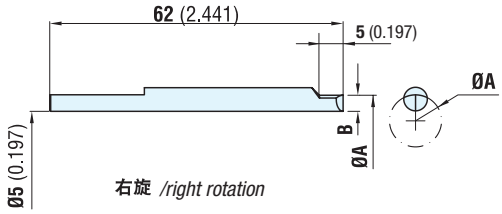

右旋 /right rotation

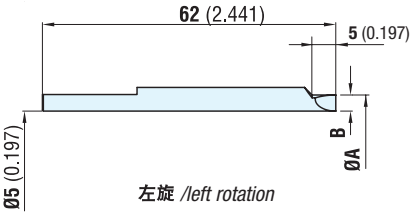

左旋 /left rotation

6/30 的顶尖端支撑传动销

Center point supporting driving pins for 6/30

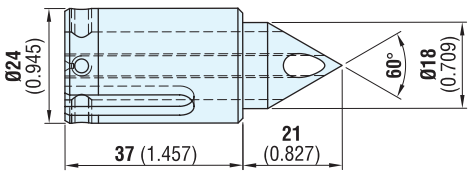

代码 *Code*
072102762

注释 *NOTES*

端面驱动顶尖 12/50

FACE DRIVER 12/50

特性：

该端面驱动顶尖适合加工直径在 12mm（0.472 英寸）和 50mm（1.969 英寸）之间的轴。也可从端面驱动顶尖侧进行大型工具加工；可在不拆卸其他端面驱动顶尖部件情况下更换顶尖端和传动销。

FEATURES:

This face driver is suitable for machining shafts of between 12 (inch 0.472) and 50 (inch 1.969) millimetres in diameter. Machining with large tools can also be carried out from the face driver side; the center point and the driving pins can be replaced without having to remove other face driver components.

含莫氏锥度配件的端面驱动顶尖 12/50

FACE DRIVER 12/50 WITH MORSE TAPER FITTING

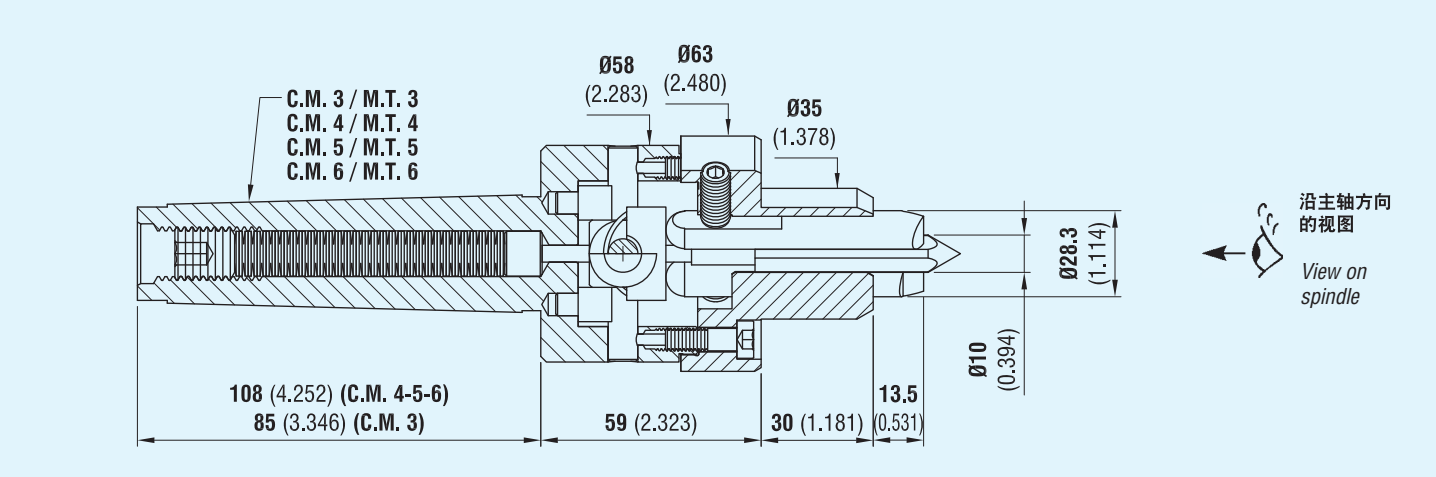

右旋代码 *Code right rotation*	左旋代码 *Code left rotation*	锥度 *Taper*
070752033	070752034	CM3/*MT3*
070752141	070752142	CM4/*MT4*
070752251	070752252	CM5/*MT5*
070752361	070752362	CM6 /*MT6*

含整体法兰的端面驱动顶尖 12/50

FACE DRIVER 12/50 WITH INTEGRAL FLANGE

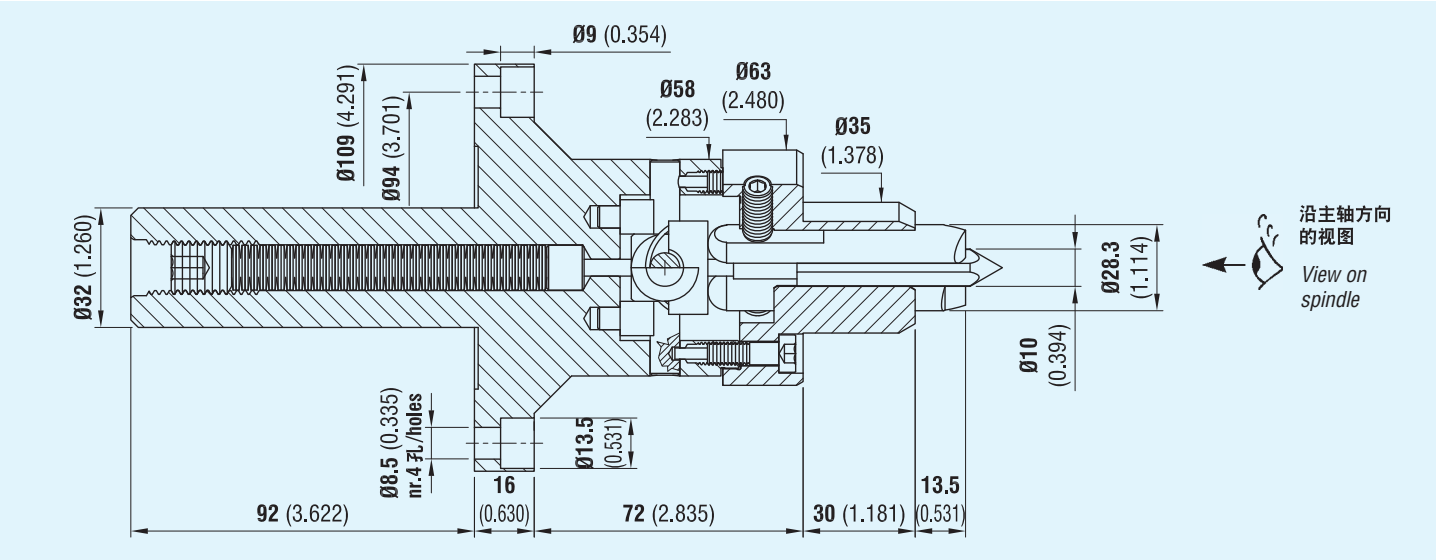

右旋代码 *Code right rotation*	左旋代码 *Code left rotation*
070760018	070760009

端面驱动顶尖 12/50 的备件

RICAMBI PER TRASCINATORE 12/50

备件

12/50 传动销

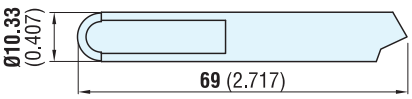

左旋 /left rotation

SPARE PARTS

Driving pins for 12/50

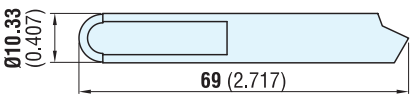

右旋 /right rotation

左旋代码 Code left rotation	右旋代码 Code right rotation
080809002	080809003

12/50 低位传动销

Lowered driving pins for 12/50

注：关于这些尺寸，请联系我们的技术部门

WARNING: *contact our technical department for these dimensions*

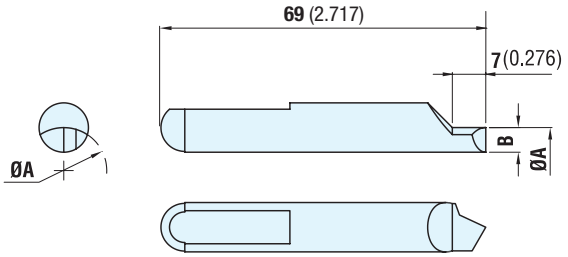

左旋代码 Code left rotation	Ø A	B
090909012	12 (0.472)	2.1 (0.083)
090909013	13 (0.512)	2.6 (0.102)
090909014	14 (0.551)	3.1 (0.122)
090909015	15 (0.591)	3.6 (0.142)
090909016	16 (0.630)	4.1 (0.161)
090909017	17 (0.669)	4.6 (0.181)
090909018	18 (0.709)	5.1 (0.201)
090909019	19 (0.748)	5.6 (0.220)
090909020	20 (0.787)	6.1 (0.240)
090909021	21 (0.827)	6.6 (0.260)
090909022	22 (0.866)	7.1 (0.280)
090909023	23 (0.906)	7.6 (0.299)
090909024	24 (0.945)	8.1 (0.319)
090909025	25 (0.984)	8.6 (0.339)

右旋代码 Code right rotation	Ø A	B
090909112	12 (0.472)	2.1 (0.083)
090909113	13 (0.512)	2.6 (0.102)
090909114	14 (0.551)	3.1 (0.122)
090909115	15 (0.591)	3.6 (0.142)
090909116	16 (0.630)	4.1 (0.161)
090909117	17 (0.669)	4.6 (0.181)
090909118	18 (0.709)	5.1 (0.201)
090909119	19 (0.748)	5.6 (0.220)
090909120	20 (0.787)	6.1 (0.240)
090909121	21 (0.827)	6.6 (0.260)
090909122	22 (0.866)	7.1 (0.280)
090909123	23 (0.906)	7.6 (0.299)
090909124	24 (0.945)	8.1 (0.319)
090909125	25 (0.984)	8.6 (0.339)

12/50 顶尖端

Center point for 12/50

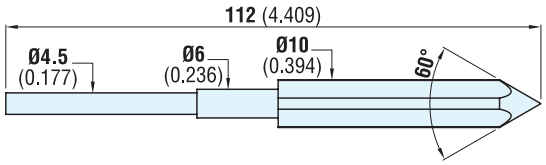

代码 Code
072102741

含插槽的 12/50 顶尖端

（适于大型顶尖或孔）

Center points with slots for 12/50

(for large centers or holes)

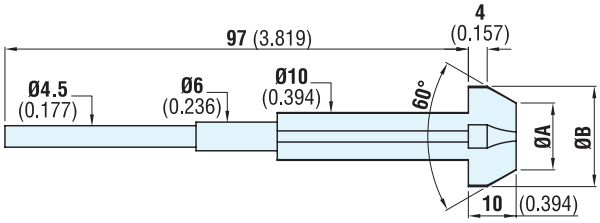

含插槽的顶尖端代码 Code centre points with slots	含插槽的顶尖端尺寸 Dimensions points with slots		适于顶尖或“F”孔 For centers or “F” holes	
	Ø A	Ø B	（最小）/ from Ø	（最大）/ to Ø
171711009	5 (0.197)	12 (0.472)	7.5 (0.295)	10.5 (0.413)
171711010	8 (0.315)	15 (0.591)	10.5 (0.413)	13.5 (0.531)
171711011	11 (0.433)	18 (0.709)	13.5 (0.531)	16.5 (0.650)
171711012	14 (0.551)	21 (0.827)	16.5 (0.650)	19.5 (0.768)
171711013	17 (0.669)	24 (0.945)	19.5 (0.768)	22.5 (0.886)
171711014	20 (0.787)	27 (1.063)	22.5 (0.886)	25.5 (1.004)

有关操作说明，请参见第 41 页

For operating instructions, see page. 41

端面驱动顶尖 15/55

FACE DRIVER 15/55

特性：

该端面驱动顶尖适合加工直径在 15mm（0.591 英寸）和 55mm（2.165 英寸）之间的轴。也可从端面驱动顶尖侧进行大型工具加工；可在不拆卸其他端面驱动顶尖部件情况下更换顶尖端和传动销。

FEATURES:

This face driver is suitable for machining shafts of between 15 (inch 0.591) and 55 (inch 2.165) millimetres in diameter. Machining with large tools can also be carried out from the face driver side; the center point and the driving pins can be replaced without having to remove other face driver components.

含莫氏锥度配件的端面驱动顶尖 15/55

FACE DRIVER 15/55 WITH MORSE TAPER FITTING

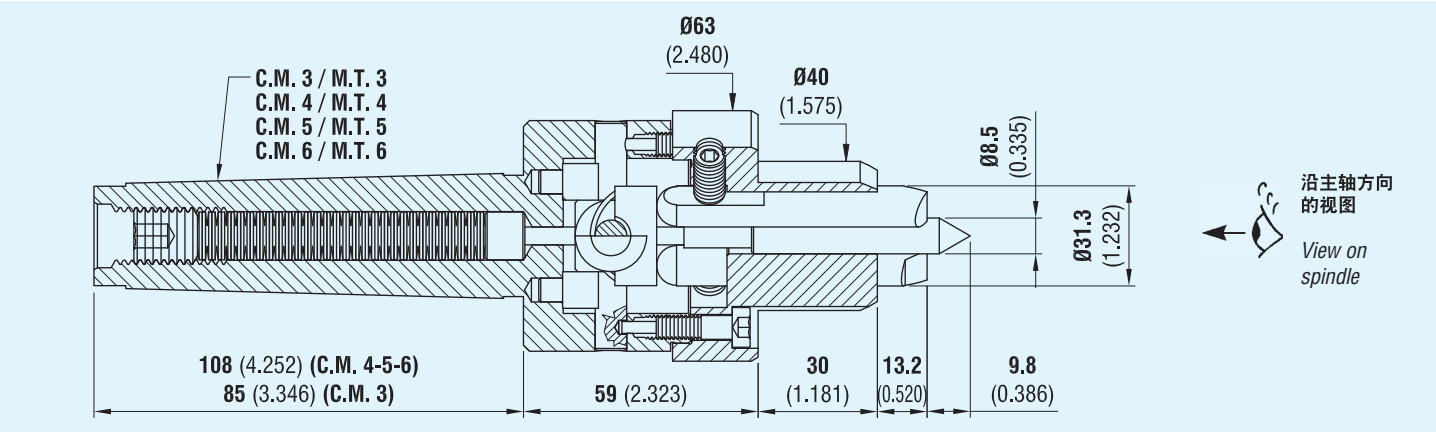

右旋代码 *Code right rotation*	左旋代码 *Code left rotation*	锥度 *Taper*
070752390	070752391	CM3/MT3
070752392	070752393	CM4/MT4
070752394	070752395	CM5/MT5
070752396	070752397	CM6/MT6

含整体法兰的端面驱动顶尖 15/55

FACE DRIVER 15/55 WITH INTEGRAL FLANGE

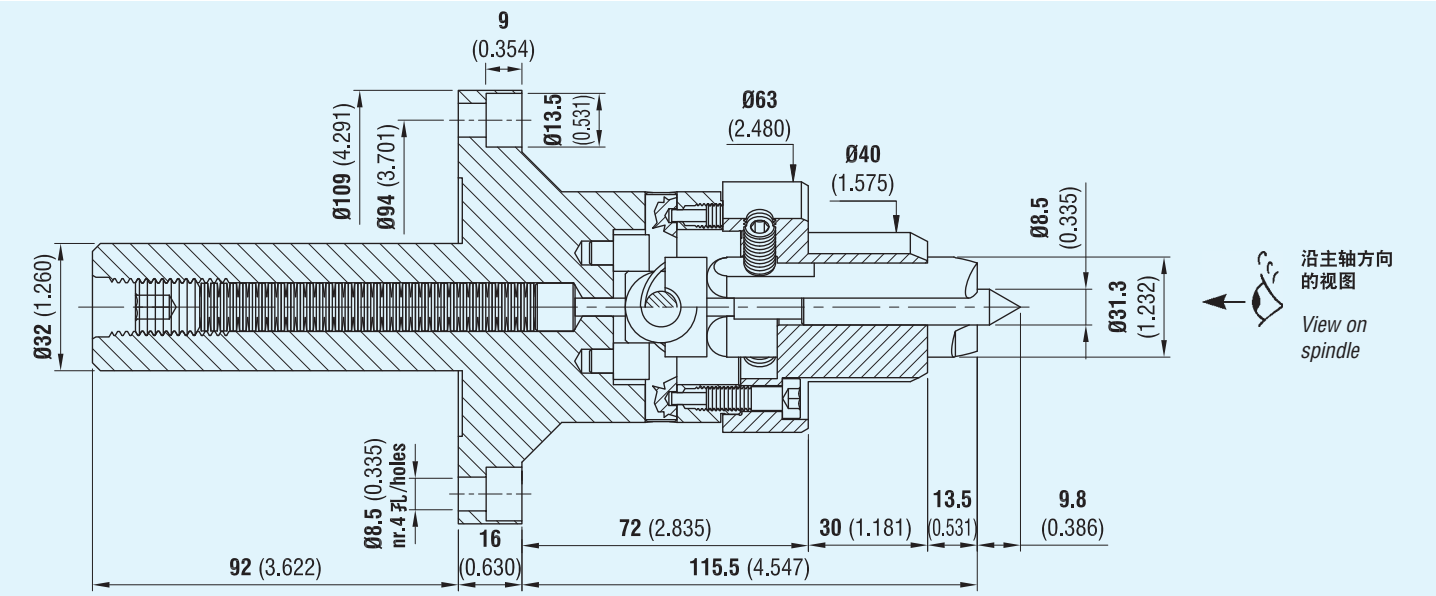

右旋代码 *Code right rotation*	左旋代码 *Code left rotation*
070752406	070752407

端面驱动顶尖 15/55 的备件

SPARE PARTS FOR FACE DRIVER 15/55

备件

15/55 传动销

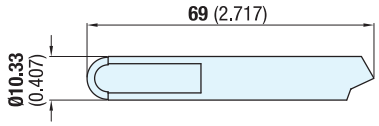

左旋 /*left rotation*

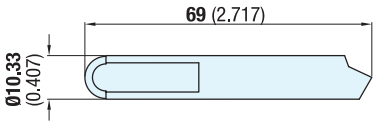

右旋 /*right rotation*

SPARE PARTS

Driving pins for 15/55

左旋代码 *Code left rotation*	右旋代码 *Code right rotation*
080809002	080809003

15/55 低位传动销

注：关于这些尺寸，请联系我们的技术部门

WARNING: *contact our technical department for these dimensions*

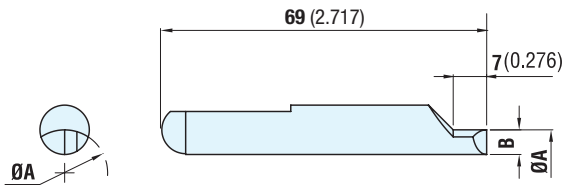

Lowered driving pins for 15/55

左旋代码 *Code left rotation*	*Ø A*	*B*
090909012	15 (0.591)	2.1 (0.083)
090909013	16 (0.630)	2.6 (0.102)
090909014	17 (0.669)	3.1 (0.122)
090909015	18 (0.709)	3.6 (0.142)
090909016	19 (0.748)	4.1 (0.161)
090909017	20 (0.787)	4.6 (0.181)
090909018	21 (0.827)	5.1 (0.201)
090909019	22 (0.866)	5.6 (0.220)
090909020	23 (0.906)	6.1 (0.240)
090909021	24 (0.945)	6.6 (0.260)
090909022	25 (0.984)	7.1 (0.280)
090909023	26 (1.024)	7.6 (0.299)
090909024	27 (1.063)	8.1 (0.319)
090909025	28 (1.102)	8.6 (0.339)

右旋代码 *Code right rotation*	*Ø A*	*B*
090909112	15 (0.591)	2.1 (0.083)
090909113	16 (0.630)	2.6 (0.102)
090909114	17 (0.669)	3.1 (0.122)
090909115	18 (0.709)	3.6 (0.142)
090909116	19 (0.748)	4.1 (0.161)
090909117	20 (0.787)	4.6 (0.181)
090909118	21 (0.827)	5.1 (0.201)
090909119	22 (0.866)	5.6 (0.220)
090909120	23 (0.906)	6.1 (0.240)
090909121	24 (0.945)	6.6 (0.260)
090909122	25 (0.984)	7.1 (0.280)
090909123	26 (1.024)	7.6 (0.299)
090909124	27 (1.063)	8.1 (0.319)
090909125	28 (1.102)	8.6 (0.339)

15/55 顶尖端

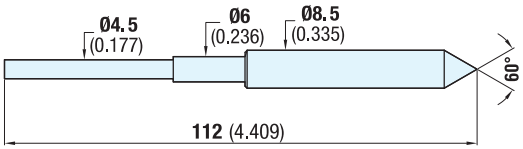

Center point for 15/55

代码 *Code*
072102766

含插槽的 15/55 顶尖端

（适于大型顶尖或孔）

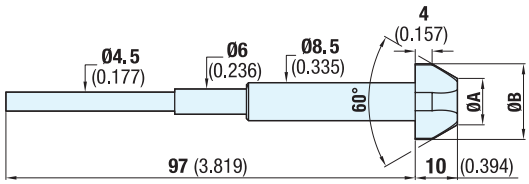

Center points with slots for 15/55

(for large centers or holes)

含插槽的顶尖端代码 *Code centre points with slots*	含插槽的顶尖端尺寸 *Dimensions points with slots*		适于顶尖或“F”孔 *For centers or “F” holes*	
	Ø A	*Ø B*	*from / dal Ø*	*to / al Ø*
171711015	5 (0.197)	12 (0.472)	7.5 (0.295)	10.5 (0.413)
171711016	8 (0.315)	15 (0.591)	10.5 (0.413)	13.5 (0.531)
171711017	11 (0.433)	18 (0.709)	13.5 (0.531)	16.5 (0.650)
171711019	14 (0.551)	21 (0.827)	16.5 (0.650)	19.5 (0.768)
171711020	17 (0.669)	24 (0.945)	19.5 (0.768)	22.5 (0.886)
171711022	20 (0.787)	27 (1.063)	22.5 (0.886)	25.5 (1.004)

有关操作说明，请参见第 41 页

For operating instructions, see page. 41

端面驱动顶尖 20/60

FACE DRIVER 20/60

特性：

该端面驱动顶尖适合加工直径在 20mm（0.787 英寸）和 60mm（2.362 英寸）之间的轴。也可从端面驱动顶尖侧进行大型工具加工；可在不拆卸其他端面驱动顶尖部件情况下更换顶尖端和传动销。

FEATURES:

This face driver is suitable for machining shafts of between 20 (inch 0.787) and 60 (inch 2.362) millimetres in diameter. Machining with large tools can also be carried out from the face driver side; the center point and the driving pins can be replaced without having to remove other face driver components.

含莫氏锥度配件的端面驱动顶尖 20/60

FACE DRIVER 20/60 WITH MORSE TAPER FITTING

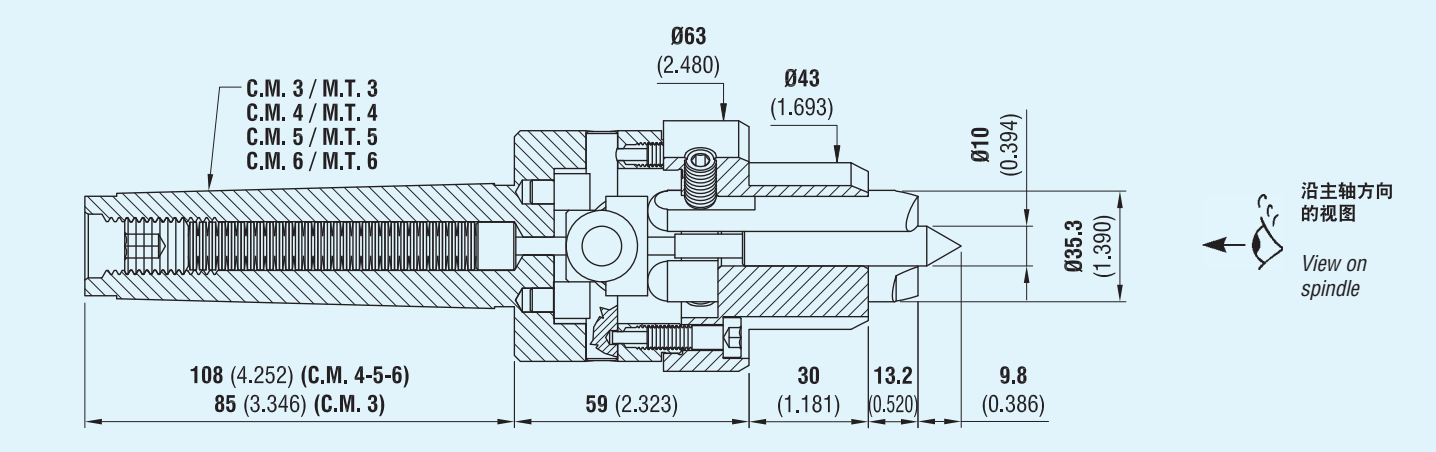

右旋代码 *Code right rotation*	左旋代码 *Code left rotation*	锥度 *Taper*
070752398	070752399	CM3/*MT3*
070752400	070752401	CM4/*MT4*
070752402	070752403	CM5/*MT5*
070752404	070752405	CM6/*MT6*

含整体法兰的端面驱动顶尖 20/60

FACE DRIVER 20/60 WITH INTEGRAL FLANGE

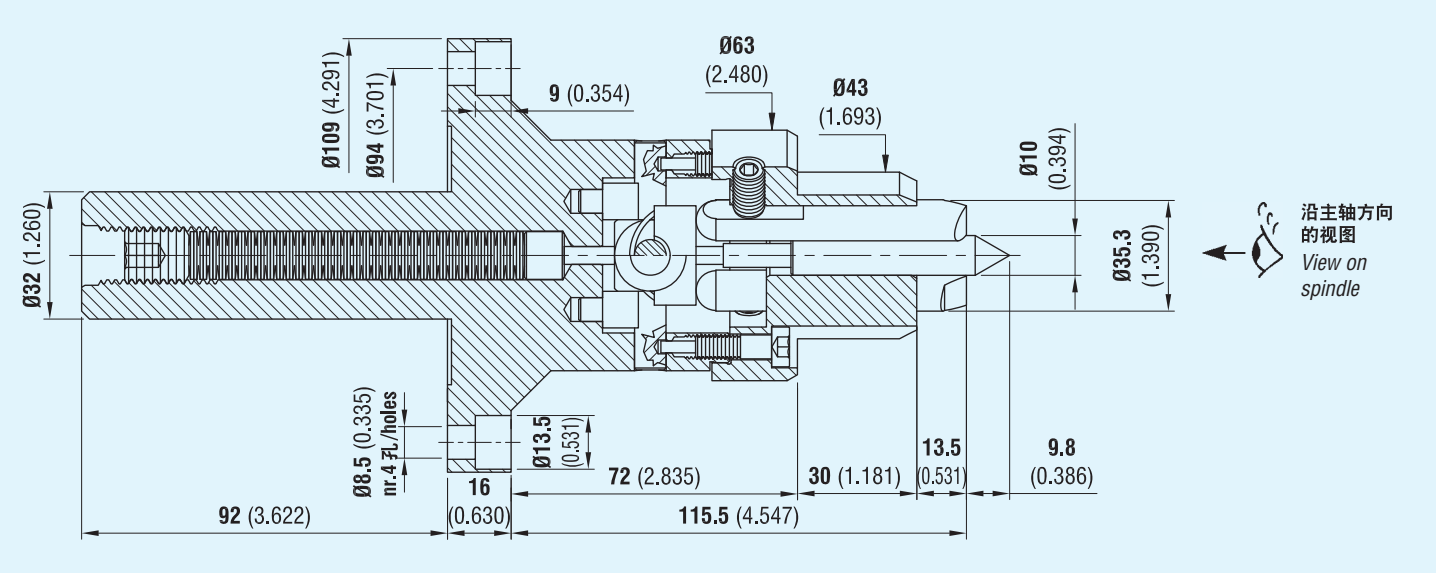

右旋代码 *Code right rotation*	左旋代码 *Code left rotation*
070752408	070752409

端面驱动顶尖 20/60 的备件

SPARE PARTS FOR FACE DRIVER 20/60

备件

20/60 传动销

SPARE PARTS

Driving pins for 20/60

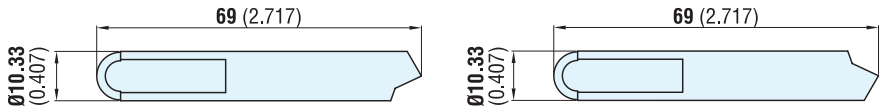

左旋代码 *Code left rotation*	右旋代码 *Code right rotation*
080809002	080809003

20/60 低位传动销

Lowered driving pins for 20/60

注：关于这些尺寸，请联系我们的技术部门

WARNING: *contact our technical department for these dimensions*

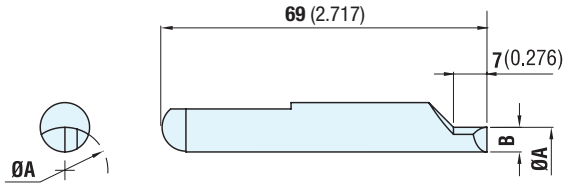

左旋代码 *Code left rotation*	*Ø A*	*B*
090909012	19 (0.748)	2.1 (0.083)
090909013	20 (0.787)	2.6 (0.102)
090909014	21 (0.827)	3.1 (0.122)
090909015	22 (0.866)	3.6 (0.142)
090909016	23 (0.906)	4.1 (0.161)
090909017	24 (0.945)	4.6 (0.181)
090909018	25 (0.984)	5.1 (0.201)
090909019	26 (1.024)	5.6 (0.220)
090909020	27 (1.063)	6.1 (0.240)
090909021	28 (1.102)	6.6 (0.260)
090909022	29 (1.142)	7.1 (0.280)
090909023	30 (1.181)	7.6 (0.299)
090909024	31 (1.220)	8.1 (0.319)
090909025	32 (1.260)	8.6 (0.339)

右旋代码 *Code right rotation*	*Ø A*	*B*
090909112	19 (0.748)	2.1 (0.083)
090909113	20 (0.787)	2.6 (0.102)
090909114	21 (0.827)	3.1 (0.122)
090909115	22 (0.866)	3.6 (0.142)
090909116	23 (0.906)	4.1 (0.161)
090909117	24 (0.945)	4.6 (0.181)
090909118	25 (0.984)	5.1 (0.201)
090909119	26 (1.024)	5.6 (0.220)
090909120	27 (1.063)	6.1 (0.240)
090909121	28 (1.102)	6.6 (0.260)
090909122	29 (1.142)	7.1 (0.280)
090909123	30 (1.181)	7.6 (0.299)
090909124	31 (1.220)	8.1 (0.319)
090909125	32 (1.260)	8.6 (0.339)

20/60 顶尖端

Center point for 20/60

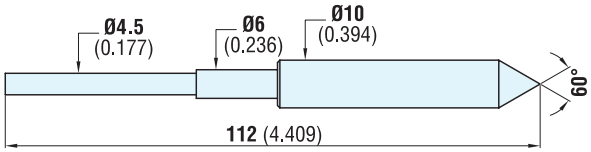

代码 *Code*
072102767

含插槽的 20/60 顶尖端

（适于大型顶尖或孔）

Center points with slots for 20/60

(for large centers or holes)

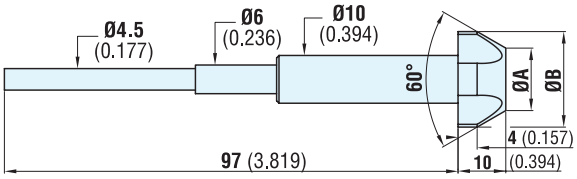

含插槽的顶尖端代码 *Code centre points with slots*	含插槽的顶尖端尺寸 *Dimensions points with slots*		适于顶尖或“F”孔 *For centers or “F” holes*	
	Ø A	*Ø B*		
171712018	5 (0.197)	12 (0.472)	7.5 (0.295)	10.5 (0.413)
171712019	8 (0.315)	15 (0.591)	10.5 (0.413)	13.5 (0.531)
171712020	11 (0.433)	18 (0.709)	13.5 (0.531)	16.5 (0.650)
171712022	14 (0.551)	21 (0.827)	16.5 (0.650)	19.5 (0.768)
171712024	17 (0.669)	24 (0.945)	19.5 (0.768)	22.5 (0.886)
171712026	20 (0.787)	27 (1.063)	22.5 (0.886)	25.5 (1.004)
171712027	23 (0.906)	30 (1.181)	25.5 (1.004)	28.5 (1.122)

有关操作说明，请参见第 41 页

For operating instructions, see page. 41

端面驱动顶尖 20/70

FACE DRIVER 20/70

特性：

该端面驱动顶尖适合加工直径在 20mm（0.787 英寸）和 70mm（2.756 英寸）之间的轴。
也可从端面驱动顶尖侧进行大型工具加工；可在不拆卸其他端面驱动顶尖部件情况下更换顶尖端和传动销。

FEATURES:

This face driver is suitable for machining shafts of between 20 (inch 0.787) and 70 (inch 2.756) millimetres in diameter.
Machining with large tools can also be carried out from the face driver side; the center point and the driving pins can be replaced without having to remove other face driver components.

含莫氏锥度配件的端面驱动顶尖 20/70

FACE DRIVER 20/70 WITH MORSE TAPER FITTING

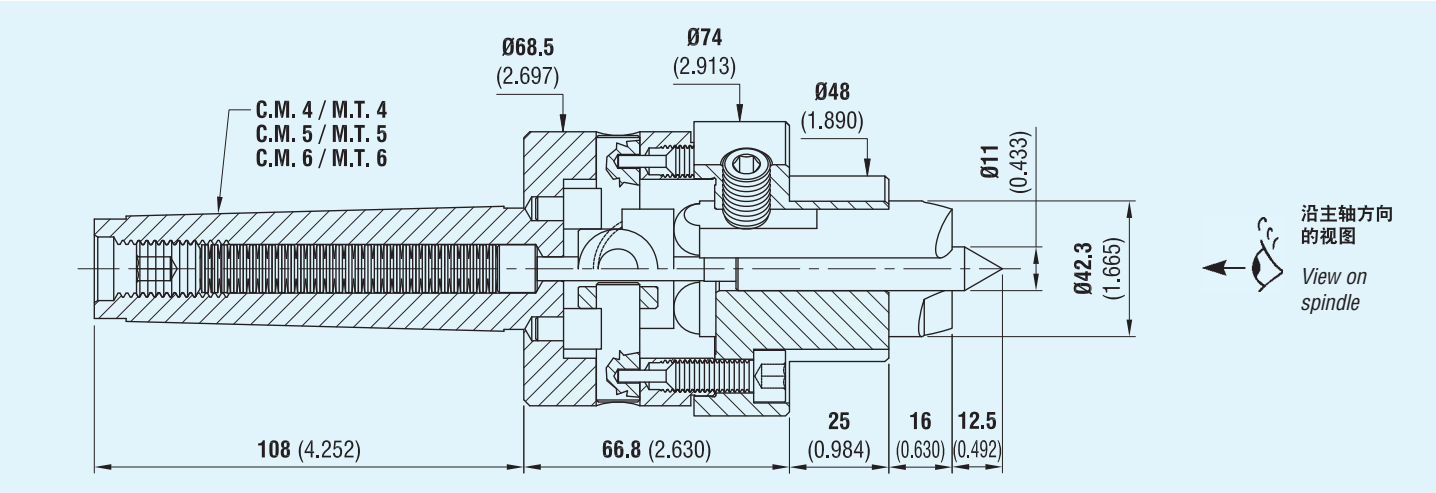

右旋代码 *Code right rotation*	左旋代码 *Code left rotation*	锥度 *Taper*
070752365	070752366	CM4/*MT4*
070752367	070752368	CM5/*MT5*
070752369	070752370	CM6/*MT6*

含整体法兰的端面驱动顶尖 20/70

FACE DRIVER 20/70 WITH INTEGRAL FLANGE

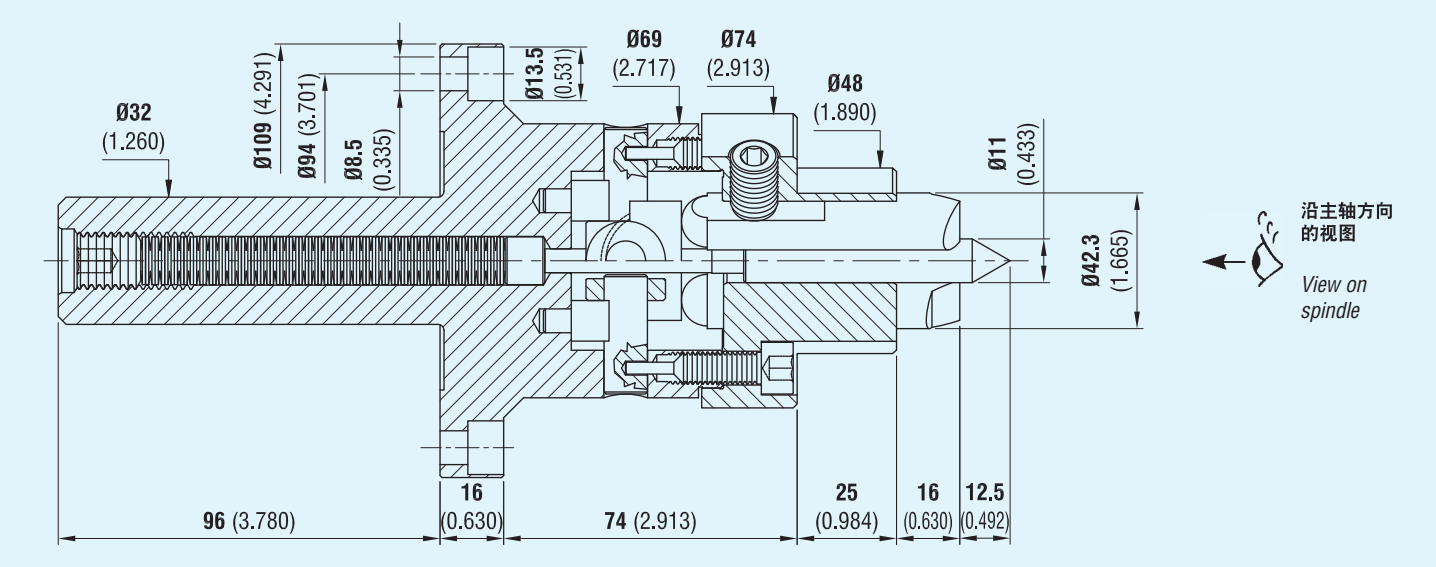

右旋代码 *Code right rotation*	左旋代码 *Code left rotation*
070760030	070760028

端面驱动顶尖 20/70 的备件

SPARE PARTS FOR FACE DRIVER 20/70

备件

20/70 传动销

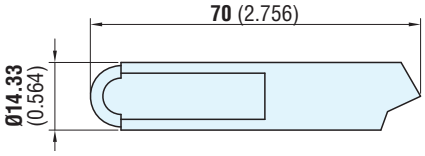

左旋 /*left rotation*

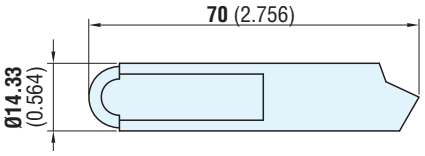

右旋 /*right rotation*

SPARE PARTS

Driving pins for 20/70

左旋代码 *Code left rotation*	右旋代码 *Code right rotation*
080809004	080809005

20/70 低位传动销

注：关于这些尺寸，请联系我们的技术部门

WARNING: *contact our technical department for these dimensions*

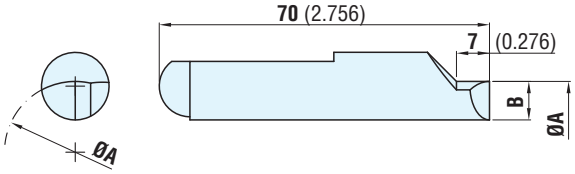

Lowered driving pins for 20/70

左旋代码 *Code left rotation*	*Ø A*	*B*
090909219	19 (0.748)	2.7 (0.106)
090909220	20 (0.787)	3.2 (0.126)
090909221	21 (0.827)	3.7 (0.146)
090909222	22 (0.866)	4.2 (0.165)
090909223	23 (0.906)	4.7 (0.185)
090909224	24 (0.945)	5.2 (0.205)
090909225	25 (0.984)	5.7 (0.224)
090909226	26 (1.024)	6.2 (0.244)
090909227	27 (1.063)	6.7 (0.264)
090909228	28 (1.102)	7.2 (0.283)
090909229	29 (1.142)	7.7 (0.303)
090909230	30 (1.181)	8.2 (0.323)
090909231	31 (1.220)	8.7 (0.343)
090909232	32 (1.260)	9.2 (0.362)
090909233	33 (1.299)	9.7 (0.382)
090909234	34 (1.339)	10.2 (0.402)
090909235	35 (1.378)	10.7 (0.421)
090909236	36 (1.417)	11.2 (0.441)

右旋代码 *Code right rotation*	*Ø A*	*B*
090909319	19 (0.748)	2.7 (0.106)
090909320	20 (0.787)	3.2 (0.126)
090909321	21 (0.827)	3.7 (0.146)
090909322	22 (0.866)	4.2 (0.165)
090909323	23 (0.906)	4.7 (0.185)
090909324	24 (0.945)	5.2 (0.205)
090909325	25 (0.984)	5.7 (0.224)
090909326	26 (1.024)	6.2 (0.244)
090909327	27 (1.063)	6.7 (0.264)
090909328	28 (1.102)	7.2 (0.283)
090909329	29 (1.142)	7.7 (0.303)
090909330	30 (1.181)	8.2 (0.323)
090909331	31 (1.220)	8.7 (0.343)
090909332	32 (1.260)	9.2 (0.362)
090909333	33 (1.299)	9.7 (0.382)
090909334	34 (1.339)	10.2 (0.402)
090909335	35 (1.378)	10.7 (0.421)
090909336	36 (1.417)	11.2 (0.441)

20/70 顶尖端

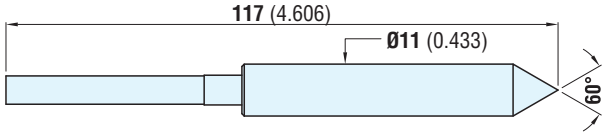

Center point for 20/70

代码 *Code*
072102756

含插槽的 20/70 顶尖端

（适于大型顶尖或孔）

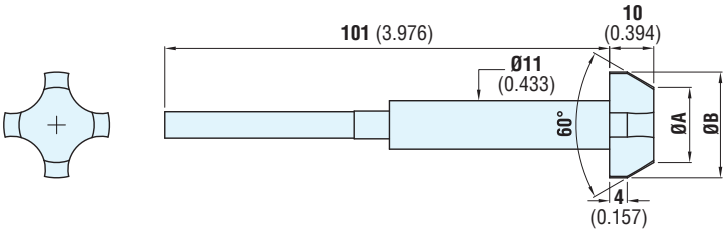

Center points with slots for 20/70

(for large centers or holes)

含插槽的顶尖端代码 *Code centre points with slots*	含插槽的顶尖端尺寸 *Dimensions points with slots*		适于顶尖或“F”孔 *For centers or “F” holes*	
	Ø A	*Ø B*	（最小）/ *from Ø*	（最大）/ *to Ø*
171712010	8 (0.315)	15 (0.591)	10.5 (0.413)	13.5 (0.531)
171712011	11 (0.433)	18 (0.709)	13.5 (0.531)	16.5 (0.650)
171712012	14 (0.551)	21 (0.827)	16.5 (0.650)	19.5 (0.768)
171712013	17 (0.669)	24 (0.945)	19.5 (0.768)	22.5 (0.886)
171712014	20 (0.787)	27 (1.063)	22.5 (0.886)	25.5 (1.004)
171712015	23 (0.906)	30 (1.181)	25.5 (1.004)	28.5 (1.122)
171712016	26 (1.024)	33 (1.299)		
171712017	29 (1.142)	36 (1.417)		

有关操作说明，请参见第 41 页

For operating instructions, see page. 41

端面驱动顶尖 45/120

FACE DRIVER 45/120

特性：

该端面驱动顶尖适合加工直径在 45mm（1.772 英寸）和 120mm（4.724 英寸）之间的轴。
也可从端面驱动顶尖侧进行大型工具加工；可在不拆卸其他端面驱动顶尖部件情况下更换顶尖端和传动销。

FEATURES:

This face driver is suitable for machining shafts of between 45 (inch 1.772) and 120 (inch 4.724) millimetres in diameter. Machining with large tools can also be carried out from the face driver side; the center point and the driving pins can be replaced without having to remove other face driver components.

含莫氏锥度配件的端面驱动顶尖 45/120

FACE DRIVER 45/120 WITH MORSE TAPER FITTING

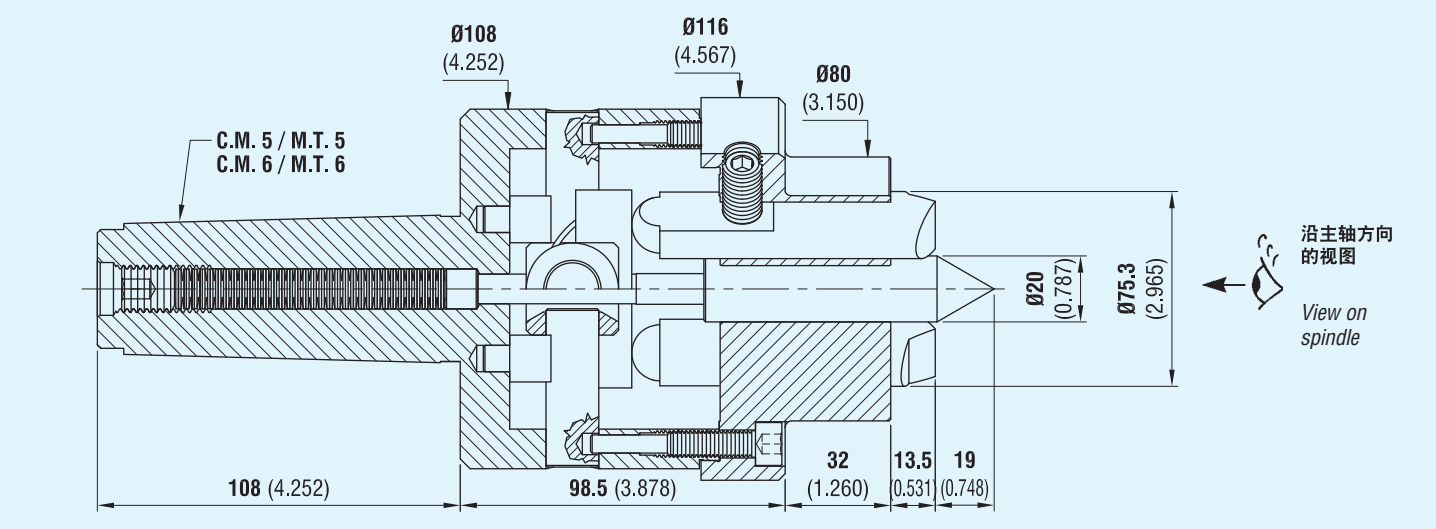

右旋代码 *Code right rotation*	左旋代码 *Code left rotation*	锥度 *Taper*
070750756	070750755	CM5/*MT5*
070751066	070751065	CM6/*MT6*

含整体法兰的端面驱动顶尖 45/120

FACE DRIVER 45/120 WITH INTEGRAL FLANGE

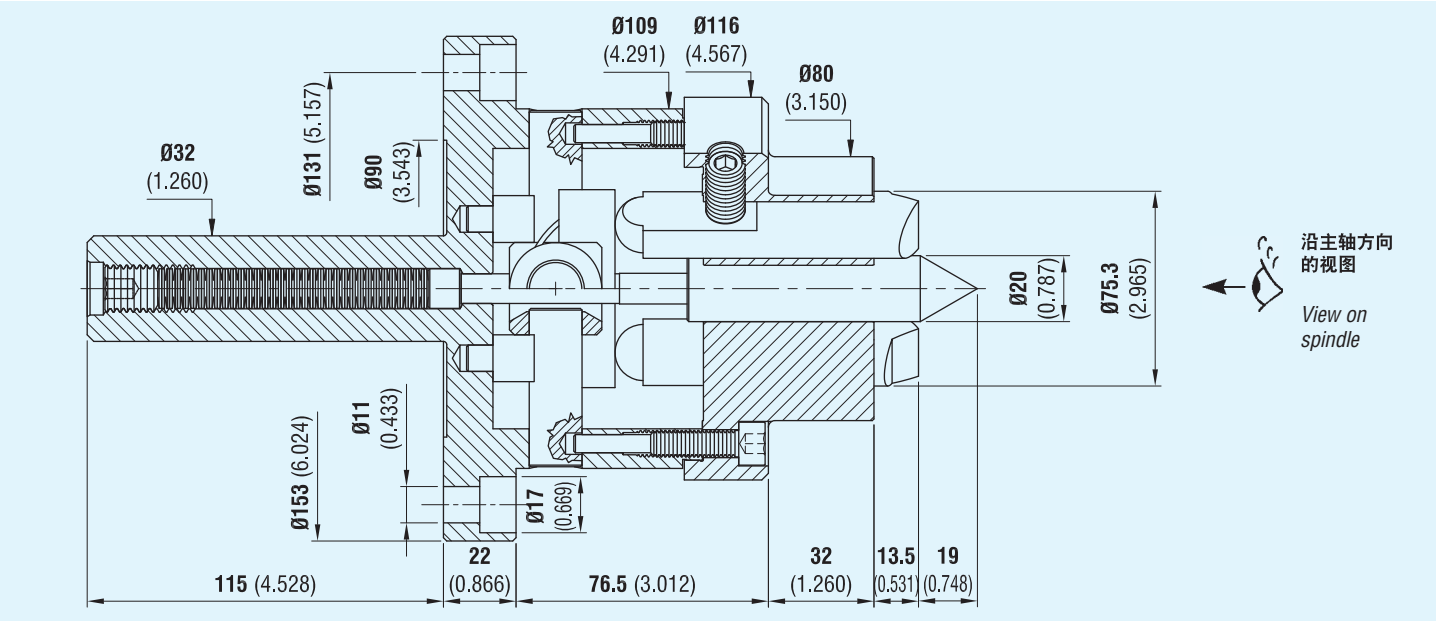

右旋代码 *Code right rotation*	左旋代码 *Code left rotation*
070760034	070760032

端面驱动顶尖 45/120 的备件

SPARE PARTS FOR FACE DRIVER 45/120

备件

45/120 传动销

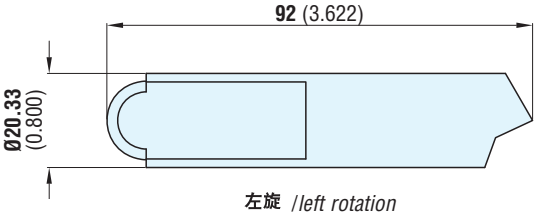

SPARE PARTS

Driving pins for 45/120

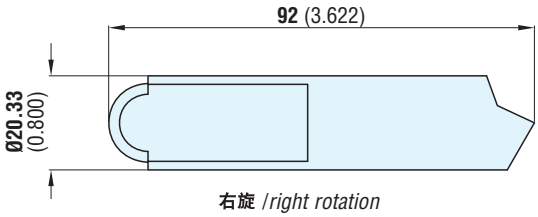

左旋代码 *Code left rotation*
080845014

右旋代码 *Code right rotation*
080845015

45/120 低位传动销

注：关于这些尺寸，请联系我们的技术部门

WARNING: *contact our technical department for these dimensions*

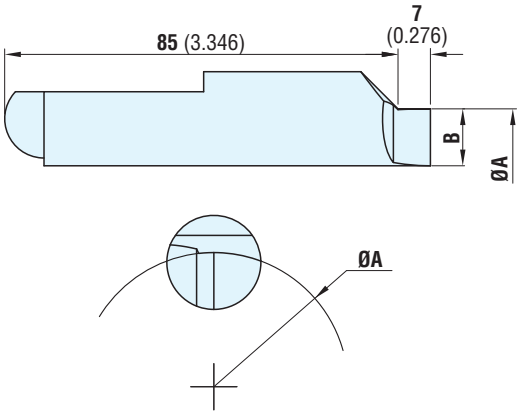

Lowered driving pins for 45/120

左旋代码 *Code left rotation*	*Ø A*	*B*
090945244	44 (1.732)	4.8 (0.189)
090945245	45 (1.772)	5.3 (0.209)
090945246	46 (1.811)	5.8 (0.228)
090945247	47 (1.850)	6.3 (0.248)
090945248	48 (1.890)	6.8 (0.268)
090945249	49 (1.929)	7.3 (0.287)
090945250	50 (1.969)	7.8 (0.307)
090945251	51 (2.008)	8.3 (0.327)
090945252	52 (2.047)	8.8 (0.346)
090945253	53 (2.087)	9.3 (0.366)
090945254	54 (2.126)	9.8 (0.386)
090945255	55 (2.165)	10.3 (0.406)
090945256	56 (2.205)	10.8 (0.425)
090945257	57 (2.244)	11.3 (0.445)
090945258	58 (2.283)	11.8 (0.465)
090945259	59 (2.323)	12.3 (0.484)
090945260	60 (2.362)	12.8 (0.504)
090945261	61 (2.402)	13.3 (0.524)
090945262	62 (2.441)	13.8 (0.543)
090945263	63 (2.480)	14.3 (0.563)
090945264	64 (2.520)	14.8 (0.583)
090945265	65 (2.559)	15.3 (0.602)

右旋代码 *Code right rotation*	*Ø A*	*B*
090945344	44 (1.732)	4.8 (0.189)
090945345	45 (1.772)	5.3 (0.209)
090945346	46 (1.811)	5.8 (0.228)
090945347	47 (1.850)	6.3 (0.248)
090945348	48 (1.890)	6.8 (0.268)
090945349	49 (1.929)	7.3 (0.287)
090945350	50 (1.969)	7.8 (0.307)
090945351	51 (2.008)	8.3 (0.327)
090945352	52 (2.047)	8.8 (0.346)
090945353	53 (2.087)	9.3 (0.366)
090945354	54 (2.126)	9.8 (0.386)
090945355	55 (2.165)	10.3 (0.406)
090945356	56 (2.205)	10.8 (0.425)
090945357	57 (2.244)	11.3 (0.445)
090945358	58 (2.283)	11.8 (0.465)
090945359	59 (2.323)	12.3 (0.484)
090945360	60 (2.362)	12.8 (0.504)
090945361	61 (2.402)	13.3 (0.524)
090945362	62 (2.441)	13.8 (0.543)
090945363	63 (2.480)	14.3 (0.563)
090945364	64 (2.520)	14.8 (0.583)
090945365	65 (2.559)	15.3 (0.602)

45/120 顶尖端

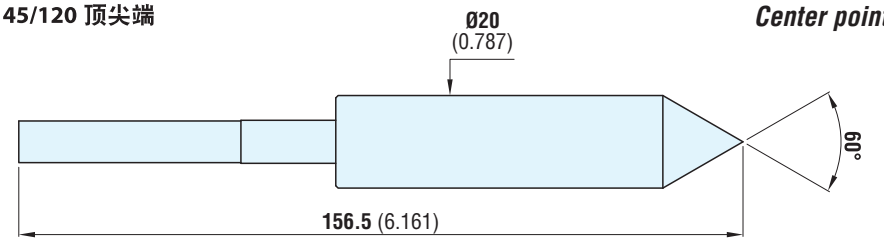

Center point for 45/120

代码 *Code*
072102758

含插槽的 45/120 顶尖端

（适于大型顶尖或孔）

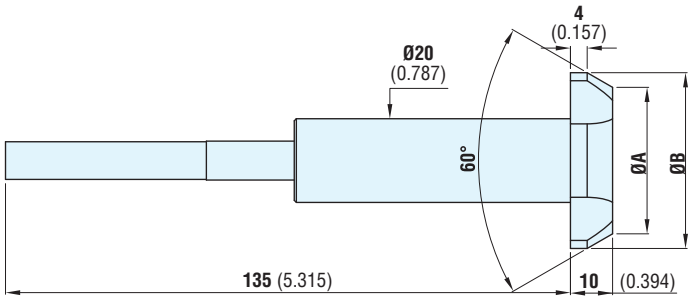

Center points with slots for 45/120

(for large centers or holes)

含插槽的顶尖端代码 *Code centre points with slots*	含插槽的顶尖端尺寸 *Dimensions points with slots*		适于顶尖或“F”孔 *For centers or “F” holes*	
	Ø A	*Ø B*	（最小）/ *from Ø*	（最大）/ *to Ø*
171713020	14 (0.551)	21 (0.827)	16.5 (0.650)	19.5 (0.768)
171713021	17 (0.669)	24 (0.945)	19.5 (0.768)	22.5 (0.886)
171713022	20 (0.787)	27 (1.063)	22.5 (0.886)	25.5 (1.004)
171713023	23 (0.906)	30 (1.181)	25.5 (1.004)	28.5 (1.122)
171713024	26 (1.024)	33 (1.299)	28.5 (1.122)	31.5 (1.240)
171713025	29 (1.142)	36 (1.417)	31.5 (1.240)	34.5 (1.358)
171713026	32 (1.260)	39 (1.535)	34.5 (1.358)	37.5 (1.476)
171713027	35 (1.378)	42 (1.654)	37.5 (1.476)	40.5 (1.594)
171713028	38 (1.496)	45 (1.772)	40.5 (1.594)	43.5 (1.713)
171713029	41 (1.614)	48 (1.890)		
171713030	44 (1.732)	51 (2.008)		

有关操作说明，请参见第 41 页

For operating instructions, see page. 41

含整体法兰的端面驱动顶尖 100/220

FACE DRIVER 100/220 WITH INTEGRAL FLANGE

特性：

该端面驱动顶尖适合加工直径在 100mm（3.937 英寸）和 220mm（8.661 英寸）之间的轴。也可从端面驱动顶尖侧进行大型工具加工；可在不拆卸其他端面驱动顶尖部件情况下更换顶尖端和传动销。

FEATURES:

This face driver is suitable for machining shafts of between 100 (inch 3.937) and 220 (inch 8.661) millimetres in diameter. Machining with large tools can also be carried out from the face driver side; the center point and the driving pins can be replaced without having to remove other face driver components.

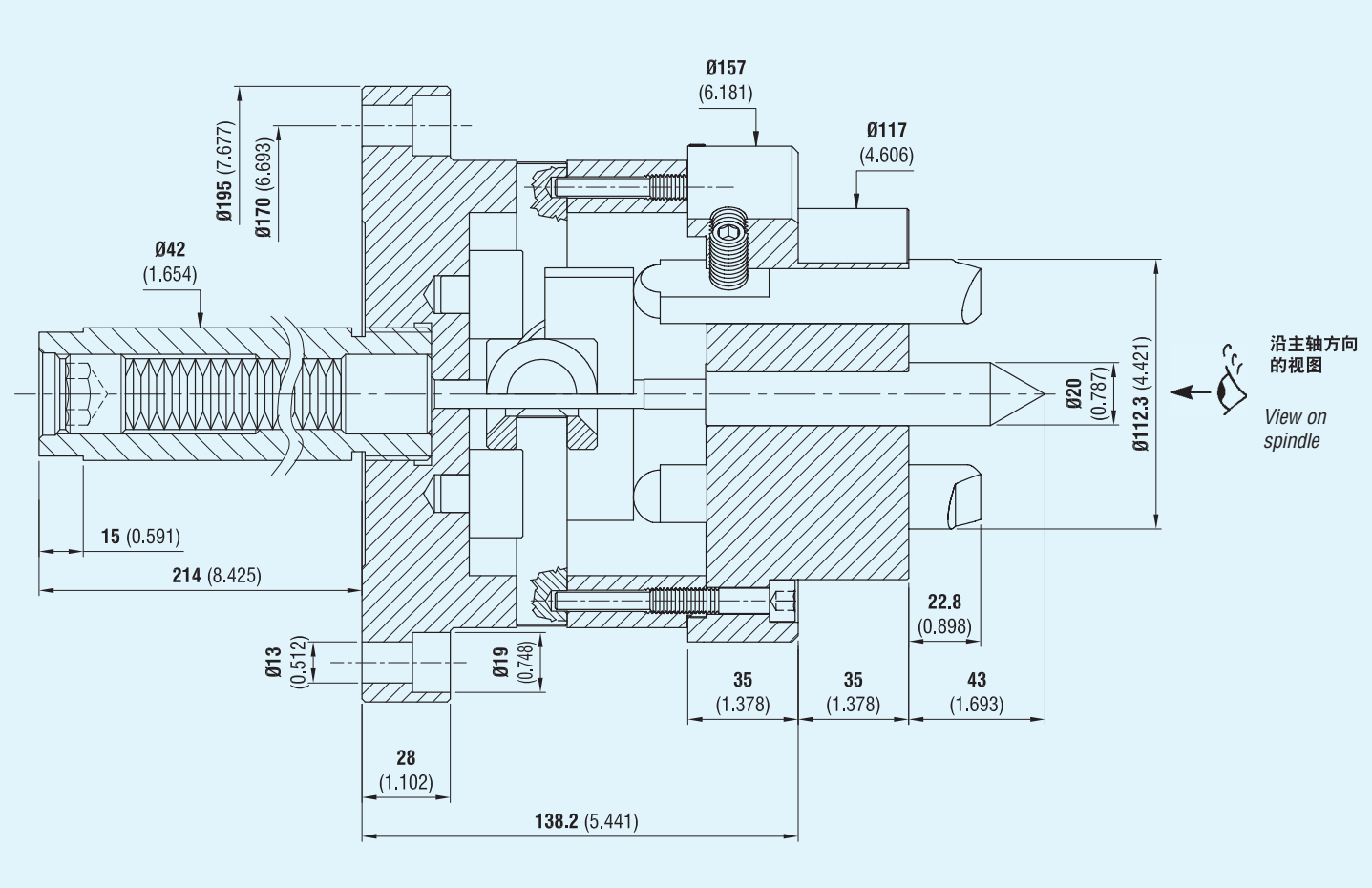

右旋代码 *Code right rotation*	左旋代码 *Code left rotation*
070760017	070760008

含整体法兰的端面驱动顶尖 100/220 的备件

SPARE PARTS FOR FACE DRIVER 100/220 WITH INTEGRAL FLANGE

备件

100/220 传动销

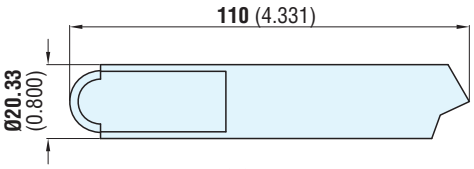

左旋 /*left rotation*

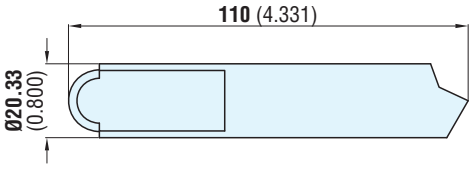

右旋 /*right rotation*

SPARE PARTS

Driving pins for 100/220

左旋代码 *Code left rotation*	右旋代码 *Code right rotation*
080810212	080810213

100/220 低位传动销

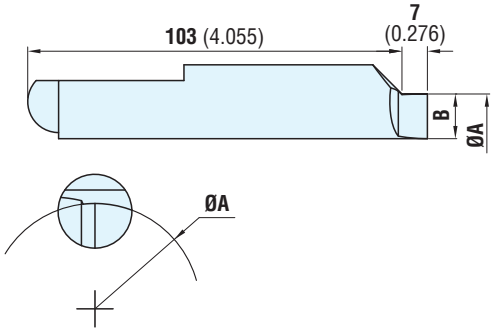

Lowered driving pins for 100/220

左旋代码 *Code left rotation*	*Ø A*	*B*
090900084	84 (3.307)	6.2 (0.244)
090900089	89 (3.504)	8.7 (0.343)
090900094	94 (3.701)	11.2 (0.441)
090900099	99 (3.898)	13.7 (0.539)

右旋代码 *Code right rotation*	*Ø A*	*B*
090901084	84 (3.307)	6.2 (0.244)
090901089	89 (3.504)	8.7 (0.343)
090901094	94 (3.701)	11.2 (0.441)
090901099	99 (3.898)	13.7 (0.539)

100/220 顶尖端

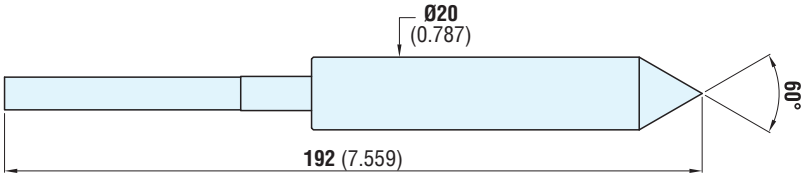

Center point for 100/220

代码 *Code*
072102739

含插槽的 100/220 顶尖端

（适于大型顶尖或孔）

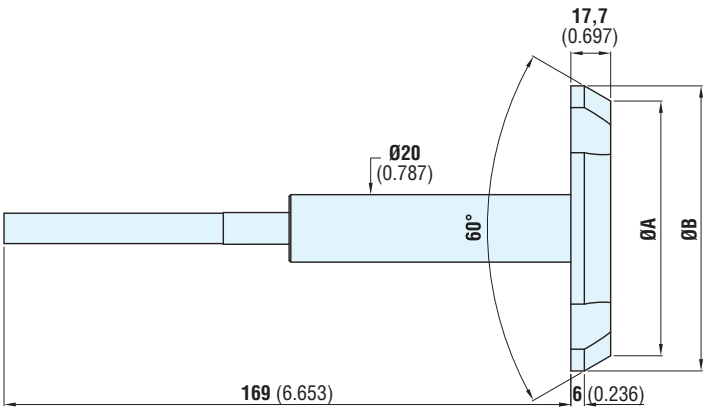

Center points with slots for 100/220

(for large centers or holes)

含插槽的顶尖端代码 *Code centre points with slots*	含插槽的顶尖端尺寸 *Dimensions points with slots*		适于顶尖或“F”孔 *For centers or “F” holes*	
	Ø A	*Ø B*	（最小）/ *from Ø*	（最大）/ *to Ø*
171714001	12.5 (0,492)	26 (1.024)	19.5 (0.768)	24 (0.945)
171714002	17 (0.669)	30.5 (1.201)	24 (0.945)	28.5 (1.122)
171714003	21.5 (0.846)	35 (1.378)	28.5 (1.122)	33 (1.299)
171714004	26 (1.024)	39.5 (1.555)	33 (1.299)	37.5 (1.476)
171714005	30.5 (1.201)	44 (1.732)	37.5 (1.476)	42 (1.654)
171714006	35 (1.378)	48.5 (1.909)	42 (1.654)	46.5 (1.831)
171714007	39.5 (1.555)	53 (2.087)	46.5 (1.831)	51 (2.008)
171714008	44 (1.732)	57.5 (2.264)	51 (2.008)	55.5 (2.185)
171714009	48.5 (1.909)	62 (2.441)	55.5 (2.185)	60 (2.362)
171714010	53 (2.087)	66.5 (2.618)	60 (2.362)	64.5 (2.539)
171714011	57.5 (2.264)	71 (2.795))	64.5 (2.539)	69 (2.717)
171714012	62 (2.441)	75.5 (2.972)	69 (2.717)	73.5 (2.894)
171714013	66.5 (2.618)	80 (3.150)	73.5 (2.894)	78 (3.071)
171714014	71 (2.795)	84.5 (3.327)	78 (3.071)	82.5 (3.248)
171714015	75.5 (2.972)	89 (3.504)	82.5 (3.248)	87 (3.425)
171714016	80 (3.150)	93.5 (3.681)	87 (3.425)	91.5 (3.602)
171714017	84.5 (3.327)	98 (3.858)		
171714018	89 (3.504)	102.5 (4.035)		

有关操作说明，请参见第 41 页

For operating instructions, see page. 41

含整体法兰的端面驱动顶尖 180/300

FACE DRIVER 180/300 WITH INTEGRAL FLANGE

特性：

该端面驱动顶尖适合加工直径在 180mm（7.087 英寸）和 300mm（11.811 英寸）之间的轴。
也可从端面驱动顶尖侧进行大型工具加工；可在不拆卸其他端面驱动顶尖部件情况下更换顶尖端和传动销。

FEATURES:

This face driver is suitable for machining shafts of between 180 (inch 7.087) and 300 (inch 11.811) millimetres in diameter.
Machining with large tools can also be carried out from the face driver side; the center point and the driving pins can be replaced without having to remove other face driver components.

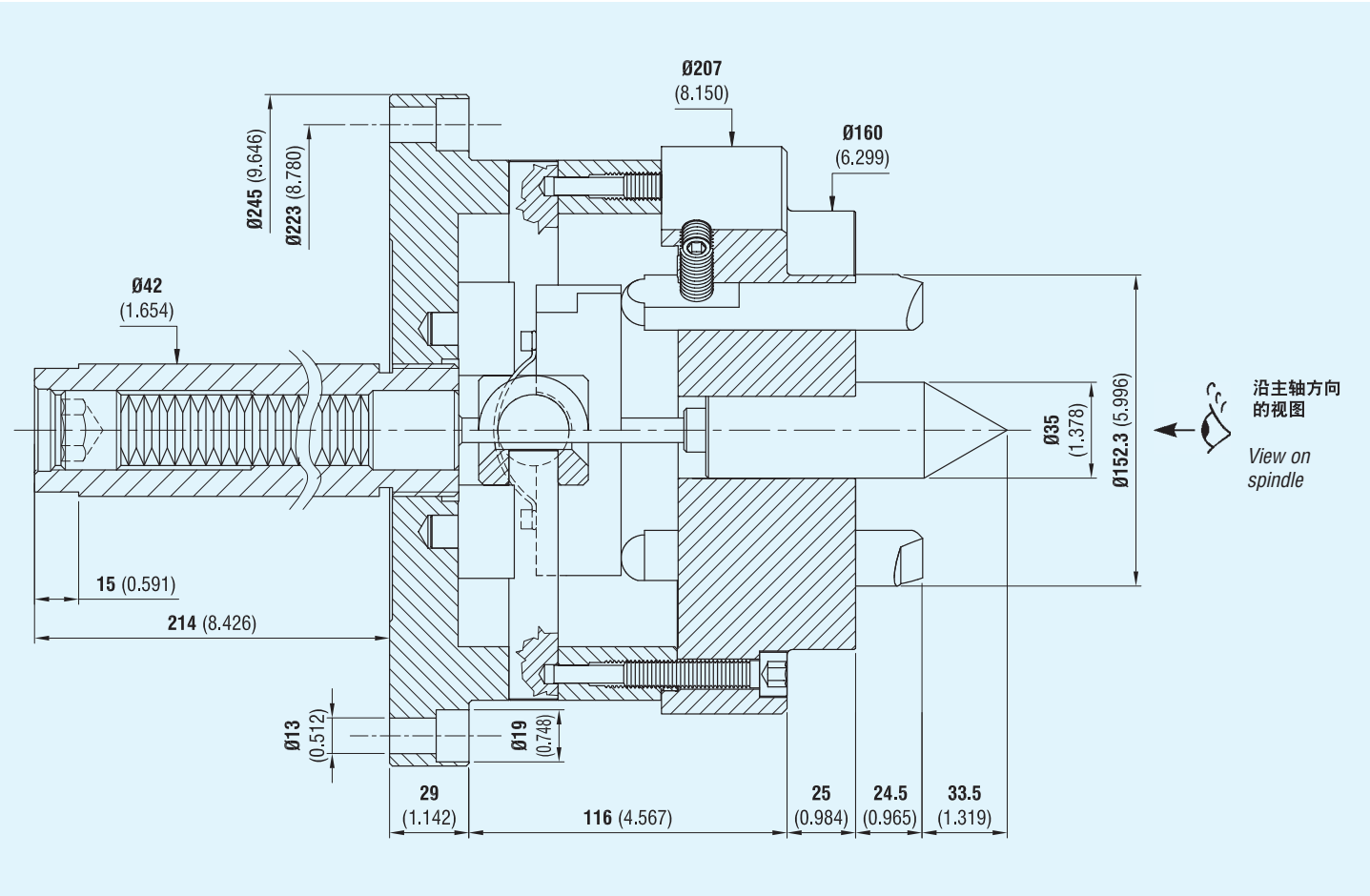

右旋代码 *Code right rotation*	左旋代码 *Code left rotation*
070760038	070760036

含整体法兰的端面驱动顶尖 180/300 的备件

SPARE PARTS FOR FACE DRIVER 180/300 WITH INTEGRAL FLANGE

备件

180/300 传动销

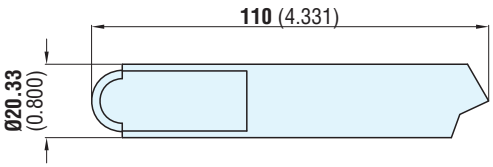

左旋 /*left rotation*

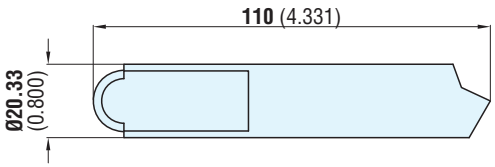

右旋 /*right rotation*

SPARE PARTS

Driving pins for 180/300

左旋代码 *Code left rotation*	右旋代码 *Code right rotation*
080810212	080810213

180/300 低位传动销

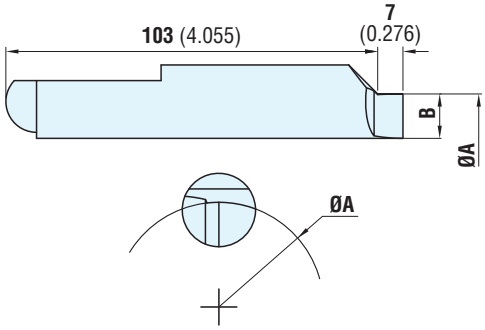

Lowered driving pins for 180/300

左旋代码 *Code left rotation*	*Ø A*	*B*
090900084	124 (4.882)	6.2 (0.244)
090900089	129 (5.079)	8.7 (0.343)
090900094	134 (5.276)	11.2 (0.441)
090900099	139 (5.472)	13.7 (0.539)

右旋代码 *Code right rotation*	*Ø A*	*B*
090901084	124 (4.882)	6.2 (0.244)
090901089	129 (5.079)	8.7 (0.343)
090901094	134 (5.276)	11.2 (0.441)
090901099	139 (5.472)	13.7 (0.539)

180/300 顶尖端

Center point for 180/300

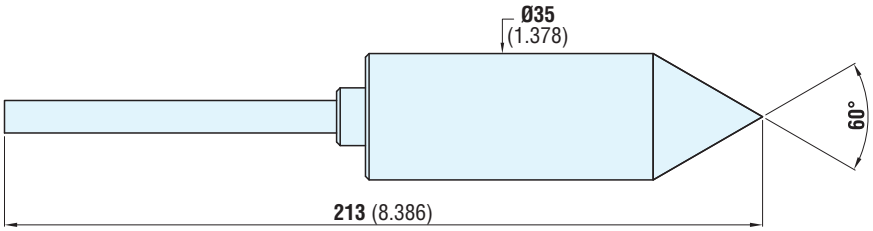

代码 *Code*
072102761

含插槽的 180/300 顶尖端

（适于大型顶尖或孔）

Center points with slots for 180/300

(for large centers or holes)

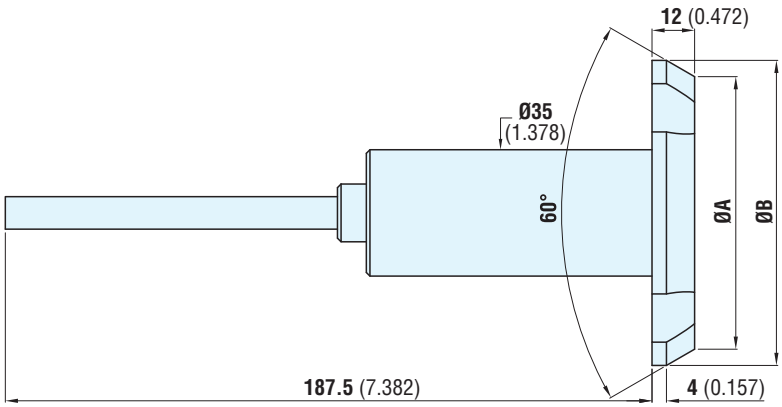

有关操作说明，请参见第 41 页

For operating instructions, see page. 41

按要求提供 / Available on request)

含液压缸控制的固定顶尖端和传动销的法兰式端面驱动顶尖 12/50

FACE DRIVER 12/50 FLANGED, WITH FIXED CENTER POINT AND DRIVING PINS OPERATED BY HYDRAULIC CYLINDER

特性：

含液压缸控制的可互换固定顶尖端的端面驱动顶尖适合加工直径在 12mm（0.472 英寸）和 50mm（1.969 英寸）之间的轴，也可在车削中用于加工最大同心度误差为 0.020 的轴。

FEATURES:

This face driver with interchangeable fixed centre point hydraulically operated, is suitable for machining shafts of between 12 (inch 0.472) and 50 (inch 1.969) millimetres in diameter and it has been manufactured to obtain in turning too, machining of shafts with error of concentricity max 0.020.

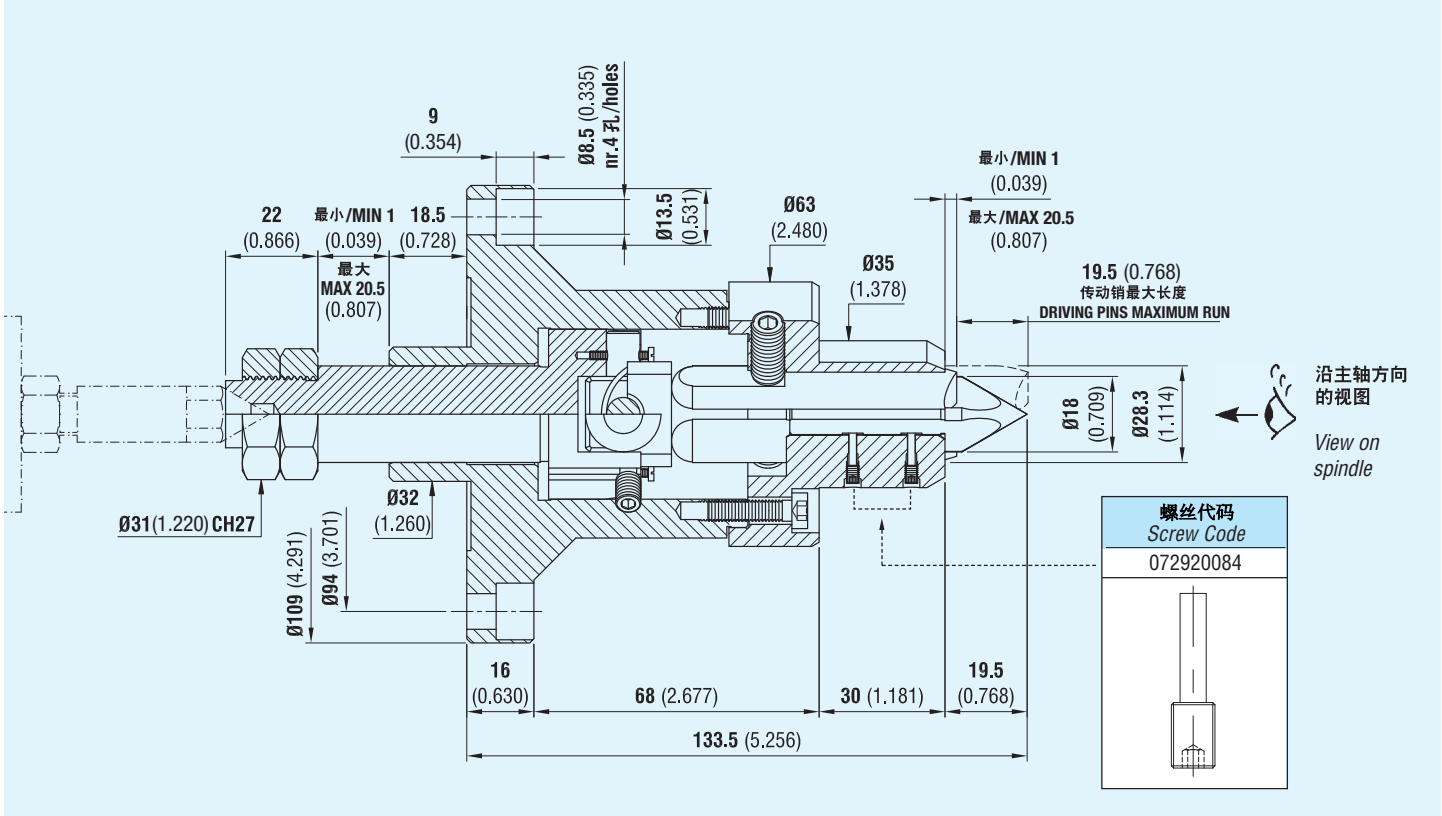

右旋代码 *Code right rotation*	左旋代码 *Code left rotation*
070760040	070760041

端面驱动顶尖 12/50 的备件

SPARE PARTS FOR FACE DRIVER 12/50

备件

12/50 传动销

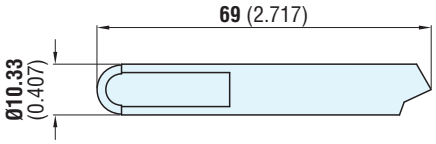

左旋 /*left rotation*

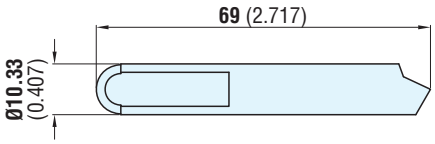

右旋 /*right rotation*

SPARE PARTS

Driving pins for 12/50

左旋代码 *Code left rotation*	右旋代码 *Code right rotation*
080809002	080809003

12/50 低位传动销

注：关于这些尺寸，请联系我们的技术部门

WARNING: *contact our technical department for these dimensions*

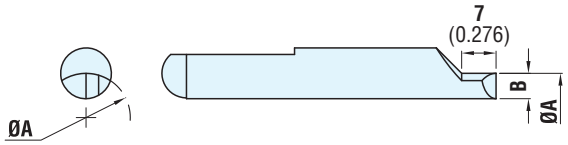

Lowered driving pins for 12/50

左旋代码 *Code left rotation*	*A*	*B*
090909012	12 (0.472)	2.1 (0.083)
090909013	13 (0.512)	2.6 (0.102)
090909014	14 (0.551)	3.1 (0.122)
090909015	15 (0.591)	3.6 (0.142)
090909016	16 (0.630)	4.1 (0.161)
090909017	17 (0.669)	4.6 (0.181)
090909018	18 (0.709)	5.1 (0.201)
090909019	19 (0.748)	5.6 (0.220)
090909020	20 (0.787)	6.1 (0.240)
090909021	21 (0.827)	6.6 (0.260)
090909022	22 (0.866)	7.1 (0.280)
090909023	23 (0.906)	7.6 (0.299)
090909024	24 (0.945)	8.1 (0.319)
090909025	25 (0.984)	8.6 (0.339)

右旋代码 *Code right rotation*	*A*	*B*
090909112	12 (0.472)	2.1 (0.083)
090909113	13 (0.512)	2.6 (0.102)
090909114	14 (0.551)	3.1 (0.122)
090909115	15 (0.591)	3.6 (0.142)
090909116	16 (0.630)	4.1 (0.161)
090909117	17 (0.669)	4.6 (0.181)
090909118	18 (0.709)	5.1 (0.201)
090909119	19 (0.748)	5.6 (0.220)
090909120	20 (0.787)	6.1 (0.240)
090909121	21 (0.827)	6.6 (0.260)
090909122	22 (0.866)	7.1 (0.280)
090909123	23 (0.906)	7.6 (0.299)
090909124	24 (0.945)	8.1 (0.319)
090909125	25 (0.984)	8.6 (0.339)

12/50 固定顶尖端

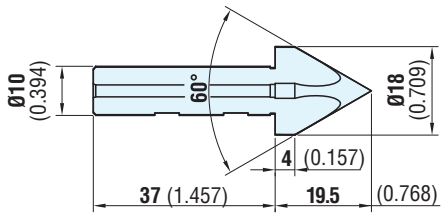

Fixed center point for 12/50

代码 *Code*
072102768

含插槽的 12/50 固定顶尖端

（适于大型顶尖或孔）

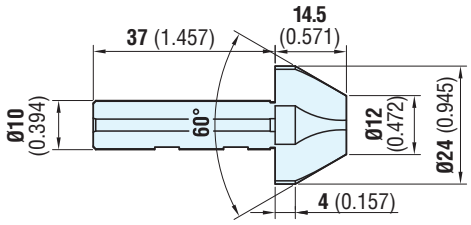

Fixed center point with slots for 12/50

(for large centers or holes)

含插槽的顶尖端代码 *Code centre points with slots*	适于顶尖或“F”孔 *For centers or “F” holes*	
	（最小）/*from Ø*	（最大）/ *to Ø*
179200101	15 (0.591)	22 (0.866)

含液压缸控制的固定顶尖端和传动销的法兰式端面驱动顶尖 15/55

FACE DRIVER 15/55 FLANGED, WITH FIXED CENTER POINT AND DRIVING PINS OPERATED BY HYDRAULIC CYLINDER

特性：

含液压缸控制的可互换固定顶尖端的端面驱动顶尖适合加工直径在 15mm（0.591 英寸）和 55mm（2.165 英寸）之间的轴，也可在车削中用于加工最大同心度误差为 0.020 的轴。

FEATURES:

This face driver with interchangeable fixed centre point hydraulically operated, is suitable for machining shafts of between 15 (inch 0.591) and 55 (inch 2.165) mm, in diameter and it has been manufactured to obtain in turning too, machining of shafts with error of concentricity max 0.020.

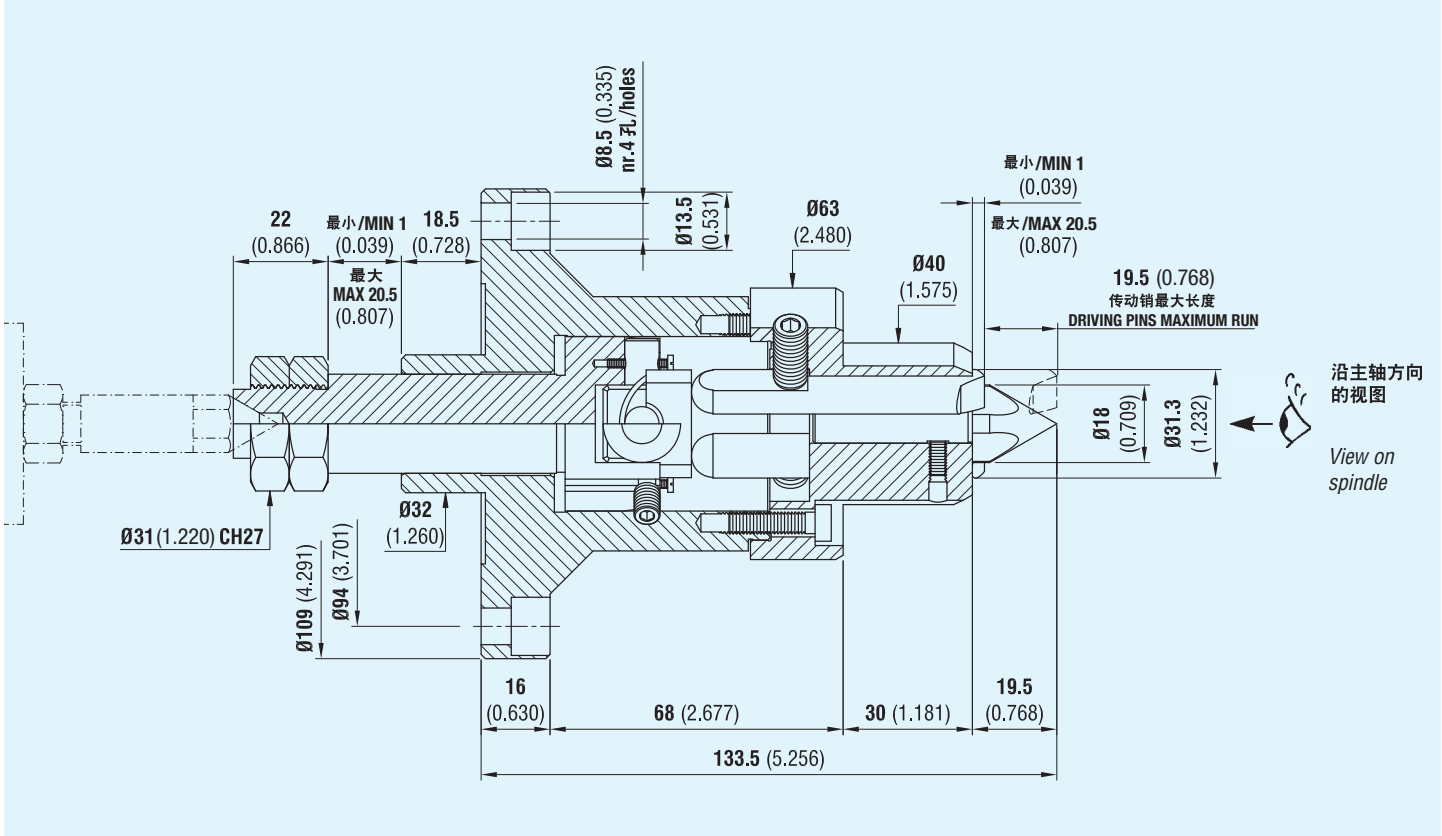

右旋代码 *Code right rotation*	左旋代码 *Code left rotation*
070752410	070752411

端面驱动顶尖 15/55 的备件

SPARE PARTS FOR FACE DRIVER 15/55

备件

15/55 传动销

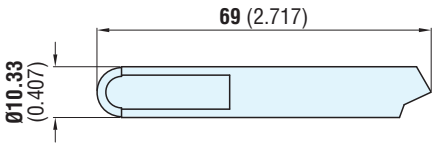

左旋 /*left rotation*

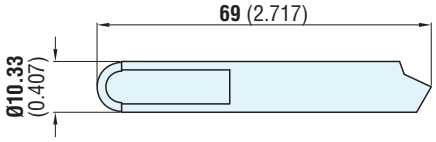

右旋/*right rotation*

SPARE PARTS

Driving pins for 15/55

左旋代码 *Code left rotation*	右旋代码 *Code right rotation*
080809002	080809003

15/55 低位传动销

注：关于这些尺寸，请联系我们的技术部门

***WARNING:** contact our technical department for these dimensions*

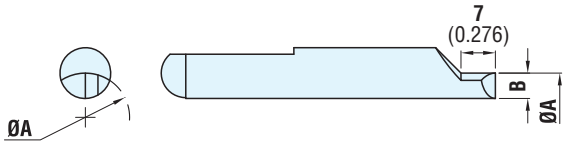

Lowered driving pins for 15/55

左旋代码 *Code left rotation*	*Ø A*	*B*
090909012	15 (0.591)	2.1 (0.083)
090909013	16 (0.630)	2.6 (0.102)
090909014	17 (0.669)	3.1 (0.122)
090909015	18 (0.709)	3.6 (0.142)
090909016	19 (0.748)	4.1 (0.161)
090909017	20 (0.787)	4.6 (0.181)
090909018	21 (0.827)	5.1 (0.201)
090909019	22 (0.866)	5.6 (0.220)
090909020	23 (0.906)	6.1 (0.240)
090909021	24 (0.945)	6.6 (0.260)
090909022	25 (0.984)	7.1 (0.280)
090909023	26 (1.024)	7.6 (0.299)
090909024	27 (1.063)	8.1 (0.319)
090909025	28 (1.102)	8.6 (0.339)

右旋代码 *Code right rotation*	*Ø A*	*B*
090909112	15 (0.591)	2.1 (0.083)
090909113	16 (0.630)	2.6 (0.102)
090909114	17 (0.669)	3.1 (0.122)
090909115	18 (0.709)	3.6 (0.142)
090909116	19 (0.748)	4.1 (0.161)
090909117	20 (0.787)	4.6 (0.181)
090909118	21 (0.827)	5.1 (0.201)
090909119	22 (0.866)	5.6 (0.220)
090909120	23 (0.906)	6.1 (0.240)
090909121	24 (0.945)	6.6 (0.260)
090909122	25 (0.984)	7.1 (0.280)
090909123	26 (1.024)	7.6 (0.299)
090909124	27 (1.063)	8.1 (0.319)
090909125	28 (1.102)	8.6 (0.339)

15/55 固定顶尖端

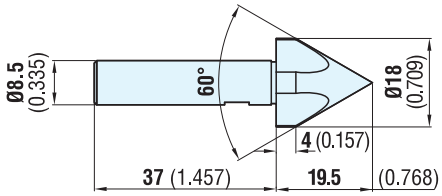

Fixed center point for 15/55

代码 *Code*
072102769

含插槽的 15/55 顶尖端

（适于大型顶尖或孔）

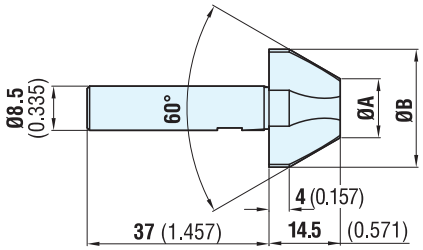

Fixed center point with slots for 15/55

(for large centers or holes)

含插槽的顶尖端代码 *Code centre points with slots*	含插槽的顶尖端尺寸 *Dimensions points with slots*		适于顶尖或“F”孔 *For centers or “F” holes*	
	Ø A	*Ø B*	（最小）/ *from Ø*	（最大）/ *to Ø*
171711018	12 (0.472)	24 (0.945)	15 (0.591)	23 (0.906)
171711021	18 (0.709)	30 (1.181)	21 (0.827)	26 (1.024)

含液压缸控制的固定顶尖端和传动销的法兰式端面驱动顶尖 20/60

FACE DRIVER 20/60 FLANGED, WITH FIXED CENTER POINT AND DRIVING PINS OPERATED BY HYDRAULIC CYLINDER

特性：

含液压缸控制的可互换固定顶尖端的端面驱动顶尖适合加工直径在 20mm（0.787 英寸）和 60mm（2.362 英寸）之间的轴，也可在车削中用于加工最大同心度误差为 0.020 的轴。

FEATURES:

This face driver with interchangeable fixed centre point hydraulically operated, is suitable for machining shafts of between 20 (inch 0.787) and 60 (inch 2.362) millimetres in diameter and it has been manufactured to obtain in turning too, machining of shafts with error of concentricity max 0.020.

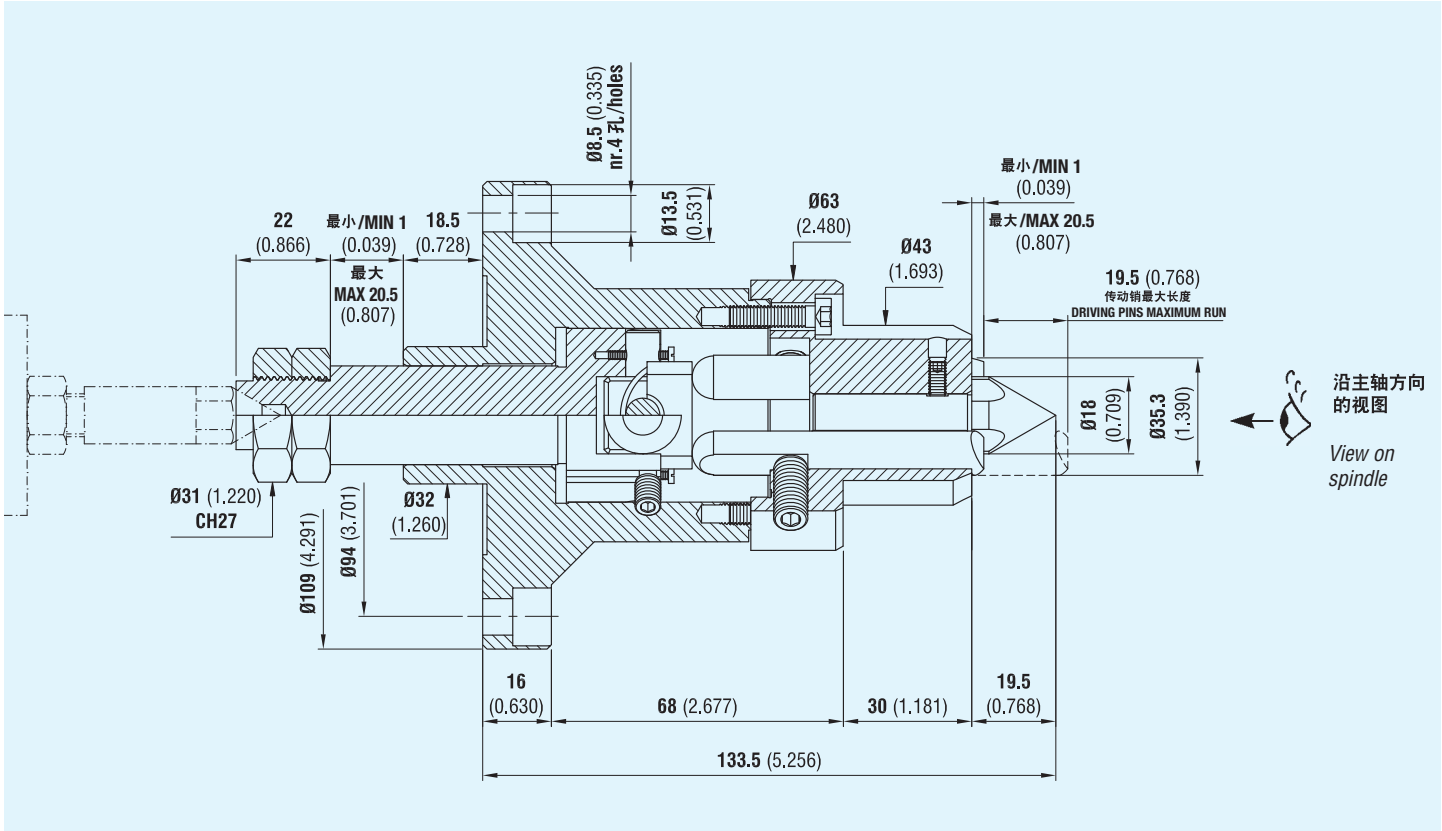

右旋代码 *Code right rotation*	左旋代码 *Code left rotation*
070752412	070752413

端面驱动顶尖 20/60 的备件

SPARE PARTS FOR FACE DRIVER 20/60

备件

20/60 传动销

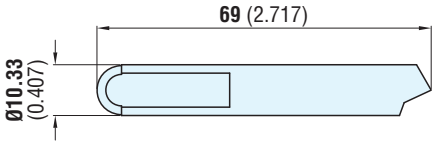

左旋 /*left rotation*

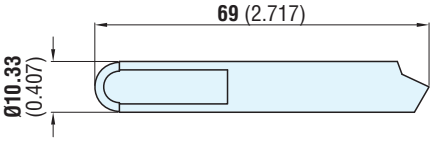

右旋 /*right rotation*

SPARE PARTS

Driving pins for 20/60

左旋代码 *Code left rotation*	右旋代码 *Code right rotation*
080809002	080809003

20/60 低位传动销

Lowered driving pins for 20/60

注：关于这些尺寸，请联系我们的技术部门

WARNING: *contact our technical department for these dimensions*

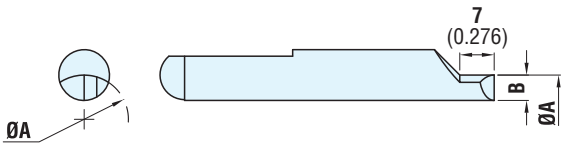

左旋代码 *Code left rotation*	*Ø A*	*B*
090909012	19 (0.748)	2.1 (0.083)
090909013	20 (0.787)	2.6 (0.102)
090909014	21 (0.827)	3.1 (0.122)
090909015	22 (0.866)	3.6 (0.142)
090909016	23 (0.906)	4.1 (0.161)
090909017	24 (0.945)	4.6 (0.181)
090909018	25 (0.984)	5.1 (0.201)
090909019	26 (1.024)	5.6 (0.220)
090909020	27 (1.063)	6.1 (0.240)
090909021	28 (1.102)	6.6 (0.260)
090909022	29 (1.142)	7.1 (0.280)
090909023	30 (1.181)	7.6 (0.299)
090909024	31 (1.220)	8.1 (0.319)
090909025	32 (1.260)	8.6 (0.339)

右旋代码 *Code right rotation*	*Ø A*	*B*
090909112	19 (0.748)	2.1 (0.083)
090909113	20 (0.787)	2.6 (0.102)
090909114	21 (0.827)	3.1 (0.122)
090909115	22 (0.866)	3.6 (0.142)
090909116	23 (0.906)	4.1 (0.161)
090909117	24 (0.945)	4.6 (0.181)
090909118	25 (0.984)	5.1 (0.201)
090909119	26 (1.024)	5.6 (0.220)
090909120	27 (1.063)	6.1 (0.240)
090909121	28 (1.102)	6.6 (0.260)
090909122	29 (1.142)	7.1 (0.280)
090909123	30 (1.181)	7.6 (0.299)
090909124	31 (1.220)	8.1 (0.319)
090909125	32 (1.260)	8.6 (0.339)

20/60 固定顶尖端

Fixed center point for 20/60

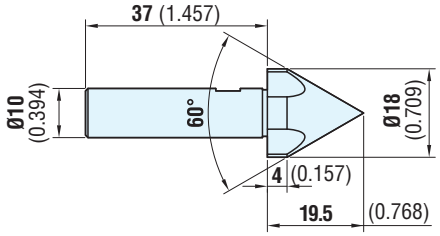

代码 *Code*
072102770

含插槽的 20/60 固定顶尖端

（适于大型顶尖或孔）

Fixed center point with slots for 20/60

(for large centers or holes)

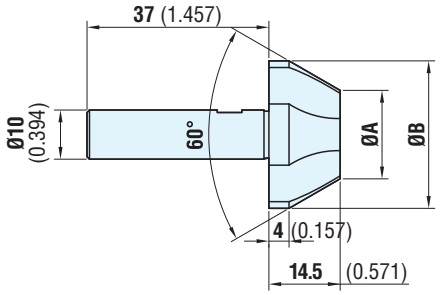

含插槽的 顶尖端代码 *Code centre points with slots*	含插槽的顶尖端尺寸 *Dimensions points with slots*		适于顶尖或“F”孔 *For centers or “F” holes*	
	Ø A	*Ø B*	（最小）/ *from Ø*	（最大）/ *to Ø*
171712021	12 (0.472)	24 (0.945)	15 (0.591)	23 (0.906)
171712023	15 (0.591)	27 (1.063)	18 (0.709)	26 (1.024)
171712025	18 (0.709)	30 (1.181)	21 (0.827)	29 (1.142)
171712028	24 (0.945)	36 (1.417)	26 (1.024)	31 (1.220)

含液压缸控制的固定顶尖端和传动销的法兰式端面驱动顶尖 20/70

FACE DRIVER 20/70 FLANGED, WITH FIXED CENTER POINT AND DRIVING PINS OPERATED BY HYDRAULIC CYLINDER

特性：

含液压缸控制的可互换固定顶尖端的端面驱动顶尖适合加工直径在 20mm（0.787 英寸）和 70mm（2.756 英寸）之间的轴，也可在车削中用于加工最大同心度误差为 0.020 的轴。

FEATURES:

This face driver with interchangeable fixed centre point hydraulically operated, is suitable for machining shafts of between 20 (inch 0.787) and 70 (inch 2.756) millimetres in diameter and it has been manufactured to obtain in turning too, machining of shafts with error of concentricity max 0.020.

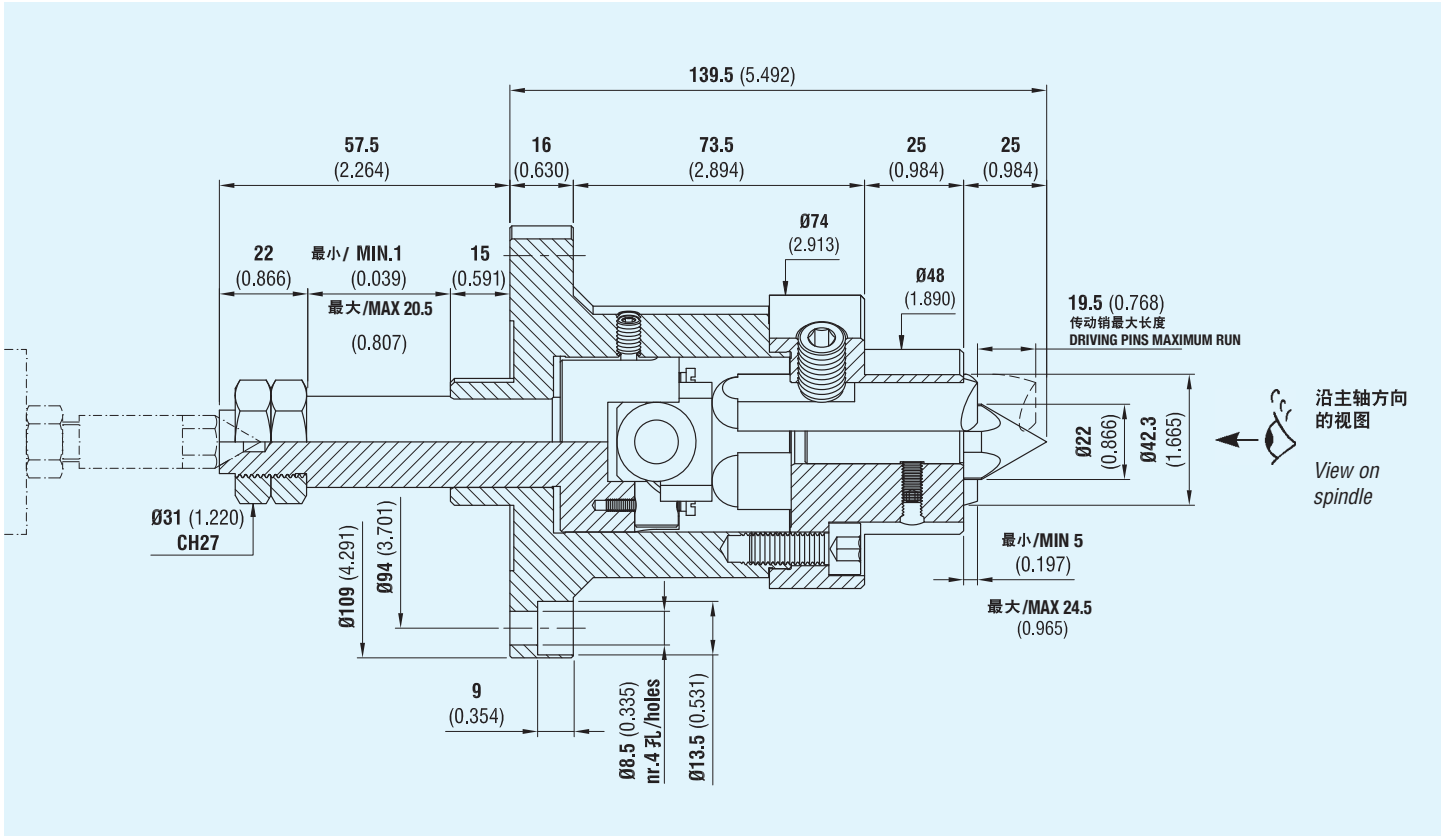

右旋代码 *Code right rotation*	左旋代码 *Code left rotation*
070760042	070760043

端面驱动顶尖 20/70 的备件

SPARE PARTS FOR FACE DRIVER 20/70

备件

20/70 传动销

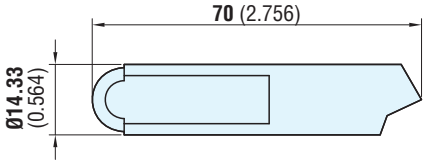

左旋 /*left rotation*

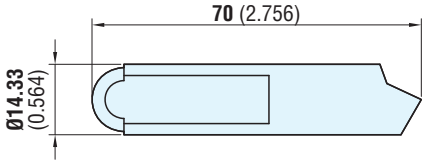

右旋 /*right rotation*

SPARE PARTS

Driving pins for 20/70

左旋代码 *Code left rotation*	右旋代码 *Code right rotation*
080809004	080809005

20/70 低位传动销

注：关于这些尺寸，请联系我们的技术部门

WARNING: *contact our technical department for these dimensions*

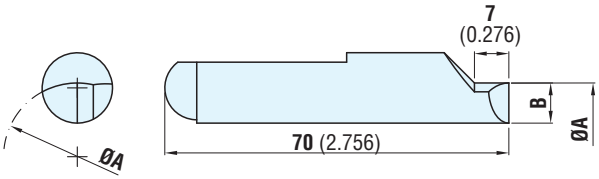

Lowered driving pins for 20/70

左旋代码 *Code left rotation*	*Ø A*	*B*
090909219	19 (0.748)	2.7 (0.106)
090909220	20 (0.787)	3.2 (0.126)
090909221	21 (0.827)	3.7 (0.146)
090909222	22 (0.866)	4.2 (0.165)
090909223	23 (0.906)	4.7 (0.185)
090909224	24 (0.945)	5.2 (0.205)
090909225	25 (0.984)	5.7 (0.224)
090909226	26 (1.024)	6.2 (0.244)
090909227	27 (1.063)	6.7 (0.264)
090909228	28 (1.102)	7.2 (0.283)
090909229	29 (1.142)	7.7 (0.303)
090909230	30 (1.181)	8.2 (0.323)
090909231	31 (1.220)	8.7 (0.343)
090909232	32 (1.260)	9.2 (0.362)
090909233	33 (1.299)	9.7 (0.382)
090909234	34 (1.339)	10.2 (0.402)
090909235	35 (1.378)	10.7 (0.421)
090909236	36 (1.417)	11.2 (0.441)

右旋代码 *Code right rotation*	*Ø A*	*B*
090909319	19 (0.748)	2.7 (0.106)
090909320	20 (0.787)	3.2 (0.126)
090909321	21 (0.827)	3.7 (0.146)
090909322	22 (0.866)	4.2 (0.165)
090909323	23 (0.906)	4.7 (0.185)
090909324	24 (0.945)	5.2 (0.205)
090909325	25 (0.984)	5.7 (0.224)
090909326	26 (1.024)	6.2 (0.244)
090909327	27 (1.063)	6.7 (0.264)
090909328	28 (1.102)	7.2 (0.283)
090909329	29 (1.142)	7.7 (0.303)
090909330	30 (1.181)	8.2 (0.323)
090909331	31 (1.220)	8.7 (0.343)
090909332	32 (1.260)	9.2 (0.362)
090909333	33 (1.299)	9.7 (0.382)
090909334	34 (1.339)	10.2 (0.402)
090909335	35 (1.378)	10.7 (0.421)
090909336	36 (1.417)	11.2 (0.441)

20/70 固定顶尖端

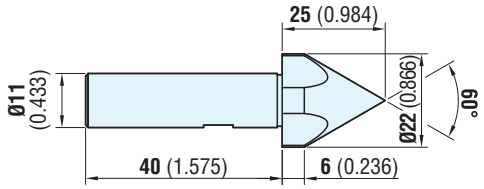

Fixed center point for 20/70

代码 *Code*
072102771

含插槽的 20/70 固定顶尖端

（适于大型顶尖或孔）

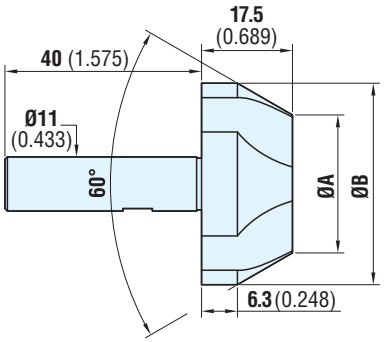

Fixed center point with slots for 20/70

(for large centers or holes)

含插槽的顶尖端代码 *Code centre points with slots*	含插槽的顶尖端尺寸 *Dimensions points with slots*		适于顶尖或“F”孔 *For centers or “F” holes*	
	Ø A	*Ø B*	（最小）/ *from Ø*	（最大）/ *to Ø*
179200114	17 (0.669)	30 (1.181)	19 (0.748)	29 (1.142)
179200116	23 (0.906)	36 (1.417)	25 (0.984)	35 (1.378)

含液压缸控制的固定顶尖端和传动销的法兰式端面驱动顶尖 45/120

FACE DRIVER 45/120 FLANGED, WITH FIXED CENTER POINT AND DRIVING PINS OPERATED BY HYDRAULIC CYLINDER

特性：

含液压缸控制的可互换固定顶尖端的端面驱动顶尖适合加工直径在 45mm（1.772 英寸）和 120mm（4.724 英寸）之间的轴，也可在车削中用于加工最大同心度误差为 0.020 的轴。

FEATURES:

This face driver with interchangeable fixed centre point hydraulically operated, is suitable for machining shafts of between 45 (inch 1.772) and 120 (inch 4.724) millimetres in diameter and it has been manufactured to obtain in turning too, machining of shafts with error of concentricity max 0.020.

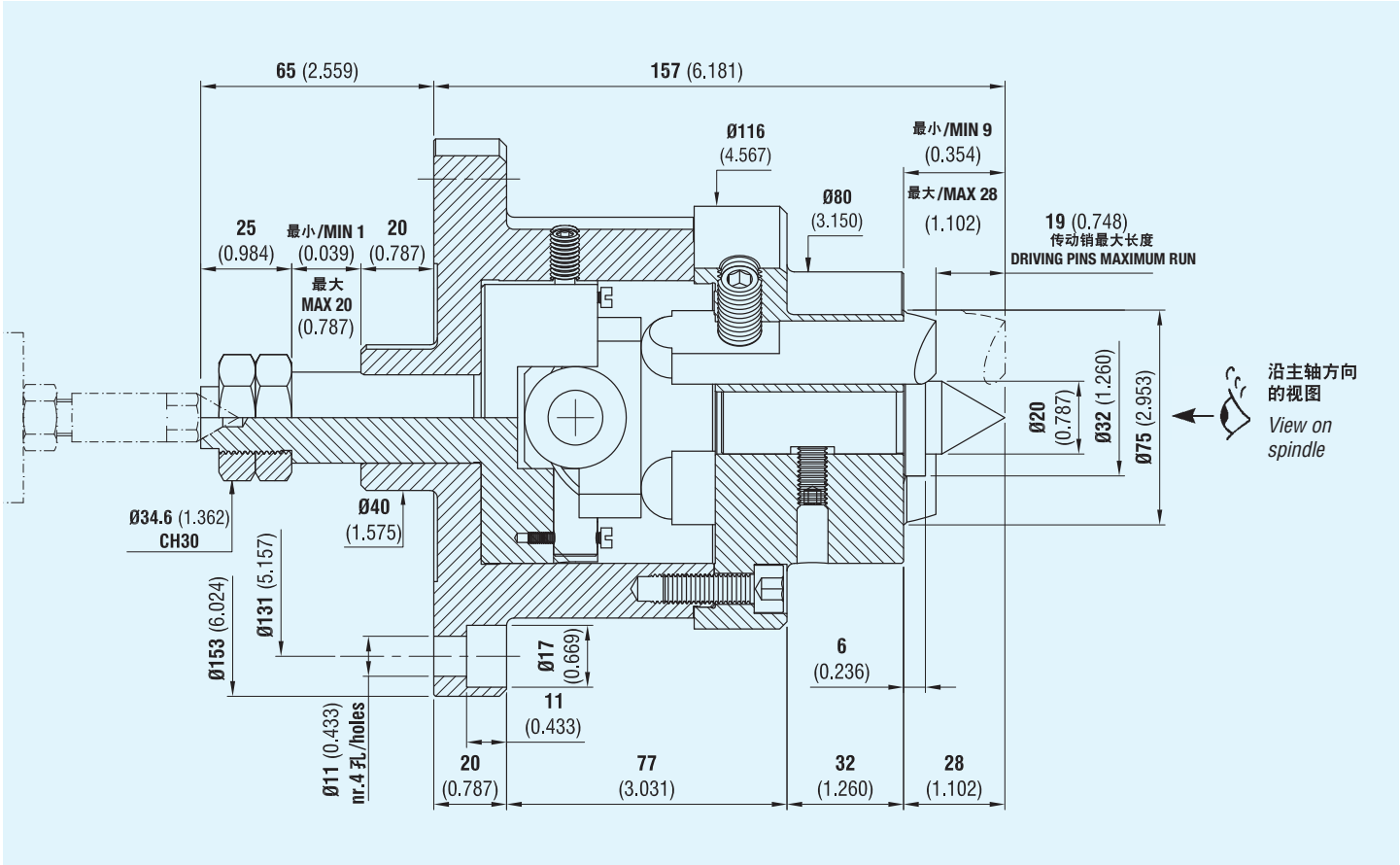

右旋代码 *Code right rotation*	左旋代码 *Code left rotation*
070760044	070760045

端面驱动顶尖 45/120 的备件

SPARE PARTS FOR FACE DRIVER 45/120

备件

45/120 传动销

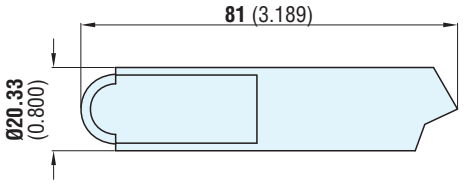

左旋 /*left rotation*

SPARE PARTS

Driving pins for 45/120

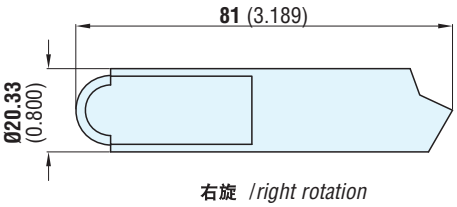

右旋 /*right rotation*

左旋代码 *Code left rotation*	右旋代码 *Code right rotation*
080845017	080845016

45/120 低位传动销

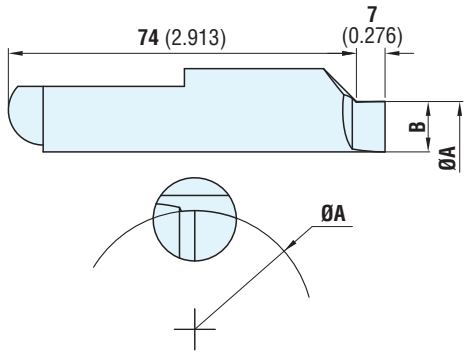

Lowered driving pins for 45/120

左旋代码 *Code left rotation*	*Ø A*	*B*
090945444	44 (1.732)	4.8 (0.189)
090945445	45 (1.772)	5.3 (0.209)
090945446	46 (1.811)	5.8 (0.228)
090945447	47 (1.850)	6.3 (0.248)
090945448	48 (1.890)	6.8 (0.268)
090945449	49 (1.929)	7.3 (0.287)
090945450	50 (1.969)	7.8 (0.307)
090945451	51 (2.008)	8.3 (0.327)
090945452	52 (2.047)	8.8 (0.346)
090945453	53 (2.087)	9.3 (0.366)
090945454	54 (2.126)	9.8 (0.386)
090945455	55 (2.165)	10.3 (0.406)
090945456	56 (2.205)	10.8 (0.425)
090945457	57 (2.244)	11.3 (0.445)
090945458	58 (2.283)	11.8 (0.465)
090945459	59 (2.323)	12.3 (0.484)
090945460	60 (2.362)	12.8 (0.504)
090945461	61 (2.402)	13.3 (0.524)
090945462	62 (2.441)	13.8 (0.543)
090945463	63 (2.480)	14.3 (0.563)
090945464	64 (2.520)	14.8 (0.583)
090945465	65 (2.559)	15.3 (0.602)

右旋代码 *Code right rotation*	*Ø A*	*B*
090945544	44 (1.732)	4.8 (0.189)
090945545	45 (1.772)	5.3 (0.209)
090945546	46 (1.811)	5.8 (0.228)
090945547	47 (1.850)	6.3 (0.248)
090945548	48 (1.890)	6.8 (0.268)
090945549	49 (1.929)	7.3 (0.287)
090945550	50 (1.969)	7.8 (0.307)
090945551	51 (2.008)	8.3 (0.327)
090945552	52 (2.047)	8.8 (0.346)
090945553	53 (2.087)	9.3 (0.366)
090945554	54 (2.126)	9.8 (0.386)
090945555	55 (2.165)	10.3 (0.406)
090945556	56 (2.205)	10.8 (0.425)
090945557	57 (2.244)	11.3 (0.445)
090945558	58 (2.283)	11.8 (0.465)
090945559	59 (2.323)	12.3 (0.484)
090945560	60 (2.362)	12.8 (0.504)
090945561	61 (2.402)	13.3 (0.524)
090945562	62 (2.441)	13.8 (0.543)
090945563	63 (2.480)	14.3 (0.563)
090945564	64 (2.520)	14.8 (0.583)
090945565	65 (2.559)	15.3 (0.602)

45/120 固定顶尖端

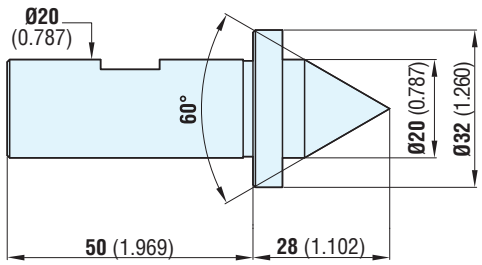

Fixed center point for 45/120

代码 *Code*
072920104

含插槽的 45/120 固定顶尖端

（适于大型顶尖或孔）

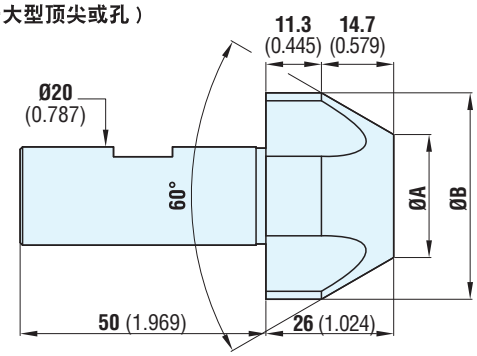

Fixed center points with slots for 45/120

(for large centers or holes)

含插槽的顶尖端代码 *Code centre points with slots*	含插槽的顶尖端尺寸 *Dimensions points with slots*		适于顶尖或“F”孔 *For centers or “F” holes*	
	Ø A	*Ø B*	（最小）/ *from Ø*	（最大）/ *to Ø*
171713031	15 (0.591)	32 (1.260)	18 (0.709)	31 (1.220)
171713032	25 (0.984)	42 (1.654)	28 (1.102)	41 (1.614)
171713033	35 (1.378)	52 (2.047)	38 (1.496)	51 (2.008)
171713034	45 (1.772)	62 (2.441)	48 (1.890)	61 (2.402)
171713035	55 (2.165)	72 (2.835)	58 (2.283)	71 (2.795)

含液压缸控制的固定顶尖端和传动销的法兰式端面驱动顶尖 100/220

FACE DRIVER 100/220 FLANGED, WITH FIXED CENTER POINT AND DRIVING PINS OPERATED BY HYDRAULIC CYLINDER

特性：

含液压缸控制的可互换固定顶尖端的端面驱动顶尖适合加工直径在 100mm（3.937 英寸）和 220mm（8.661 英寸）之间的轴，也可在车削中用于加工最大同心度误差为 0.020 的轴。

FEATURES:

This face driver with interchangeable fixed centre point hydraulically operated, is suitable for machining shafts of between 100 (inch 3.937) and 220 (inch 8.661) millimetres in diameter and it has been manufactured to obtain in turning too, machining of shafts with error of concentricity max 0.020.

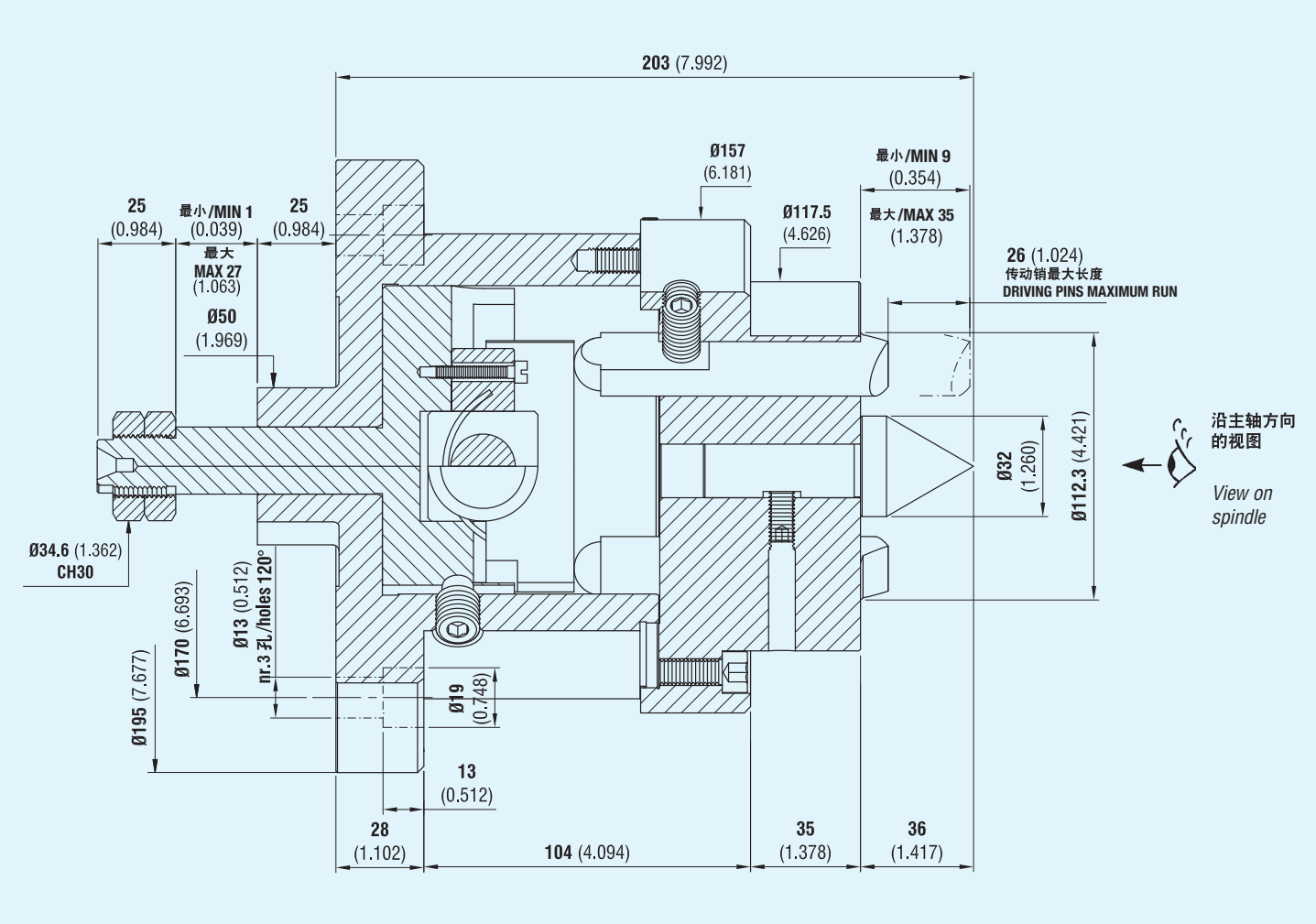

右旋代码 *Code right rotation*	左旋代码 *Code left rotation*
070760046	070760047

端面驱动顶尖 100/220 的备件

SPARE PARTS FOR FACE DRIVER 100/220

备件

100/220 传动销

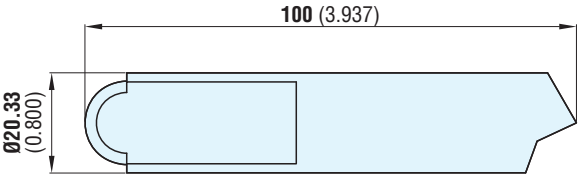

左旋 /*left rotation*

SPARE PARTS

Driving pins for 100/220

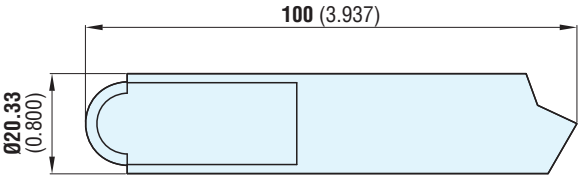

右旋 /*right rotation*

左旋代码 *Code left rotation*
080810215

右旋代码 *Code right rotation*
080810214

100/220 低位传动销

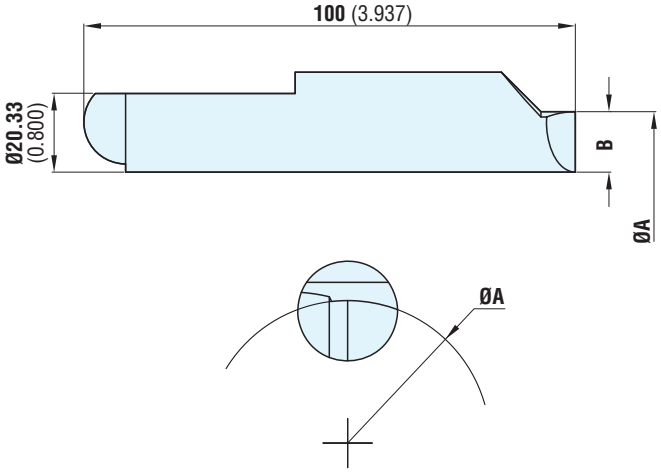

Lowered driving pins for 100/220

左旋代码 *Code left rotation*	*Ø A*	*B*
090909084	84 (3.307)	6.3 (0.248)
090909089	89 (3.504)	8.8 (0.346)
090909094	94 (3.701)	11.3 (0.445)
090909099	99 (3.898)	13.8 (0.543)

右旋代码 *Code right rotation*	*Ø A*	*B*
090909184	84 (3.307)	6.3 (0.248)
090909189	89 (3.504)	8.8 (0.346)
090909194	94 (3.701)	11.3 (0.445)
090909199	99 (3.898)	13.8 (0.543)

100/220 固定顶尖端

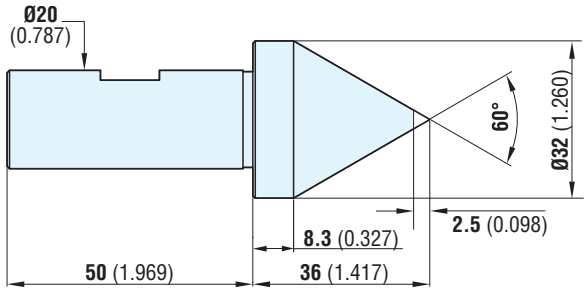

Fixed center point for 100/220

代码 *Code*
072102765

含插槽的 100/220 固定顶尖端

（适于大型顶尖或孔）

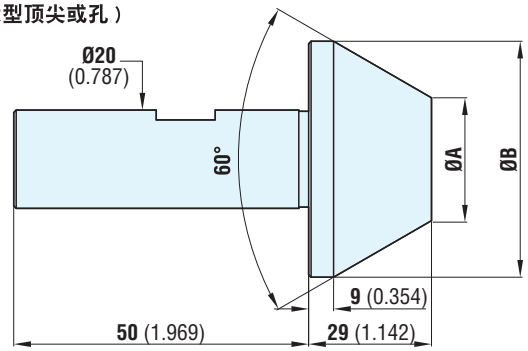

Fixed center points with slots for 100/220

(for large centers or holes)

含插槽的顶尖端代码 *Code centre points with slots*	含插槽的顶尖端尺寸 *Dimensions points with slots*		适于顶尖或“F”孔 *For centers or “F” holes*	
	Ø A	*Ø B*	（最小）/ *from Ø*	（最大）/ *to Ø*
171714019	25 (0.984)	48 (1.890)	28 (1.102)	47 (1.850)
171714020	42 (1.654)	65 (2.559)	39 (1.535)	64 (2.520)
171714021	60 (2.362)	83 (3.268)	57 (2.244)	82 (3.228)
171714022	78 (3.071)	101 (3.976)	75 (2.953)	100 (3.937)

含液压缸控制的固定顶尖端和传动销的法兰式端面驱动顶尖 180/300

FACE DRIVER 180/300 FLANGED, WITH FIXED CENTER POINT AND DRIVING PINS OPERATED BY HYDRAULIC CYLINDER

特性：

含液压缸控制的可互换固定顶尖端的端面驱动顶尖适合加工直径在 180mm（7.087 英寸）和 300mm（11.811 英寸）之间的轴，也可在车削中用于加工最大同心度误差为 0.020 的轴。

FEATURES:

This face driver with interchangeable fixed centre point hydraulically operated, is suitable for machining shafts of between 180 (inch 7.087) and 300 (inch 11.811) millimetres in diameter and it has been manufactured to obtain in turning too, machining of shafts with error of concentricity max 0.020.

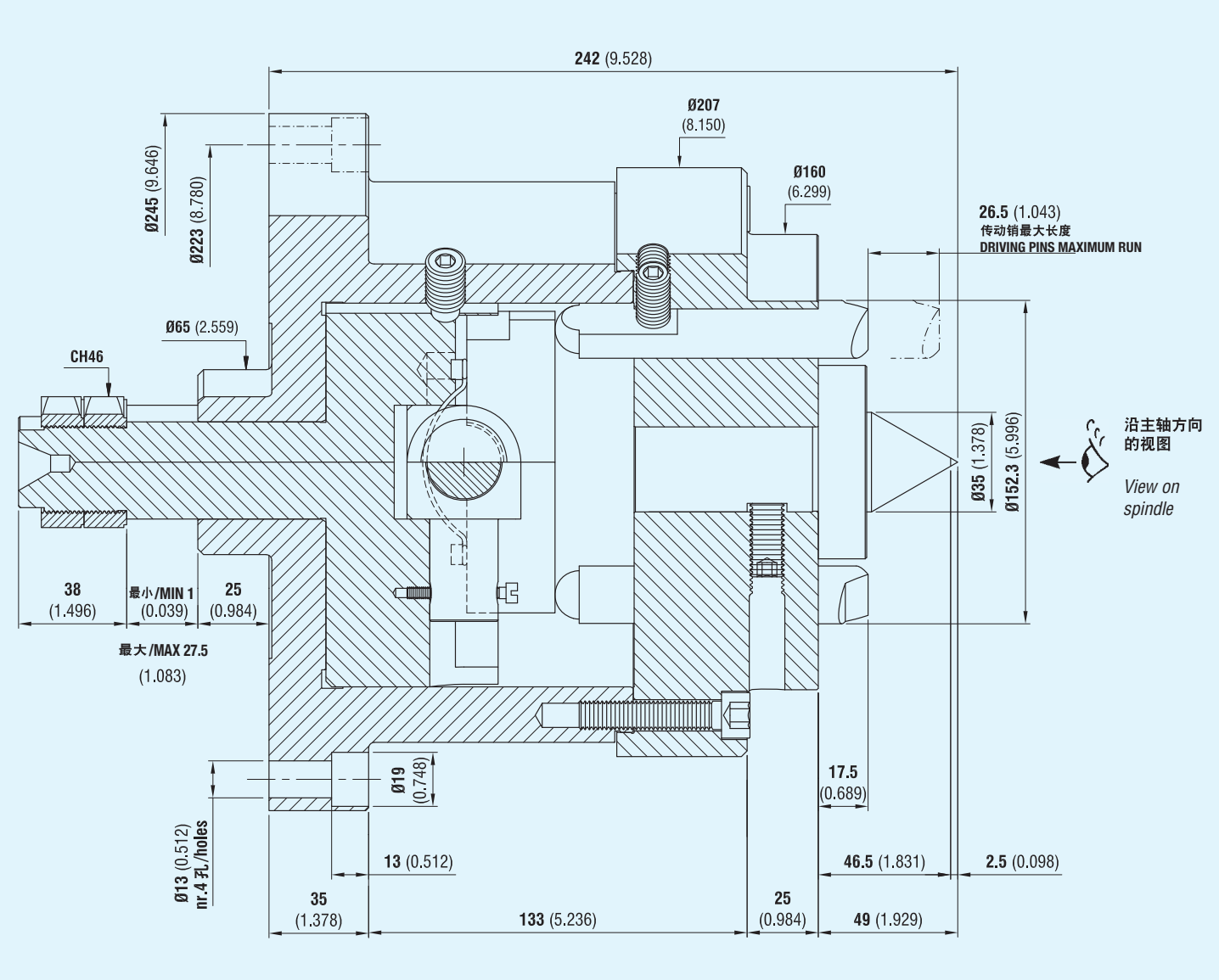

右旋代码 *Code right rotation*	左旋代码 *Code left rotation*
070760051	070760050

端面驱动顶尖 180/300 的备件

SPARE PARTS FOR FACE DRIVER 180/300

备件

180/300 传动销

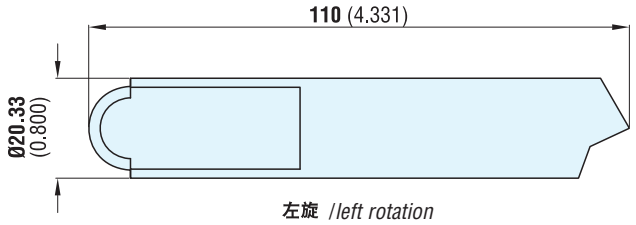

SPARE PARTS

Driving pins for 180/300

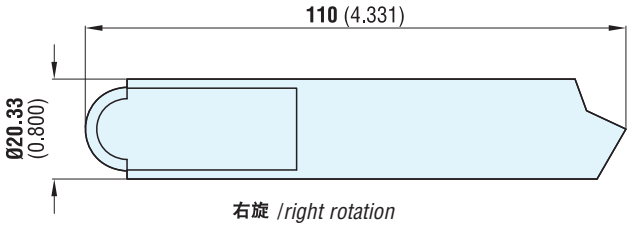

左旋代码 *Code left rotation*	右旋代码 *Code right rotation*
080810212	080810213

180/300 低位传动销

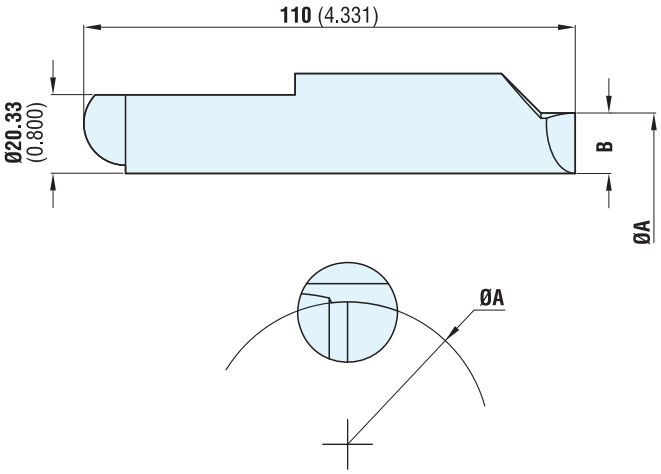

Lowered driving pins for 180/300

左旋代码 *Code left rotation*	*Ø A*	*B*
090900084	124 (4.882)	6.2 (0.244)
090900089	129 (5.079)	8.7 (0.343)
090900094	134 (5.276)	11.2 (0.441)
090900099	139 (5.472)	13.7 (0.539)

右旋代码 *Code right rotation*	*Ø A*	*B*
090901084	124 (4.882)	6.2 (0.244)
090901089	129 (5.079)	8.7 (0.343)
090901094	134 (5.276)	11.2 (0.441)
090901099	139 (5.472)	13.7 (0.539)

180/300 固定顶尖端

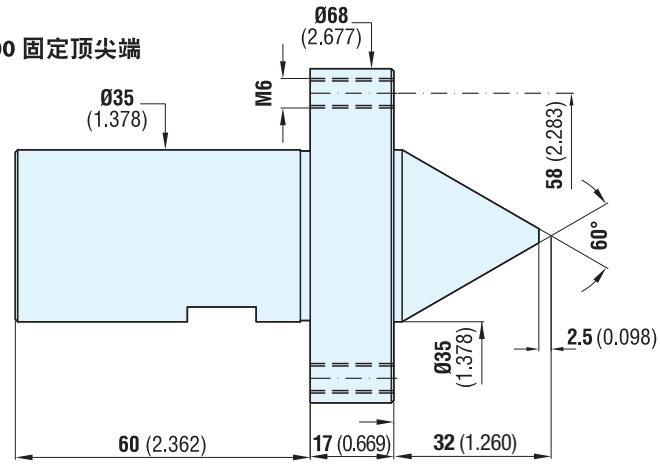

Fixed center point for 180/300

代码 *Code*
072102763

按要求提供 / *Available on request*

含插槽的 180/300 固定顶尖端

（适于大型顶尖或孔）

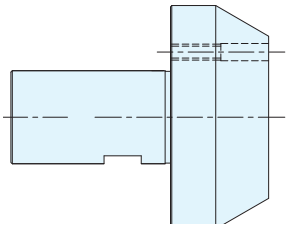

Fixed center point with slots for 180/300

(for large centers or holes)

含固定传动齿的轴及管道齿轮切削机的端面驱动顶尖标准

FACE DRIVERS STANDARD FOR GEAR CUTTING MACHINES WITH FIXED DRIVING TEETH, FOR GEAR CUTTING OF SHAFTS AND PIPES

技术特性:

含固定转动齿轮切削机端面驱动顶尖和独立回缩式顶尖端特别适于轴的齿轮切削，而且它们可用于加工每种顶尖齿轮。

其主体由防水，高韧度高硬度的钢（X210 Cr13 KU）制成。

主题上的传动齿已被加工并随时可用于再磨削。顶尖端已经过淬火。

TECHNICAL FEATURES:

The face drivers for gear cutting machines with fixed driving teeth and indipendent and retractable center point, are especially suitable for gear cutting of shafts and they can be used to machine every kind of centered gears.

The main body is made of steel (X210 Cr13 KU) and has high toughness, waterproof and hardness degree.

The teeth have been machined on the integral body and are always regrindable. The center point is hardened.

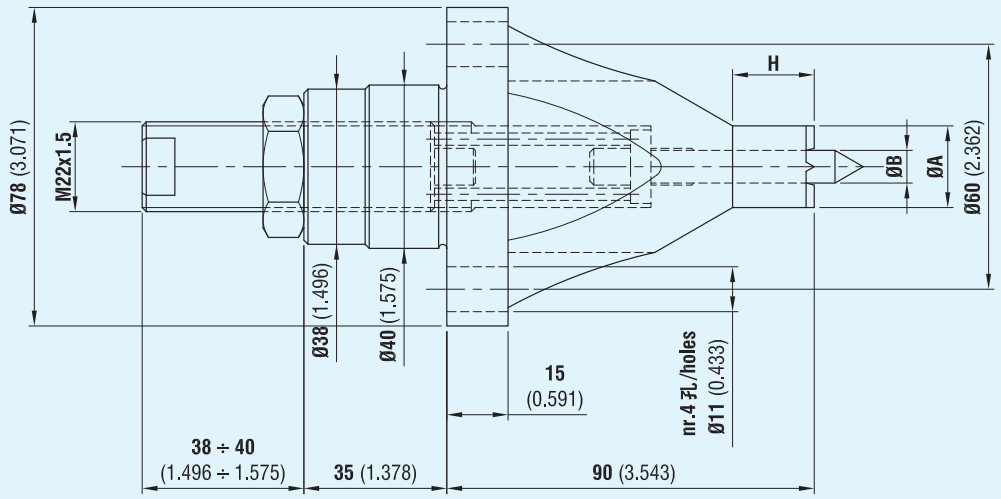

代码 *Code*	*Ø A*		*Ø B*		*H*	
060600451	13	(0.512)	6	(0.236)	15	(0.591)
060600452	20	(0.787)	8	(0.315)	20	(0.787)
060600456	30	(1.181)	14	(0.551)	20	(0.787)
060600453	40	(1.575)	18	(0.709)	20	(0.787)

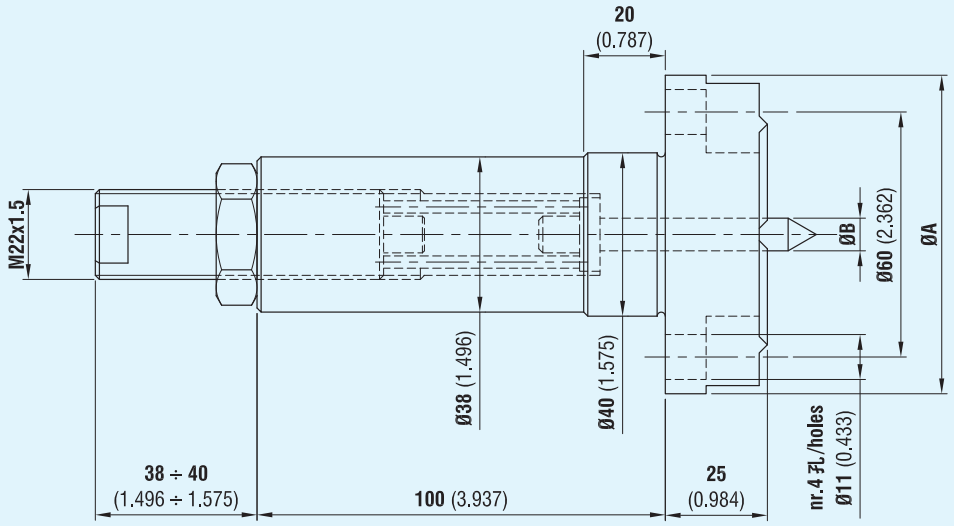

代码 *Code*	*Ø A*		*Ø B*	
060600454	78	(3.071)	8	(0.315)
060600455	78	(3.071)	18	(0.709)

齿轮切削操作专用端面驱动顶尖的实例

EXAMPLES OF SPECIAL FACE DRIVERS MANUFACTURED FOR GEAR CUTTING OPERATIONS

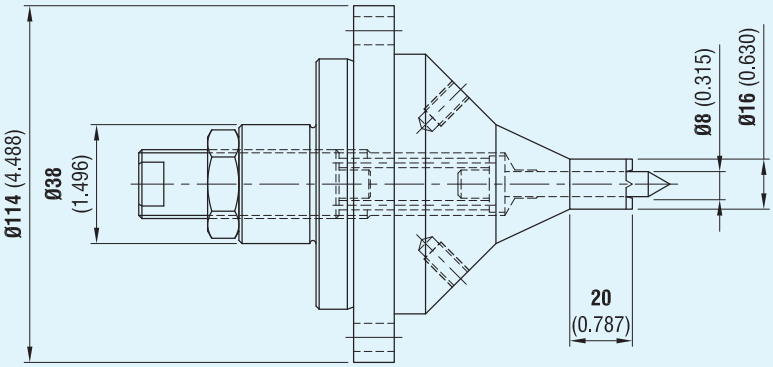

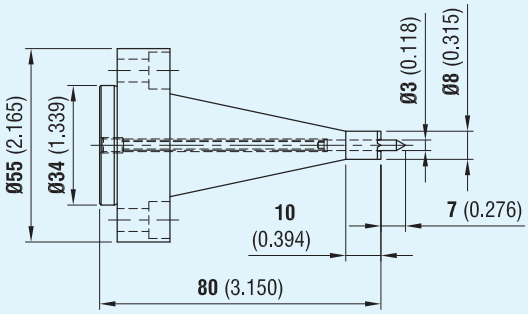

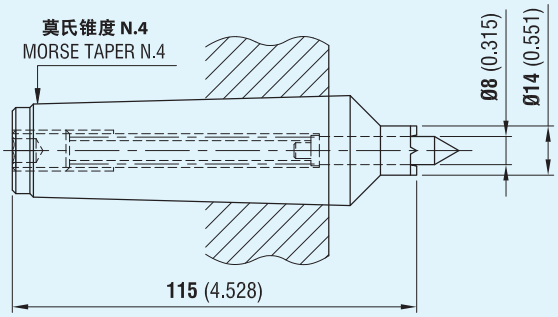

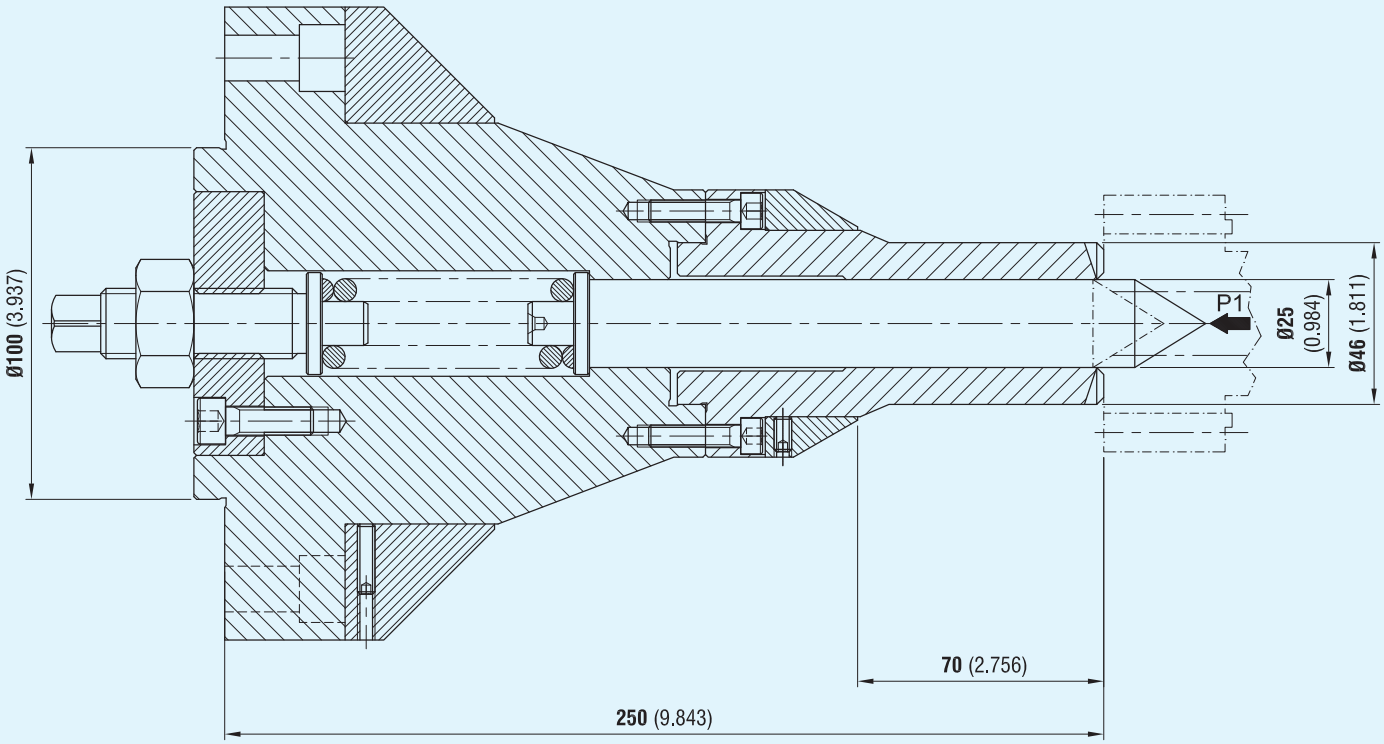

含法兰连接和自动调节可互换传动销的端面驱动顶尖 15/55

FACE DRIVER 15/55 WITH FLANGE ATTACHMENT AND SELF ADJUSTABLE INTERCHANGEABLE DRIVING PINS

技术特性：

该端面驱动顶尖适于加工规格为 Φ15（0.591 英寸）~ Φ70 mm（2.756 英寸）的零件。只能在活顶尖侧对规格为 Φ15（0.591 英寸）~ 31 mm（1.220 英寸）的零件进行齿轮切削；也可在端面驱动顶尖侧对规格为 Φ31（1.220 英寸）~ Φ70mm（2.756 英寸）的零件进行齿轮切削。

TECHNICAL FEATURES:

This face driver is suitable for machining parts from Ø15 (inch 0.591) to Ø70 mm (inch 2.756). For parts from Ø15 (inch 0.591) to Ø31 (inch 1.220) mm gear cutting is possible on live center side only; for parts from Ø31 (inch 1.220) to Ø70 (inch 2.756) mm gear cutting is possible also on face driver side.

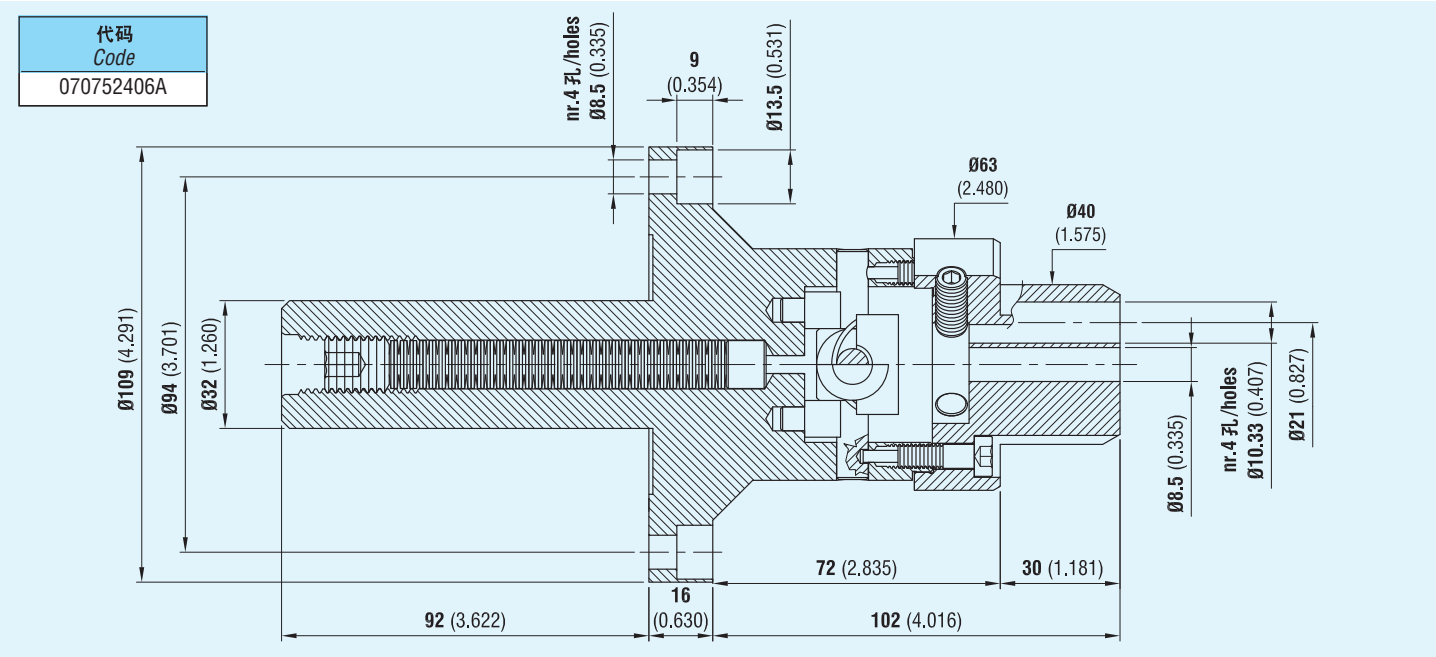

备件

15/55 双刀片传动销

SPARE PARTS

Driving pins with double blades for 15/55

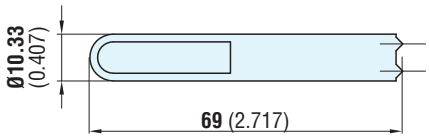

代码 *Code*
080809006

15/55 顶尖端

Center point for 15/55

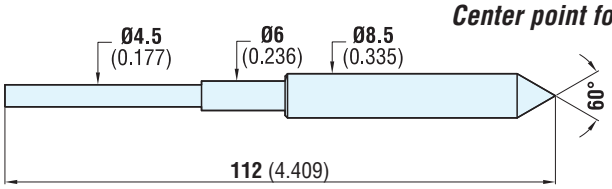

代码 *Code*
072102766

含插槽的 15/55 顶尖端

（适于大型顶尖或孔）

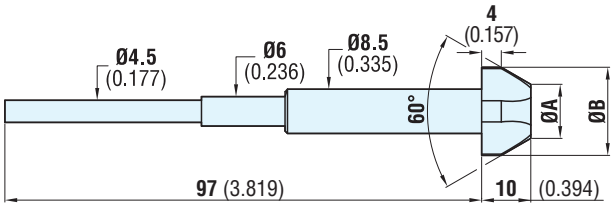

Center points with slots for 15/55

(for large centers or holes)

含插槽的顶尖端代码 *Code centre points with slots*	含插槽的顶尖端尺寸 *Dimensions points with slots*		适于顶尖或“F”孔 *For centers or “F” holes*	
	Ø A	*Ø B*	（最小）/ *from Ø*	（最大）/ *to Ø*
171711015	5 (0.197)	12 (0.472)	7.5 (0.295)	10.5 (0.413)
171711016	8 (0.315)	15 (0.591)	10.5 (0.413)	13.5 (0.531)
171711017	11 (0.433)	18 (0.709)	13.5 (0.531)	16.5 (0.650)
171711019	14 (0.551)	21 (0.827)	16.5 (0.650)	19.5 (0.768)
171711020	17 (0.669)	24 (0.945)	19.5 (0.768)	22.5 (0.886)
171711022	20 (0.787)	27 (1.063)	22.5 (0.886)	25.5 (1.004)

有关操作说明，请参见第 41 页

For operating instructions, see page. 41

含法兰连接和自动调节可互换传动销的端面驱动顶尖 20/70

FACE DRIVER 20/70 WITH FLANGE ATTACHMENT AND SELF ADJUSTABLE INTERCHANGEABLE DRIVING PINS

技术特性：

该端面驱动顶尖适于加工规格为 Φ20（0.787 英寸）~ Φ100 mm（3.937 英寸）的零件。只能在活顶尖侧对规格为 Φ20（0.787 英寸）~ Φ42 mm（1.654 英寸）的零件进行齿轮切削；也可在端面驱动顶尖侧对规格为 Φ42（1.654 英寸）~ Φ100mm（3.937 英寸）的零件进行齿轮切削。

TECHNICAL FEATURES:

This face driver is suitable for machining parts from Ø20 (inch 0.787) to Ø100 mm (inch 3.937). For parts from Ø20 (inch 0.787) to Ø42 (inch1.654) mm gear cutting is possible on live center side only; for parts from Ø42 (inch1.654) to Ø100 (inch 3.937) mm gear cutting is possible also on face driver side.

代码 *Code*
070760030A

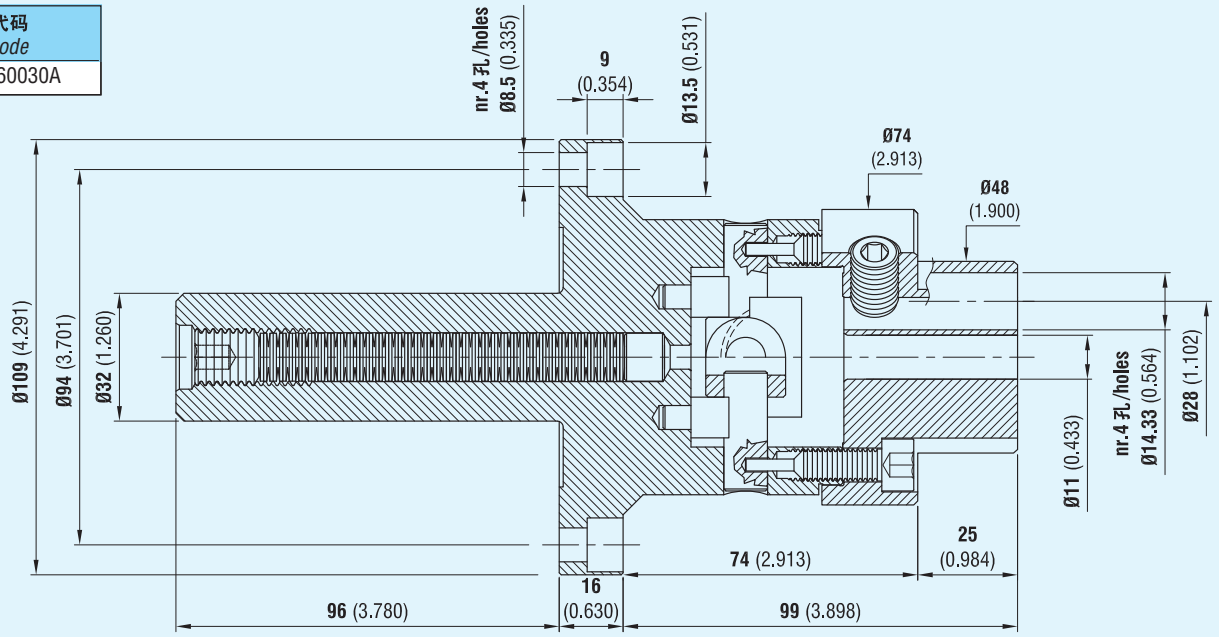

备件

SPARE PARTS

20/70 双刀片传动销

Driving pins with double blades for 20/70

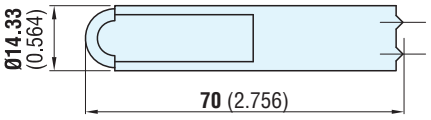

代码 *Code*
080809007

20/70 顶尖端

Center point for 20/70

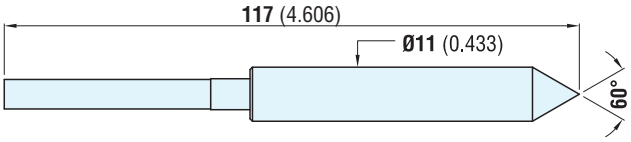

代码 *Code*
072102756

含插槽的 20/70 顶尖端

（适于大型顶尖或孔）

Center points with slots for 20/70

(for large centers or holes)

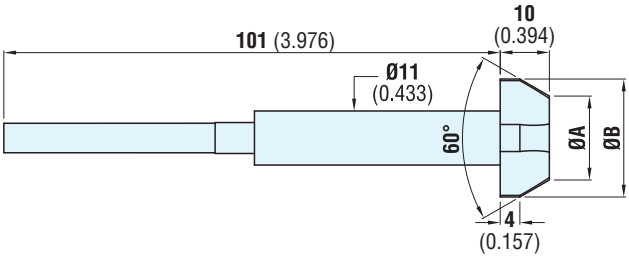

含插槽的顶尖端代码 *Code centre points with slots*	含插槽的顶尖端尺寸 *Dimensions points with slots*		适于顶尖或“F”孔 *For centers or “F” holes*	
	Ø A	*Ø B*	（最小）/ *from Ø*	（最大）/ *to Ø*
171712010	8 (0.315)	15 (0.591)	10.5 (0.413)	13.5 (0.531)
171712011	11 (0.433)	18 (0.709)	13.5 (0.531)	16.5 (0.650)
171712012	14 (0.551)	21 (0.827)	16.5 (0.650)	19.5 (0.768)
171712013	17 (0.669)	24 (0.945)	19.5 (0.768)	22.5 (0.886)
171712014	20 (0.787)	27 (1.063)	22.5 (0.886)	25.5 (1.004)
171712015	23 (0.906)	30 (1.181)	25.5 (1.004)	28.5 (1.122)
171712016	26 (1.024)	33 (1.299)	28.5 (1.122)	31.5 (1.240)
171712017	29 (1.142)	36 (1.417)	31.5 (1.240)	34.5 (1.358)

有关操作说明，请参见第 41 页

For operating instructions, see page. 41

含法兰连接和自动调节可互换传动销的端面驱动顶尖 45/150

FACE DRIVER 45/150 WITH FLANGE ATTACHMENT AND SELF ADJUSTABLE INTERCHANGEABLE DRIVING PINS

技术特性：

该端面驱动顶尖适于加工规格为 Φ45（1.772 英寸）~ Φ150 mm（5.906 英寸）的零件。只能在活顶尖侧对规格为 Φ45（1.772 英寸）~ Φ75 mm（2.953 英寸）的零件进行齿轮切削；也可在端面驱动顶尖侧对规格为 Φ75（2.953 英寸）~ Φ150 mm（5.906 英寸）的零件进行齿轮切削。

TECHNICAL FEATURES:

This face driver is suitable for machining parts from Ø45 (inch 1.772) to Ø150 mm (inch 5.906). For parts from Ø45 (inch 1.772) to Ø75 mm (inch 2.953) gear cutting is possible on live center side only; for parts from Ø75 (inch 2.953) to Ø150 mm (inch 5.906) gear cutting is possible also on face driver side.

代码 *Code*
070760034A

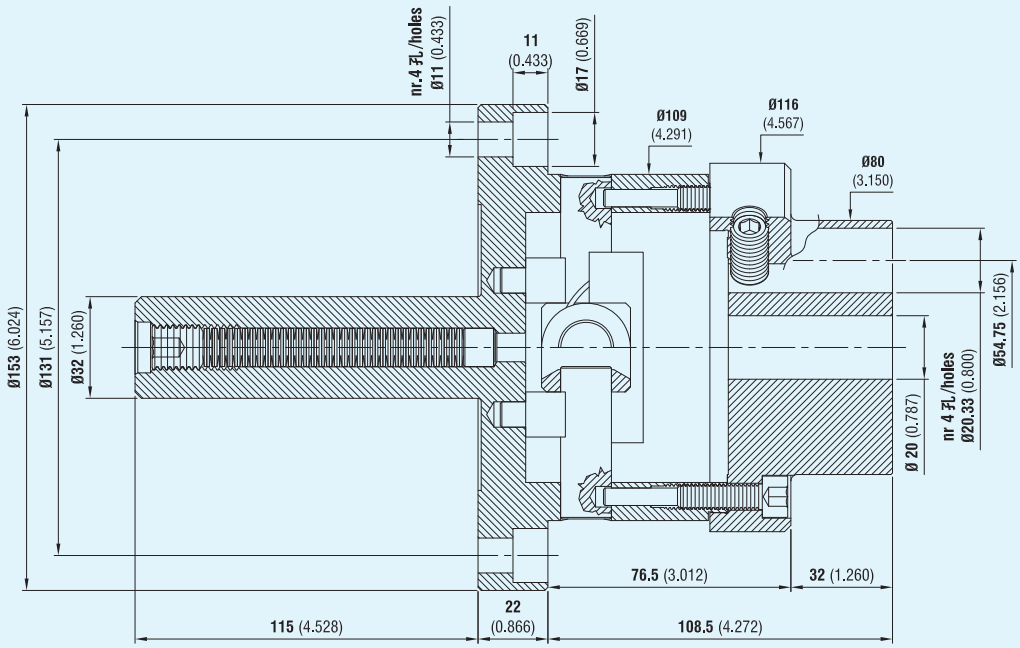

备件

SPARE PARTS

45/150 双刀片传动销

Driving pins with double blades for 45/150

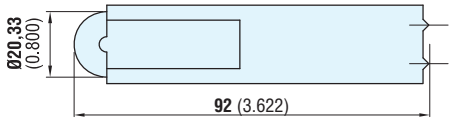

代码 *Code*
080809008

45/150 顶尖端

Center point for 45/150

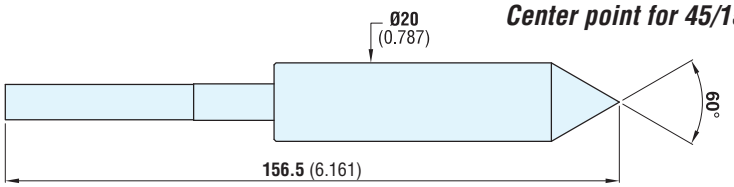

代码 *Code*
072102758

含插槽的 45/150 顶尖端

（适于大型顶尖或孔）

Center points with slots for 45/150

(for large centers or holes)

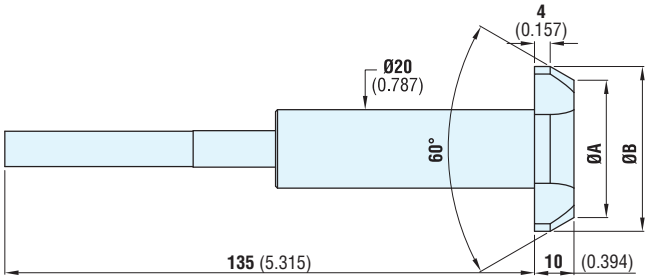

含插槽的顶尖端代码 *Code centre points with slots*	含插槽的顶尖端尺寸 *Dimensions points with slots*		适于顶尖或“F”孔 *For centers or “F” holes*	
	Ø A	*Ø B*	（最小）/ *from Ø*	（最大）/ *to Ø*
171713020	14 (0.551)	21 (0.827)	16.5 (0.650)	19.5 (0.768)
171713021	17 (0.669)	24 (0.945)	19.5 (0.768)	22.5 (0.886)
171713022	20 (0.787)	27 (1.063)	22.5 (0.886)	25.5 (1.004)
171713023	23 (0.906)	30 (1.181)	25.5 (1.004)	28.5 (1.122)
171713024	26 (1.024)	33 (1.299)	28.5 (1.122)	31.5 (1.240)
171713025	29 (1.142)	36 (1.417)	31.5 (1.240)	34.5 (1.358)
171713026	32 (1.260)	39 (1.535)	34.5 (1.358)	37.5 (1.476)
171713027	35 (1.378)	42 (1.654)	37.5 (1.476)	40.5 (1.594)
171713028	38 (1.496)	45 (1.772)	40.5 (1.594)	43.5 (1.713)
171713029	41 (1.614)	48 (1.890)	43.5 (1.713)	46.5 (1.831)
171713030	44 (1.732)	51 (2.008)	46.5 (1.831)	49.5 (1.949)

有关操作说明，请参见第 41 页

For operating instructions, see page. 41

管道驱动顶尖

DRIVERS FOR PIPES

含莫氏锥度配件的孔直径为 7 (0.276 英寸) ~ 40 (1.575 英寸) 的管道驱动顶尖

Driver for pipes with 7 (inch 0.276) to 40 (inch 1.575) diameter holes with morse taper fitting

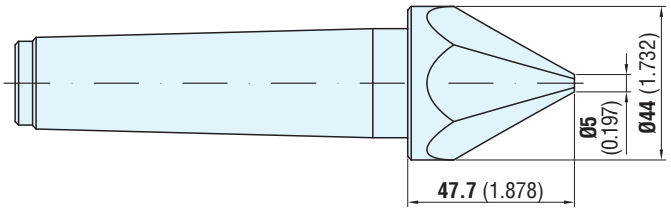

代码 *Code*	锥度 *Taper*	端面数 *Nr. Faces*
050528002	CM2	6
050528103	CM3	6
050528204	CM4	6
050528305	CM5	6

含圆柱柄的孔直径为 7 (0.276 英寸) ~ 40 (1.575 英寸) 的管道驱动顶尖

Driver for pipes with 7 (inch 0.276) to 40 (inch 1.575) diameter holes with cylindrical shank

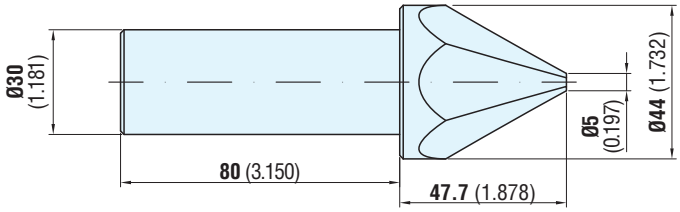

代码 *Code*	端面数 *Nr. Faces*
050528000	6

孔直径为 40 (1.575 英寸) ~ 245 (9.646 英寸) 的管道驱动顶尖

Driver for pipes with 40 (inch 1.575) to 245 (inch 9.646) diameter holes

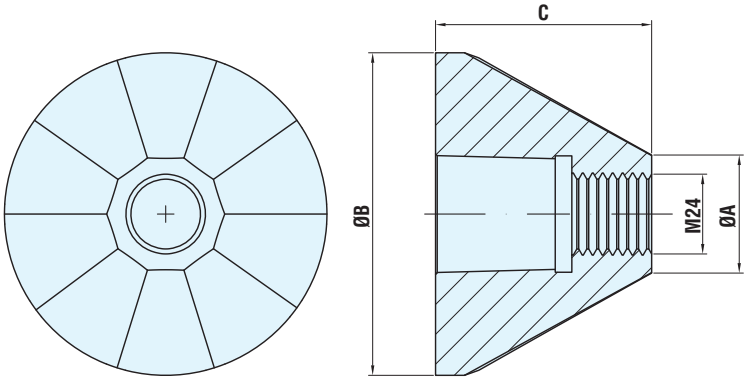

代码 *Code*	*Ø A*	*Ø B*	*C*	端面数 *Nr. Faces*
050500284	37 (1.457)	97 (3.819)	65 (2.559)	10
050500285	95 (3.740)	147 (5.787)	60 (2.362)	15
050500286	145 (5.709)	197 (7.756)	60 (2.362)	15
050500287	195 (7.677)	247 (9.724)	67 (2.638)	15

含莫氏锥度配件的管道驱动顶尖支撑柄

Support shank with morse taper fitting for pipe drivers

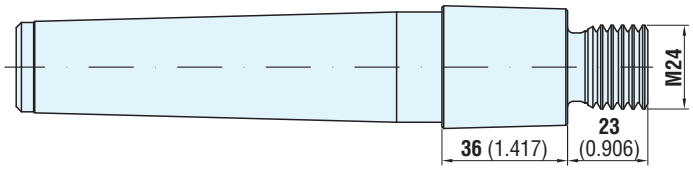

代码 *Code*	锥度 *Taper*
050500702	CM2
050500703	CM3
050500704	CM4
050500705	CM5

管道驱动顶尖圆柱支撑柄

Cylindrical support shank for pipe drivers

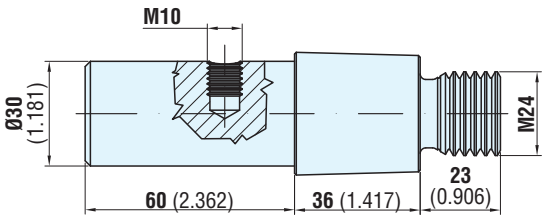

代码 *Code*
050500700

磨削端面驱动顶尖的使用和维护

USE AND MAINTENANCE OF THE FACE DRIVERS FOR GRINDING

圆度公差 = 0÷0.0015，偏心度公差 = 0÷0.0025

我们可确保满足关于本系列端面驱动顶尖的所有技术建议。可将其用来传动不超过 HRC 63 的硬化轴以及非硬化轴。来自活顶尖侧的 90 Kg 轴向推力便足以传动轴（我们也提供活顶尖，以便让轴的圆度处于千分之一或千分之零点五的范围内）。
示例：对直径范围在 5 mm 至 7 mm 的轴，来自活顶尖侧的 90 Kg 轴向推力便足够。端面驱动顶尖配备有整体平衡类自补偿装置（是我们的专利系统，也用在我们的端面驱动顶尖上，用于轴的车削）。
该系统可实现传动销的高灵敏度自动补偿。因此，端面驱动顶尖在轴上具有显著的传动及同心度能力。

WITH ROUNDNESS TOLERANCE = 0÷0.0015
AND ECCENTRICITY TOLERANCE = 0÷0.0025

We are sure of meeting any technical suggestions that may come up with our range of face drivers, for driving hardened shafts of up to HRC 63 and non-hardened shafts too. A 90 Kg axial thrust from the live center side is sufficient to drive the shaft (we supply also the live center to obtain shaft roundness within one thousandths and a half).
Example: for shafts in the diameter range from 5 mm to 7 mm, a 90 Kg axial thrust from live centre's side is sufficient. The face driver has an integrated balance-type self-compensating system (this is our patented system, which we also use on our face drives for shaft turning).

This system enables highly sensitive self-compensation of the driving pins. As a result the face driver has considerable drive and concentricity capability on the shaft.

传动销垫圈顶尖轴

DRIVING PIN WASHER CENTERING SHAFT

代码 *Code*
012920001

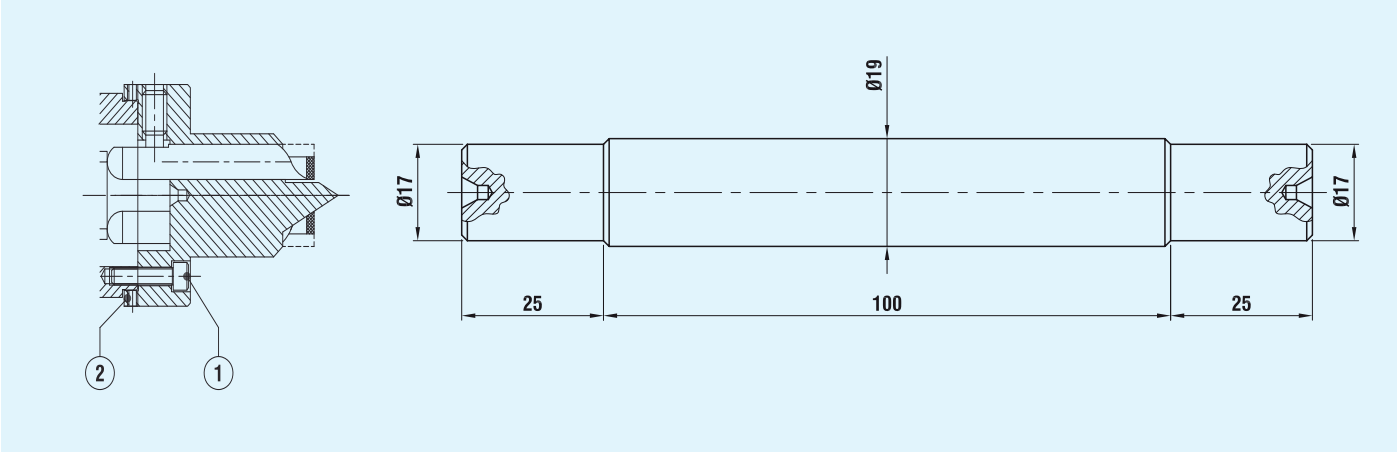

传动销垫圈定心说明
利用顶尖轴将端面驱动顶尖的中心点定位在中心千分之二范围内，在与待加工零件相同的轴向负载条件下，可将顶尖轴置于端面驱动顶尖和活顶尖之间。
然后用六角扳手稍稍松开位置1的螺栓（参见图片）以及顶尖轴端面驱动顶尖一侧的测微计-比较仪，并利用位置2的销钉将轴定心。在获得所需的定心之后，上紧螺钉（位置 1）。

INSTRUCTIONS FOR CENTERING THE DRIVING PIN WASHER
The centering shaft is used to center the face driver's centre point within 2 thousandths, putting the centering shaft between face driver and live centre in the same axial load conditions as those of the piece to be machined.
Then use an Allen wrench to slightly unloose the screws pos. 1 (see picture on the next page) and position the micrometer-comparator on the face driver side of the centering shaft and center the shaft by means of the dowels pos. 2. Once obtained centering required, tighten the screws (pos.1).

选择活顶尖和表面传动装置上轴向负载参数的说明

INSTRUCTIONS FOR SELECTING AXIAL LOAD PARAMETERS ON LIVE CENTERS AND FACE DRIVERS

对于轴 *FOR SHAFTS*		最大轴向推力 *MINIMUM AXIAL THRUST*		最小轴向推力 *MAXIMUM AXIAL THRUST*	
		传动销上 *On driving pins*	活顶尖上 *On live center*	传动销上 *On driving pins*	活顶尖上 *On live center*
从 Ø From Ø	到 Ø to Ø	kg.	kg.	kg.	kg.
5	9	50	70	80	110
10	15	60	90	100	150
16	30	70	100	150	220
31	50	100	150	200	300
51	100	150	220	250	370
101	200	200	300	350	800

注意：上述数值仅供参考，有可能随砂轮接触面积以及待加工材料的类型而发生变化。

N.B. *The above values are purely a guide-line and may vary according to grinding wheel contact area and type of material being machined.*

推力检查：

将工件锁紧在活顶尖和端面驱动顶尖之间以后，绝不要用手旋转零件来检查传动能力，这样一定会导致传动销硬化金属切边钝化。如果没有负载传感器（参见第 90页）或测力计进行检查，则可以将气动或液压缸的面积（将半径（cm）x半径 x 3.14）乘以汽缸压力（单位为 bar 或大气压）来得出推力值，单位为 kg。

THRUST CHECK:

After you have locked the workpiece between live center and face driver, do not, on any account, check driving capability by rotating the piece with your hand: this is certain to blunt the cutting edge in hardened metal of the driving pin. If you do not have a load cell (see page 90) or a dynamometer for these checks, you can obtain thrust values in kg by multiplying the area of the pneumatic or hydraulic cylinder (obtained by multiplying radius in cm x radius x 3.14) by the pressure of the cylinder in bar or atmospheres.

公式：

直径2（单位 cm） x π x压力（单位 为BAR 或大气压） =推力（单位 Kg）。

FORMULA:

Radius² *(in cm)* **xπx *Pressure*** *(in BAR or ATM)* **= *Thrust in Kg.***

关于定期维护的注释

· 每工作 1000 小时，要拆除传动销和中心点，仔细进行清洁，然后涂以“MOLYKOTE”润滑脂或适合的润滑脂。
重新安装传动销并且最终配合中心点。
还可以将端面驱动顶尖返给厂商进行维护和清洁。

NOTES ON SCHEDULED MAINTENANCE

- *Every 1000 working hours, remove driving pins and centre point, clean them carefully, and then grease them with "MOLYKOTE" grease or conformable grease.*
  Re -install the driving pins and finally fit the centre point.
  It is also possible to return the face drive to Tecnologie FRB for maintenance and cleaning.

含旋转加工头主轴的磨床液压缸或气缸控制式端面驱动顶尖 Φ12/70

FACE DRIVERS Ø 12/70 FOR GRINDING MACHINES WITH ROTATING HEAD SPINDLE, OPERATED BY HYDRAULIC OR PNEUMATIC CYLINDER

不含传动销和顶尖端的类型

Version without driving pins and center point

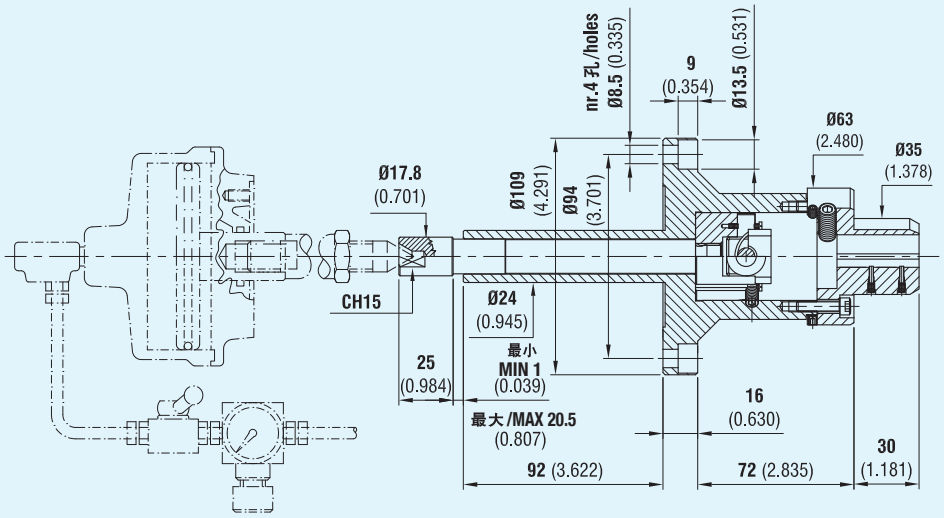

代码 - *Code*
070921060 A

不含传动销和顶尖端的类型

Version without driving pins and center point

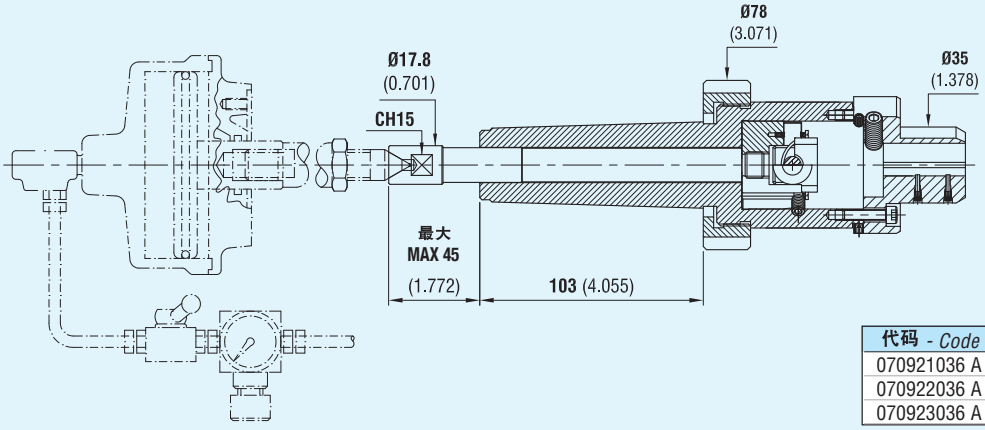

代码 - *Code*	莫氏锥度	*Morse Taper*
070921036 A	C.M.4	MT4
070922036 A	C.M.5	MT5
070923036 A	C.M.6	MT6

装有传动销和定尖端的传动轴类

Version with assembled center point and driving pins

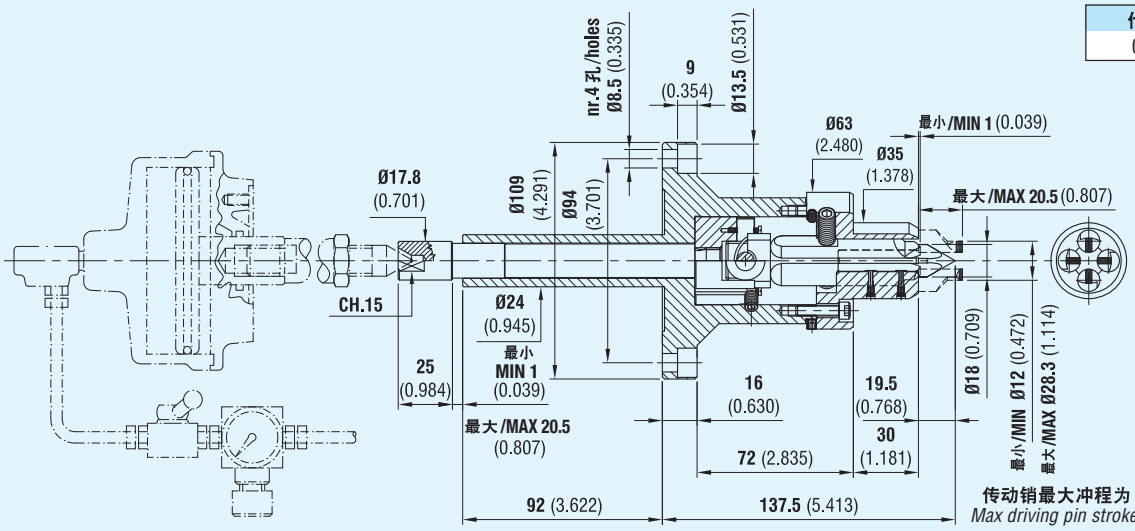

代码 - *Code*
070921066

传动销最大冲程为 19.5（0.768 英寸）
Max driving pin stroke 19.5 (inch 0.768)

装有传动销和定尖端的传动轴类

Version with assembled center point and driving pins

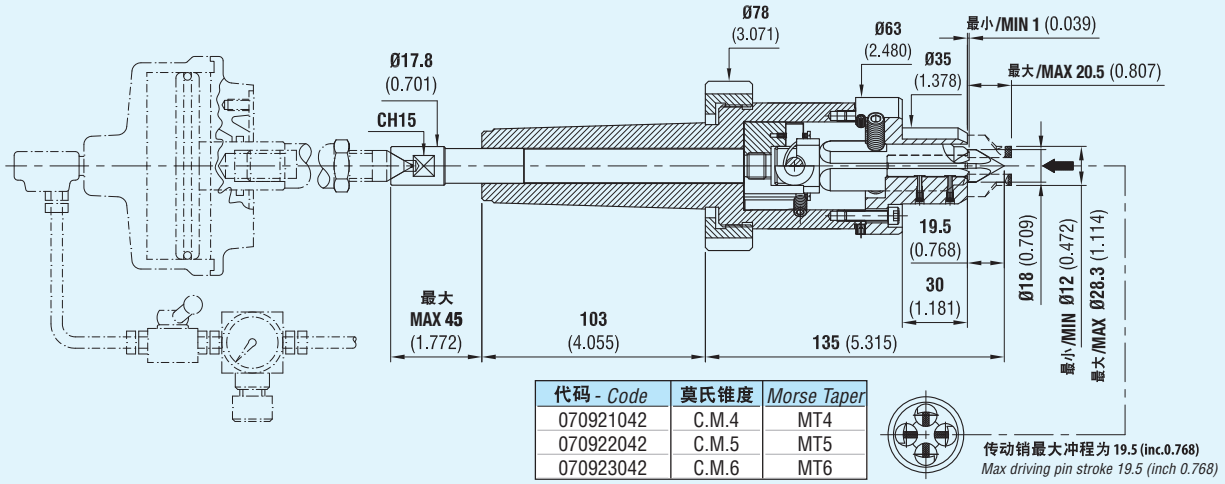

代码 - *Code*	莫氏锥度	*Morse Taper*
070921042	C.M.4	MT4
070922042	C.M.5	MT5
070923042	C.M.6	MT6

备件 / *SPARE PARTS*

端面驱动顶尖 Φ12/70 的传动销和顶尖端平面卡盘

Driving pins and center point face plate for face driver ø 12/70

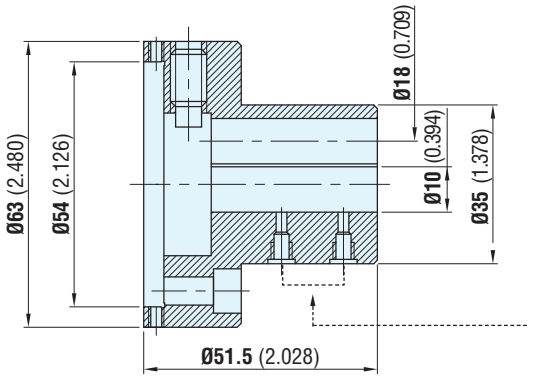

代码 - *Code*
072921104

螺丝代码 *Screw Code*
072920084

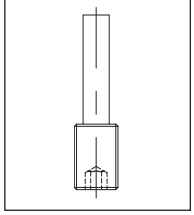

传动轴（Φ12~Φ70）硬质合金传动销

Driving pins with added hard metal for driving shafts from ø 12 to ø 70

代码 - *Code*
080920003

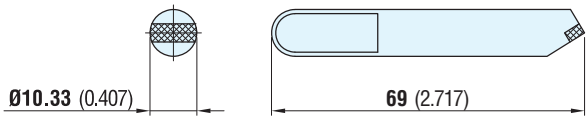

与顶尖（Φ2~Φ16）配套的固定顶尖端

Fixed center point for centers from ø 2 to ø 16

代码 - *Code*
072102768

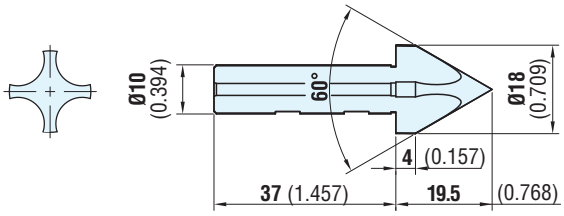

传动轴（Φ12~Φ70，降低后可使传动轮移动至端面驱动顶尖侧）硬质合金传动销（边缘减少）

Reduced edge driving pins with added hard metal for driving shafts from ø 12 to ø 70 lowered to permit the wheel to get out on face driver side

注：关于这些尺寸，请联系我们的技术部门

WARNING: *contact our technical department for these dimensions*

代码 *Codice*	*Ø A*	*B*
091920112	12 (0.472)	2.20 (0.087)
091920114	14 (0.551)	3.20 (0.126)
091920116	16 (0.630)	4.20 (0.165)
091920118	18 (0.709)	5.20 (0.205)
091920120	20 (0.787)	6.20 (0.244)
091920122	22 (0.866)	7.20 (0.283)
091920124	24 (0.945)	8.20 (0.323)
091920126	26 (1.024)	9.20 (0.362)

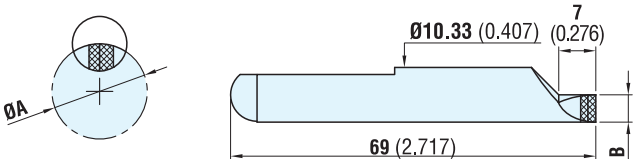

含插槽的与顶尖或孔（Φ14~Φ23）相配套的固定顶尖端

Fixed center point with slots for centers or holes from ø 14 to ø 23

代码 - *Code*
179200101

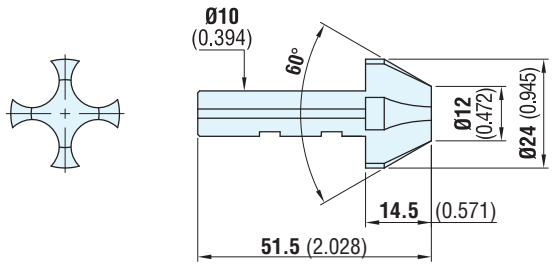

含旋转加工头主轴的磨床液压缸或气缸控制式
端面驱动顶尖 Φ15/75

FACE DRIVERS Ø 15/75 FOR GRINDING MACHINES WITH ROTATING HEAD SPINDLE, OPERATED BY HYDRAULIC OR PNEUMATIC CYLINDER

未装有传动销和定尖端的传动轴类 ***Version without driving pins and center point***

代码 - *Code*	莫氏锥度	*Morse Taper*
070921045 A	C.M.4	MT4
070922045 A	C.M.5	MT5
070923045 A	C.M.6	MT6

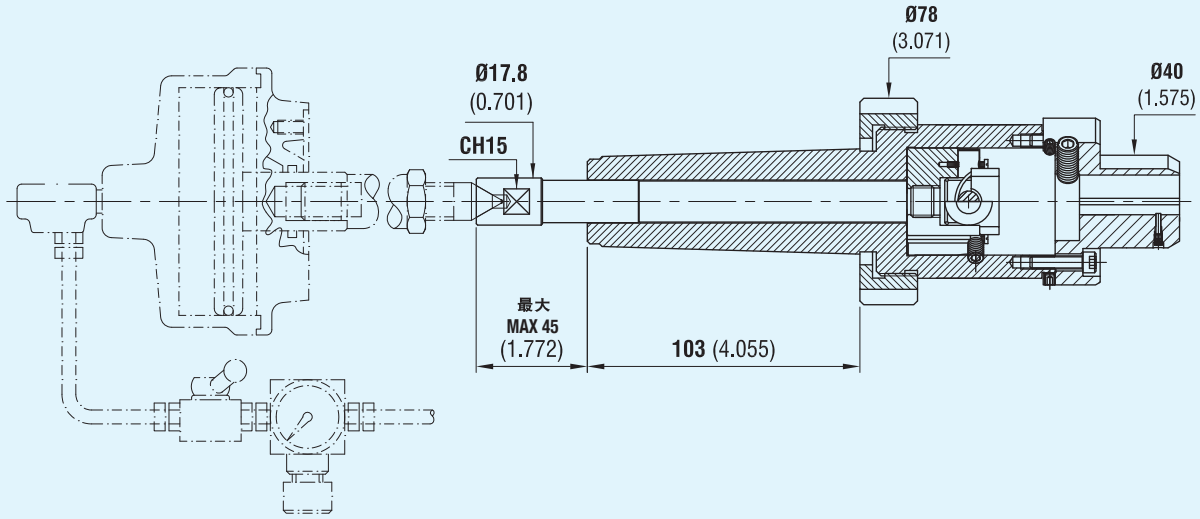

未装有传动销和定尖端的传动轴类 ***Version without driving pins and center point***

代码 - *Code*
070921067 A

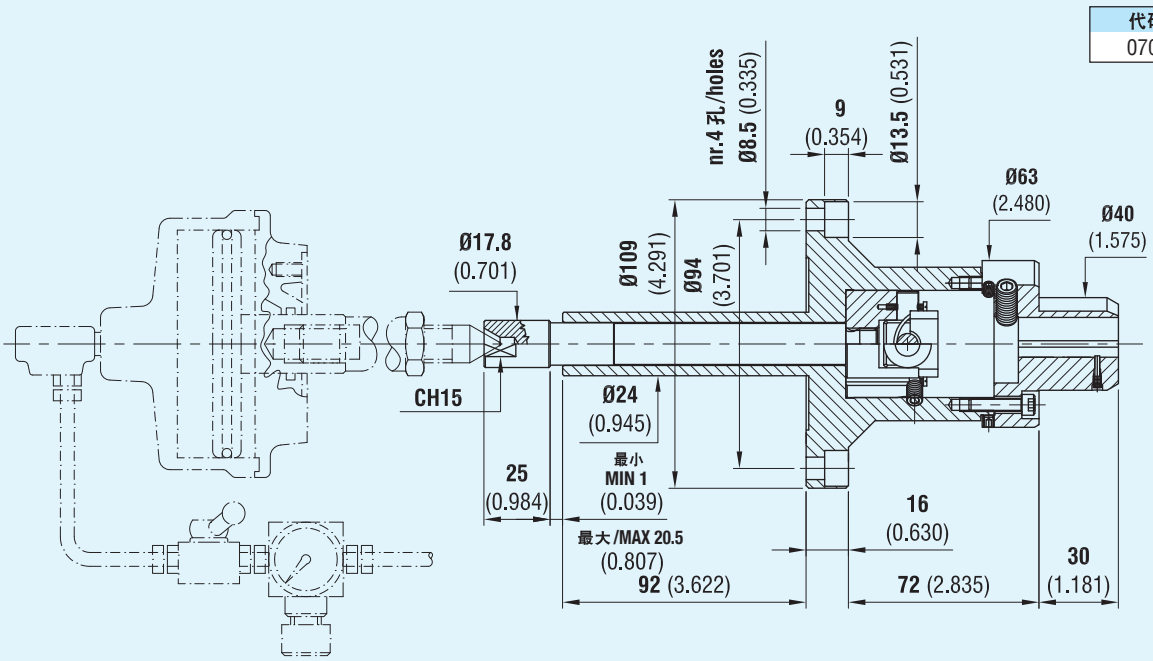

端面驱动顶尖 Φ15/75 的传动销和顶尖端平面卡盘

代码 - *Code*
072921301

Driving pins and center point face plate for face driver ø 15/75

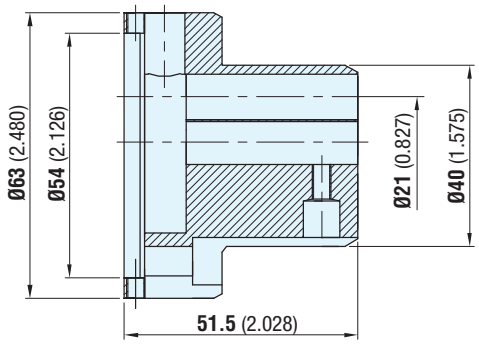

与顶尖（Φ2~Φ16）配套的固定顶尖端

FIXED center point for centers from ø 2 to ø 16

代码 - *Code*
072102769

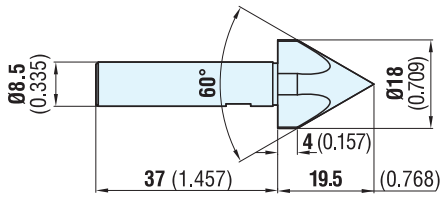

传动轴（Φ15~Φ75）硬质合金传动销

代码 - *Code*
080920003

Driving pins with added hard metal for driving shafts from ø 15 to ø 75

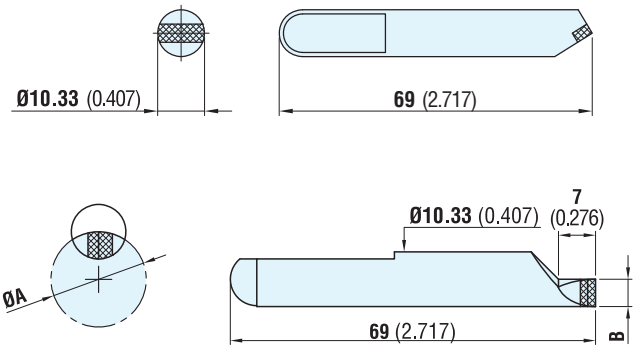

注：关于这些尺寸，请联系我们的技术部门

WARNING: *contact our technical department for these dimensions*

代码 - *Code*	*Ø A*	*B*
091920112	15 (0.591)	2.20 (0.087)
091920114	17 (0.669)	3.20 (0.126)
091920116	19 (0.748)	4.20 (0.165)
091920118	21 (0.827)	5.20 (0.205)
091920120	23 (0.906)	6.20 (0.244)
091920122	25 (0.984)	7.20 (0.283)
091920124	27 (1.063)	8.20 (0.323)
091920126	29 (1.142)	9.20 (0.362)

传动轴（Φ15~Φ75，降低后可使传动轮移动至端面驱动顶尖侧）硬质合金传动销（边缘减少）

Reduced edge driving pins with added hard metal for driving shafts from ø 15 to ø 75 lowered to permit the wheel to get out on face driver side

含插槽的固定顶尖端
（适于大型顶尖或孔）

Fixed center point with slots
(for large centers or holes)

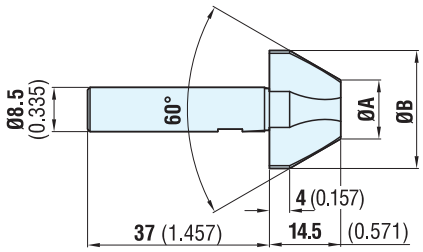

含插槽的顶尖端代码 *Code centre points with slots*	含插槽的顶尖端尺寸 *Dimensions points with slots*		适于顶尖或“F”孔 *For centers or “F” holes*	
	Ø A	*Ø B*	（最小）/ *from Ø*	（最大）/ *to Ø*
171711018	12 (0.472)	24 (0.945)	15 (0.591)	23 (0.906)
171711021	18 (0.709)	30 (1.181)	21 (0.827)	26 (1.024)

含旋转加工头主轴的磨床液压缸或气缸控制式端面驱动顶尖 Φ20/80

FACE DRIVERS Ø 20/80 FOR GRINDING MACHINES WITH ROTATING HEAD SPINDLE, OPERATED BY HYDRAULIC OR PNEUMATIC CYLINDER

未装有传动销和定尖端的传动轴类

Version without driving pins and center point

代码 - *Code*	莫氏锥度	*Morse Taper*
070921047 A	C.M.4	MT4
070922047 A	C.M.5	MT5
070923047 A	C.M.6	MT6

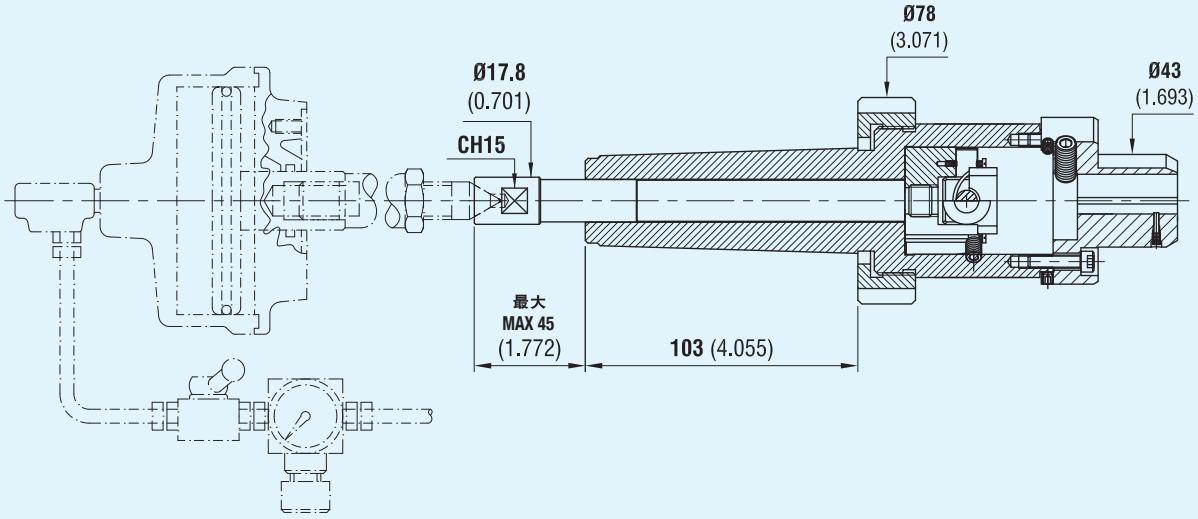

未装有传动销和定尖端的传动轴类

Version without driving pins and center point

代码 - *Code*
070921069 A

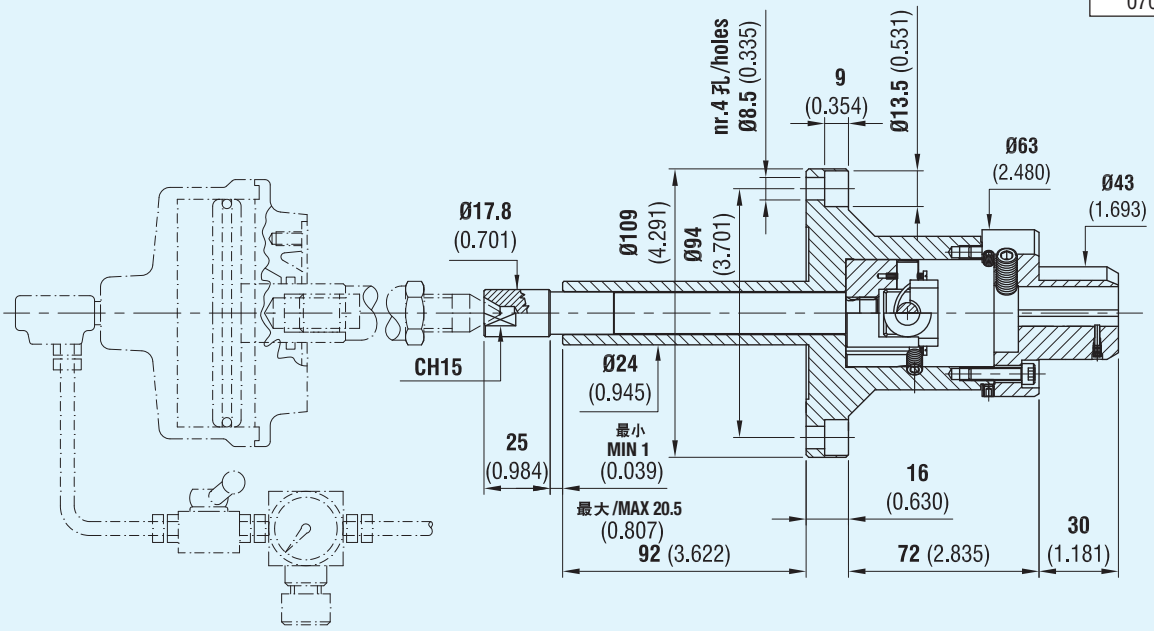

端面驱动顶尖 Φ20/80 传动销和顶尖端平面卡盘

Driving pins and center point face plate for face driver ø 20/80

代码 - *Code*
072921302

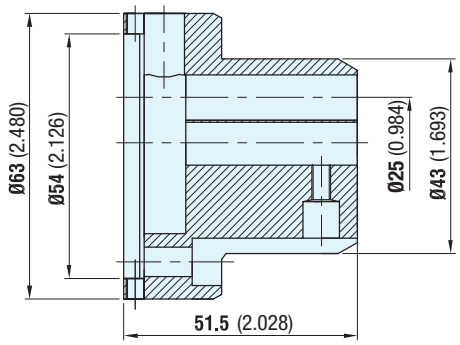

与顶尖（Φ2~Φ16）配套的固定顶尖端

FIXED center point for centers from ø 2 to ø 16

代码 - *Code*
072102770

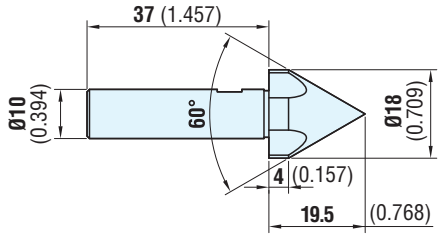

传动轴（Φ20~Φ80）硬质合金传动销

Driving pins with added hard metal for driving shafts from ø 20 to ø 80

代码- *Code*
080920003

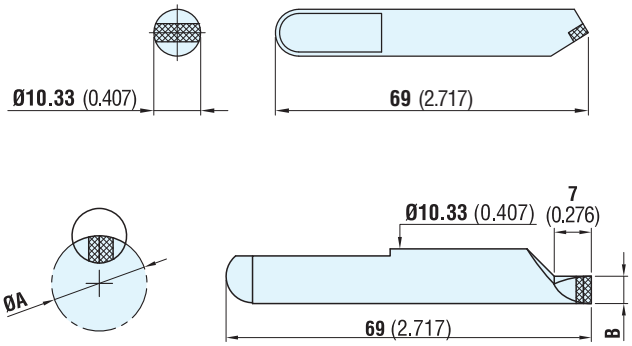

注：关于这些尺寸，请联系我们的技术部门

WARNING: *contact our technical department for these dimensions*

代码 - *Code*	*Ø A*	*B*
091920112	19 (0.748)	2.20 (0.087)
091920114	21 (0.827)	3.20 (0.126)
091920116	23 (0.906)	4.20 (0.165)
091920118	25 (0.984)	5.20 (0.205)
091920120	27 (1.063)	6.20 (0.244)
091920122	29 (1.142)	7.20 (0.283)
091920124	31 (1.220)	8.20 (0.323)
091920126	33 (1.299)	9.20 (0.362)

传动轴（Φ20~Φ80，降低后可使传动轮移动至端面驱动顶尖侧）硬质合金传动销（边缘减少）

Reduced edge driving pins with added hard metal for driving shafts from ø 15 to ø 75 lowered to permit the wheel to get out on face driver side

含插槽的固定顶尖端

（适于大型顶尖或孔）

Fixed center point with slots

(for large centers or holes)

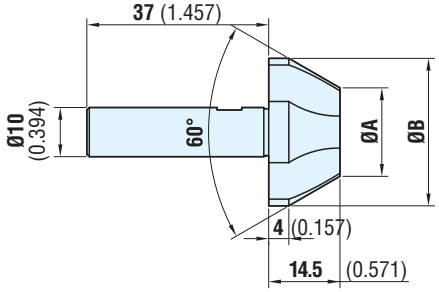

含插槽的顶尖端代码 *Code centre points with slots*	含插槽的顶尖端尺寸 *Dimensions points with slots*		适于顶尖或“F”孔 *For centers or “F” holes*	
	Ø A	*Ø B*	（最小）/ *from Ø*	（最大）/ *to Ø*
171712021	12 (0.472)	24 (0.945)	15 (0.591)	23 (0.906)
171712023	15 (0.591)	27 (1.063)	18 (0.709)	26 (1.024)
171712025	18 (0.709)	30 (1.181)	21 (0.827)	29 (1.142)
171712028	24 (0.945)	36 (1.417)	26 (1.024)	31 (1.220)

含旋转加工头主轴的磨床液压缸或气缸控制式端面驱动顶尖 Φ20/100

FACE DRIVERS Ø 20/100 FOR GRINDING MACHINES WITH ROTATING HEAD SPINDLE, OPERATED BY HYDRAULIC OR PNEUMATIC CYLINDER

未装有传动销和定尖端的传动轴类

Version without driving pins and center point

代码 - *Code*	莫氏锥度	*Morse Taper*
070921080 A	C.M.4	MT4
070922080 A	C.M.5	MT5
070923080 A	C.M.6	MT6

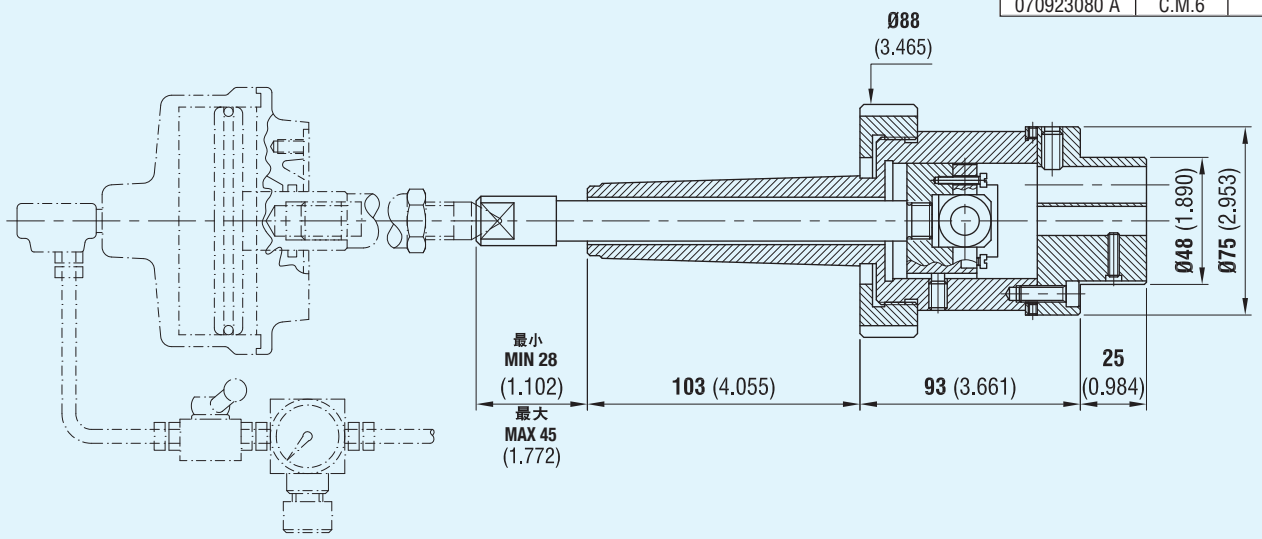

未装有传动销和定尖端的传动轴类

Version without driving pins and center point

代码 - *Code*
070921088 A

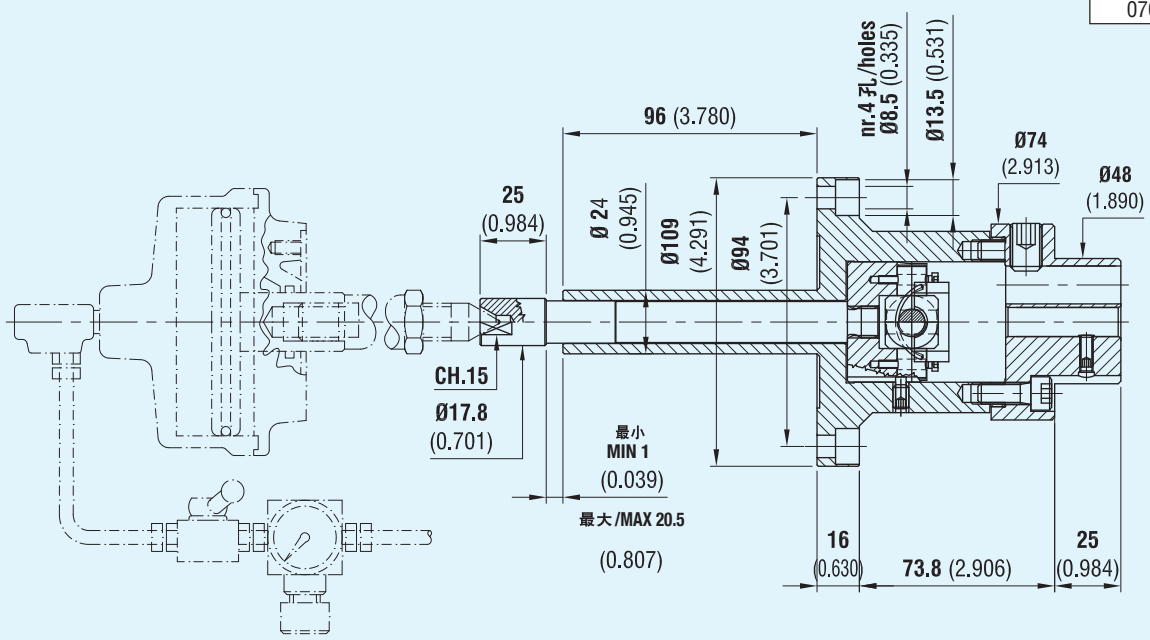

端面驱动顶尖 Φ20/100 的传动销和顶尖端平面卡盘

Driving pins and center point face plate for face driver ø 20/100

代码 - *Code*
072921203

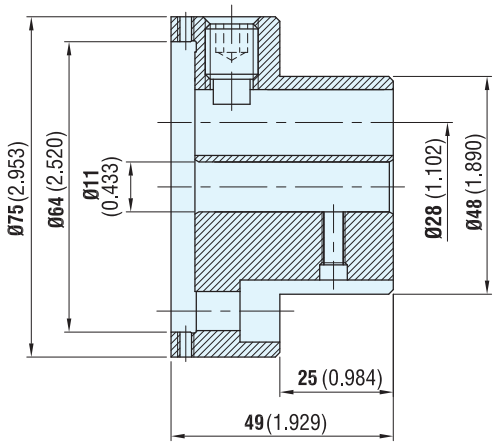

与顶尖（Φ2～Φ20）配套的固定顶尖端

Fixed center point for centers from ø 2 to ø 20

代码 - *Code*
072102771

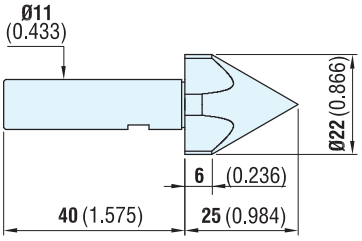

传动轴（Φ20~Φ100）硬质合金传动销

Driving pins with added hard metal for driving shafts from ø 20 to ø 100

代码 - *Code*
080920004

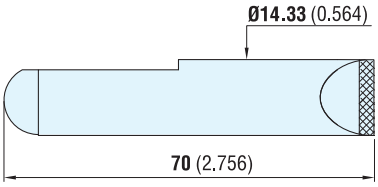

注：关于这些尺寸，请联系我们的技术部门

WARNING: *contact our technical department for these dimensions*

代码 - *Code*	Ø A	B
091920219	19 (0.748)	2.70 (0.106)
091920222	22 (0.866)	4.20 (0.165)
091920224	24 (0.945)	5.20 (0.205)
091920226	26 (1.024)	6.20 (0.244)
091920228	28 (1.102)	7.20 (0.283)
091920232	32 (1.260)	9.20 (0.362)
091920236	36 (1.417)	11.20 (0.441)

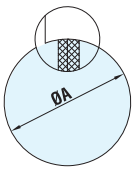

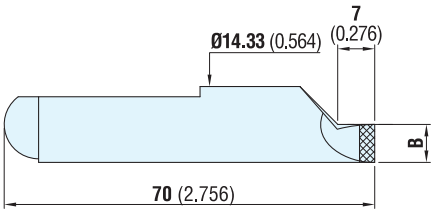

传动轴（Φ20~Φ100，降低后可使传动轮移动至端面驱动顶尖侧）硬质合金传动销（边缘减少）

Reduced edge driving pins with added hard metal for driving shafts from ø 20 to ø 100 lowered to permit the wheel to get out on face driver side

含插槽的与顶尖或孔（Φ19~Φ35）配套的固定顶尖端

Fixed center point with slots for centers or holes from ø 19 to ø 35

代码 *Code*	尺寸 *Dimensions*		适于顶尖或孔 *For centers or holes*	
	Ø A	*Ø B*	（最小）/ *from Ø*	（最大）/ *to Ø*
179200114	17 (0.669)	30 (1.181)	19 (0.748)	29 (1.142)
179200116	23 (0.906)	36 (1.417)	25 (0.984)	35 (1.378)

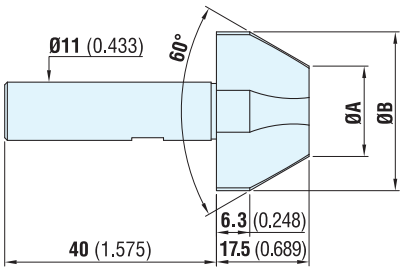

含旋转加工头主轴的磨床液压缸或气缸控制式
端面驱动顶尖 Φ45/150

FACE DRIVERS Ø 45/150 FOR GRINDING MACHINES WITH ROTATING HEAD SPINDLE, OPERATED BY HYDRAULIC OR PNEUMATIC CYLINDER

未装有传动销和定尖端的传动轴类 ***Version without driving pins and center point***

代码 - *Code*	莫氏锥度	*Morse Taper*
070921092 A	C.M.5	MT5
070922092 A	C.M.6	MT6

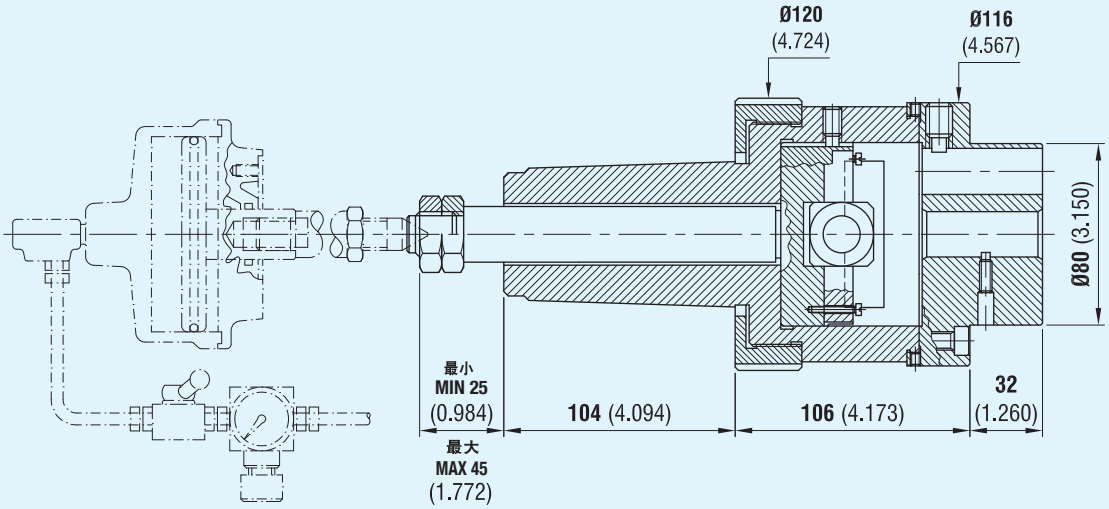

未装有传动销和定尖端的传动轴类 ***Version without driving pins and center point***

代码 - *Code*
070921096 A

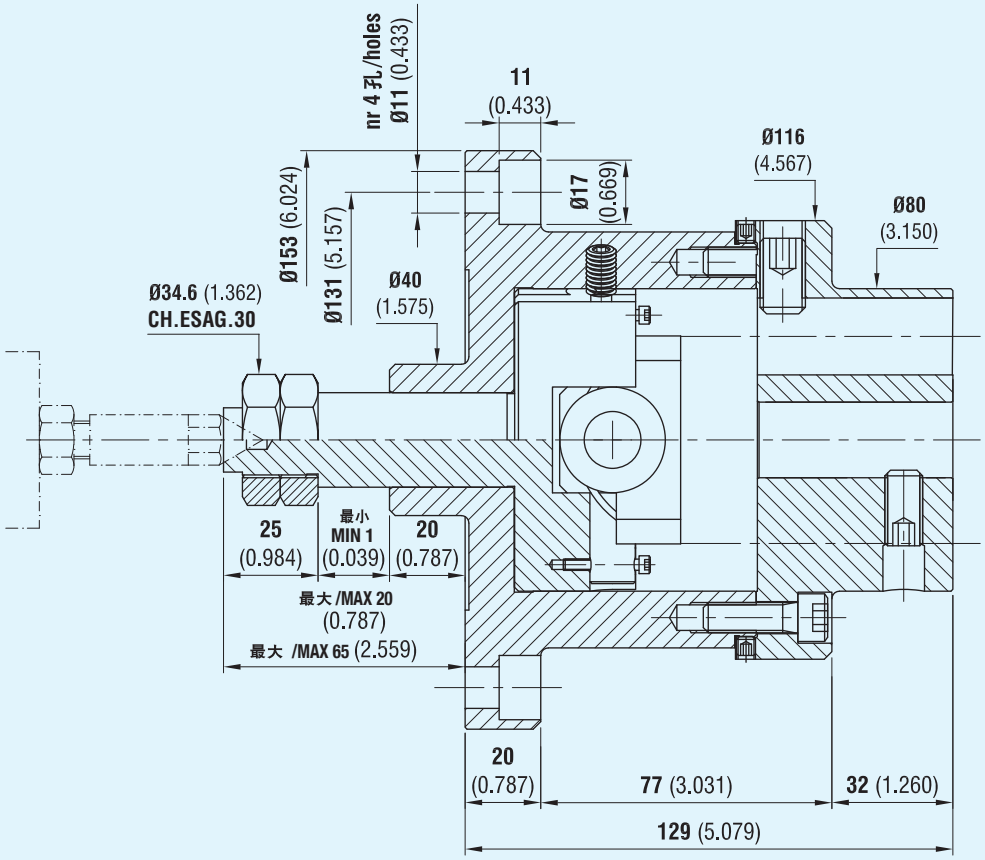

SPARE PARTS FOR FACE DRIVER Ø 45/150

端面驱动顶尖 Φ45/150 的传动销和顶尖端平面卡盘

Driving pins and center point face plate for face driver ø 45/150

代码 - *Code*
072921205

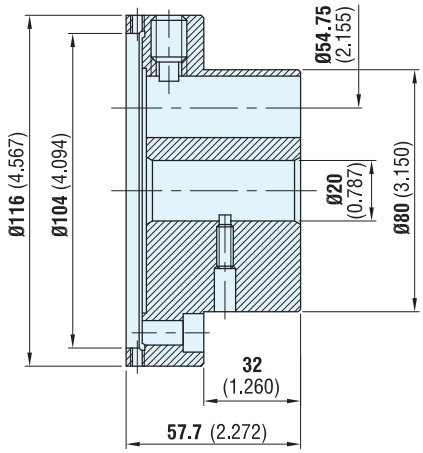

与顶尖（Φ3~Φ18）配套的固定顶尖端

Fixed center point for centers from ø 3 to ø 18

代码 - *Code*
072920104

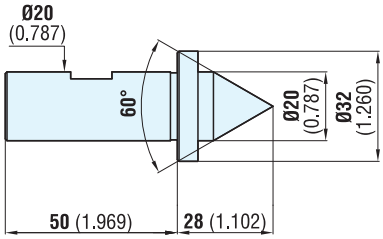

传动轴（Φ45~Φ150）硬质合金传动销

Driving pins with added hard metal for driving shafts from ø 45 to ø 150

代码 - *Code*
080920005

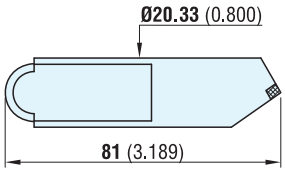

传动轴（Φ45~Φ150，降低后可使传动轮移动至端面驱动顶尖侧）硬质合金传动销（边缘减少）

代码 - *Code*	*Ø A*	*B*
091920344	44 (1.732)	4.8 (0.189)
091920350	50 (1.969)	7.8 (0.307)
091920355	55 (2.165)	10.3 (0.406)
091920360	60 (2.362)	12.8 (0.504)
091920365	65 (2.559)	15.3 (0.602)

Reduced edge driving pins with added hard metal for driving shafts from ø 45 to ø 150 lowered to permit the wheel to get out on face driver side

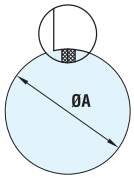

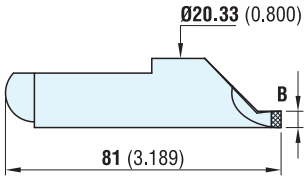

含插槽的与顶尖或孔（Φ18~Φ71）配套的固定顶尖端

Fixed center point with slots for centers or holes from ø 18 to ø 71

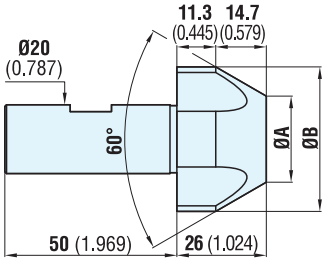

代码 *Code*	尺寸 *Dimensions*		适于顶尖或孔 *For centers or holes*	
	Ø A	*Ø B*	（最小）/ *from Ø*	（最大）/ *to Ø*
171713031	15 (0.591)	32 (1.260)	18 (0.709)	31 (1.220)
171713032	25 (0.984)	42 (1.654)	28 (1.102)	41 (1.614)
171713033	35 (1.378)	52 (2.047)	38 (1.496)	51 (2.008)
171713034	45 (1.772)	62 (2.441)	48 (1.890)	61 (2.402)
171713035	55 (2.165)	72 (2.835)	58 (2.283)	71 (2.795)

含旋转加工头主轴的磨床液压缸或气缸控制式端面驱动顶尖 Φ100/300 和 Φ180/400（配法兰配件和可互换固定顶尖端）

FACE DRIVERS Ø 100/300 AND Ø 180/400 FOR GRINDING MACHINES WITH ROTATING HEAD SPINDLE, OPERATED BY HYDRAULIC OR PNEUMATIC CYLINDER, WITH FLANGE FITTING AND INTERCHANGEABLE FIXED CENTER POINT

端面驱动顶尖 Φ100/300

FACE DRIVERS Ø 100/300

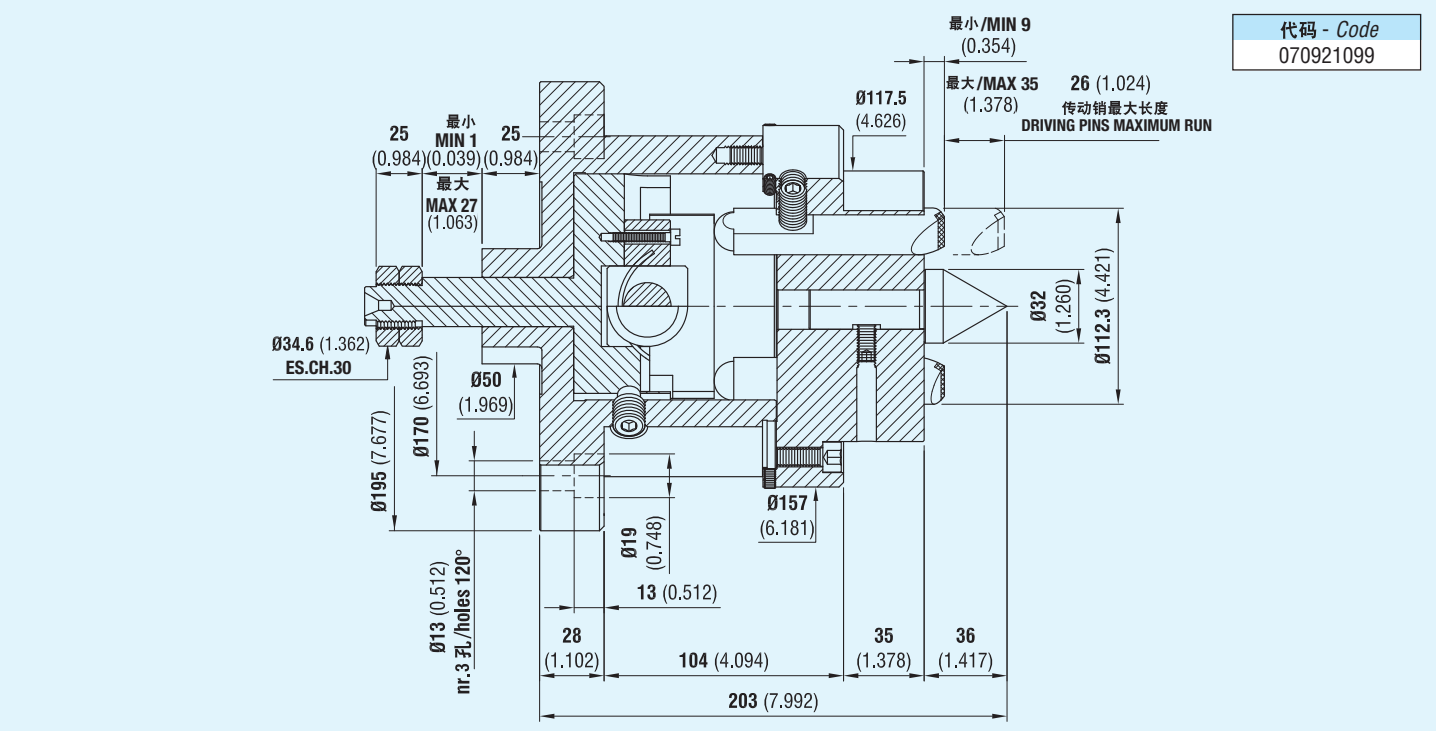

端面驱动顶尖 Φ180/400

FACE DRIVERS Ø 180/400

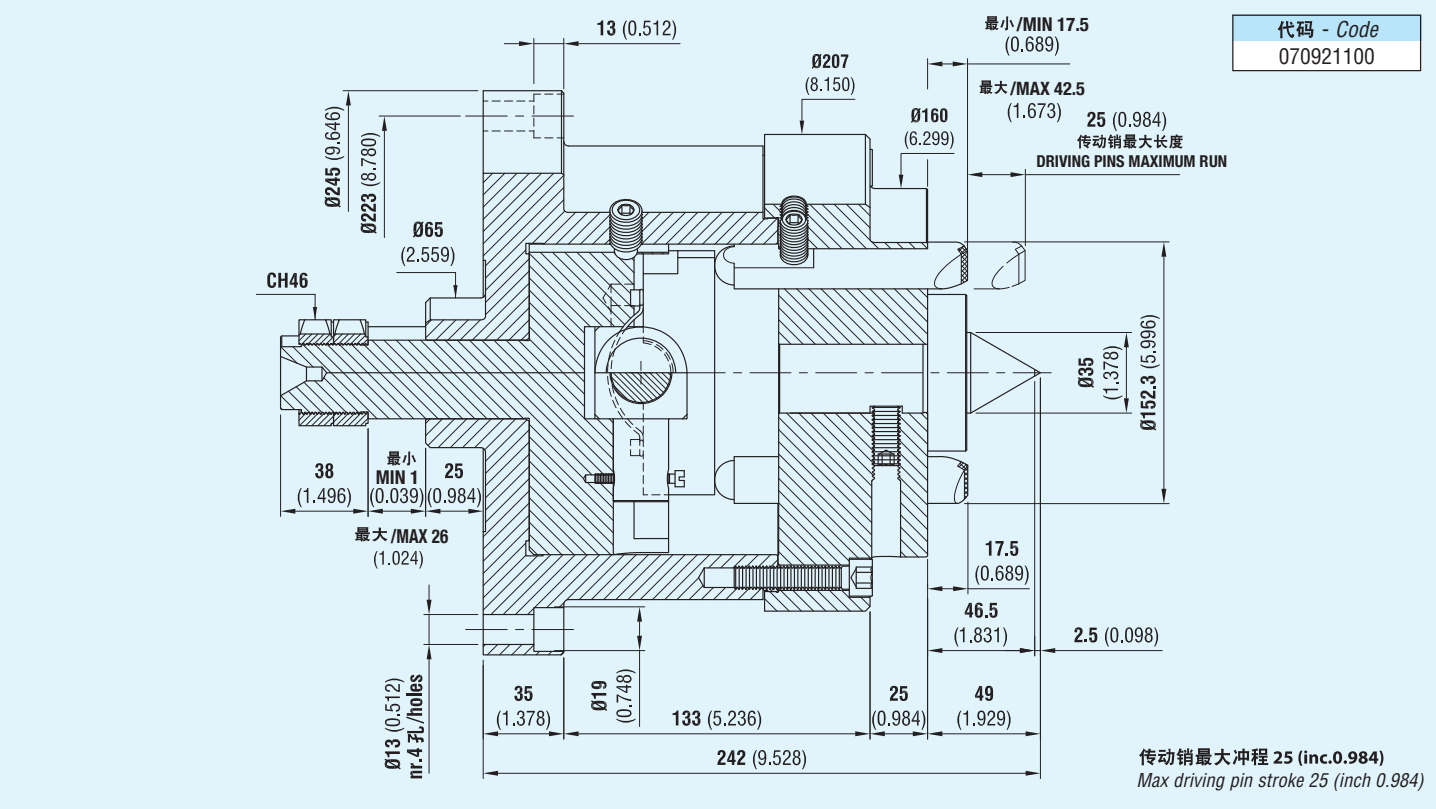

适于端面驱动顶尖 Φ100/300

For face driver ø 100/300

传动轴（Φ100~Φ300）硬质合金传动销

Driving pins with added hard metal for driving shafts from ø 100 to ø 300

代码 - *Code*
080920400

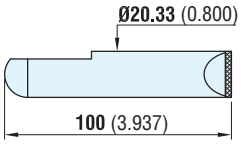

与顶尖（Φ3~Φ28）配套的固定顶尖端

Fixed center point for centers from ø 3 to ø 28

代码 - *Code*
072102765

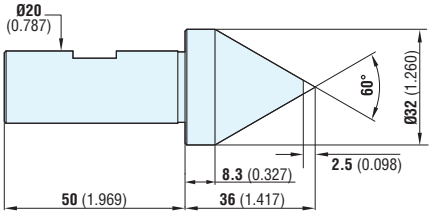

传动轴（Φ100~Φ300，降低后可使传动轮移动至端面驱动顶尖侧）硬质合金传动销（边缘减少）

Reduced edge driving pins with added hard metal for driving shafts from ø 100 to ø 300 lowered to permit the wheel to get out on face driver side

代码 - *Code*	*Ø A*	*B*
091920402	84 (3.307)	6.3 (0.248)
091920403	89 (3.504)	8.8 (0.346)
091920404	94 (3.701)	11.3 (0.445)
091920405	99 (3.898)	13.8 (0.543)

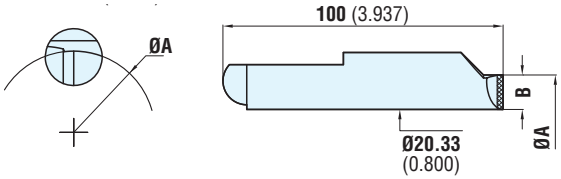

含插槽的与顶尖或孔（Φ28~Φ100）配套的固定顶尖端

Fixed center point with slots for centers or holes from ø 28 to ø 100

代码 *Code*	尺寸 *Dimensions*		适于顶尖或孔 *For centers or holes*	
	Ø A	*Ø B*	（最小）/ *from Ø*	（最大）/ *to Ø*
171714019	25 (0.984)	48 (1.890)	28 (1.102)	47 (1.850)
171714020	42 (1.654)	65 (2.559)	45 (1.772)	64 (2.520)
171714021	60 (2.362)	83 (3.268)	63 (2.480)	82 (3.228)
171714022	78 (3.071)	101 (3.976)	81 (3.189)	100 (3.937)

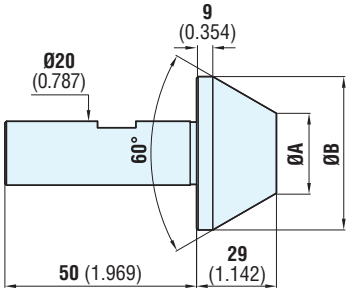

端面驱动顶尖 Φ180/400

For face driver ø 180/400

传动轴（Φ180~Φ400）硬质合金传动销含插槽和边缘减少的传动销的顶尖端可根据需要提供

Driving pins with added hard metal for driving shafts from ø 180 to ø 400. Center points with slots and reduced edge driving pins available on request

代码 - *Code*
080920401

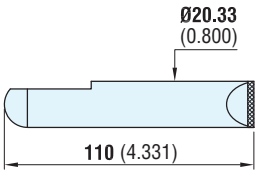

端面驱动顶尖 180/400 固定顶尖端

Fixed center point for face driver 180/400

代码 - *Code*
072102763

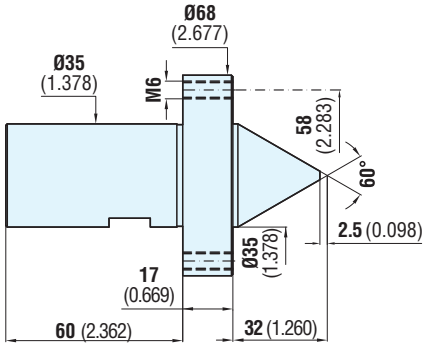

检查机床轴向推力的测力传感器袋

BAG - LOAD CELL FOR CHECKING AXIAL THRUST ON MACHINE TOOLS

传感器袋的组成部分 ***Contents of the bag***

代码 *Code*
105090303

Q.&/*Q.ty*	品名 /*Description*	位置/*Position*
1	数字电子测力计 /*Digital electronic Dynamometer*	1
1	数字测力计的测力传感器 /*Load cell for digital dynamometer*	2
2	叉形扳手 27mm /*Fork wrenches mm 27*	3
1	转矩扳手 /*Torque wrench*	4
1	二进制系列套筒 1.2.4.8.16.32.64.128. 256 /*Bynary range of sleeves* 1.2.4.8.16.32.64.128. 256	5/1.2.....256
1	顶尖帽端面驱动顶尖侧 Φ100 /*Centered cap face driver side Ø 100*	6
1	顶尖帽端面驱动顶尖侧 Φ40 /*Centered cap face driver side Ø 40*	7
1	顶尖帽活顶尖 Φ 30 /*Centered cap live center Ø 30*	8
	含手册 /*And with instruction book*	

组成部分布置图 ***DISPOSITION OF THE CONTENTS***

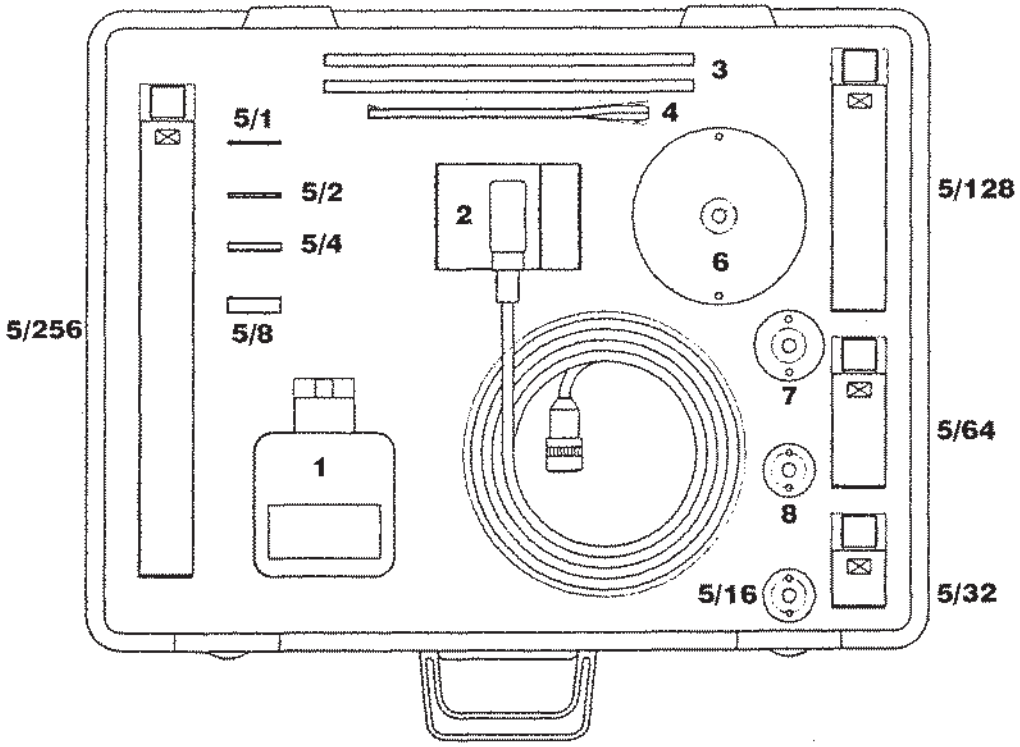

磨床推杆及液压缸

PUSHER AND HYDRAULIC CYLINDER FOR GRINDING MACHINES

		与缸体（代码 070920045）相对应的压力（面积=32.3cm²） *Pressure that can be used with our cylinder code 070920045 (area = cm² 32.3)*	
p.s.i.	Bar	Kg.	Lbs
58	4	130	290
72	5	165	360
87	6	195	435
101	7	230	500
116	8	260	580
130	9	300	650
145	10	330	725

推杆	缸体	传感器支架
PUSHER	***CYLINDER***	***BRACKET SUPPORT MICRO***
代码 - *CODE* 070920050	代码- *CODE* 070920045	代码- *CODE* 070920051

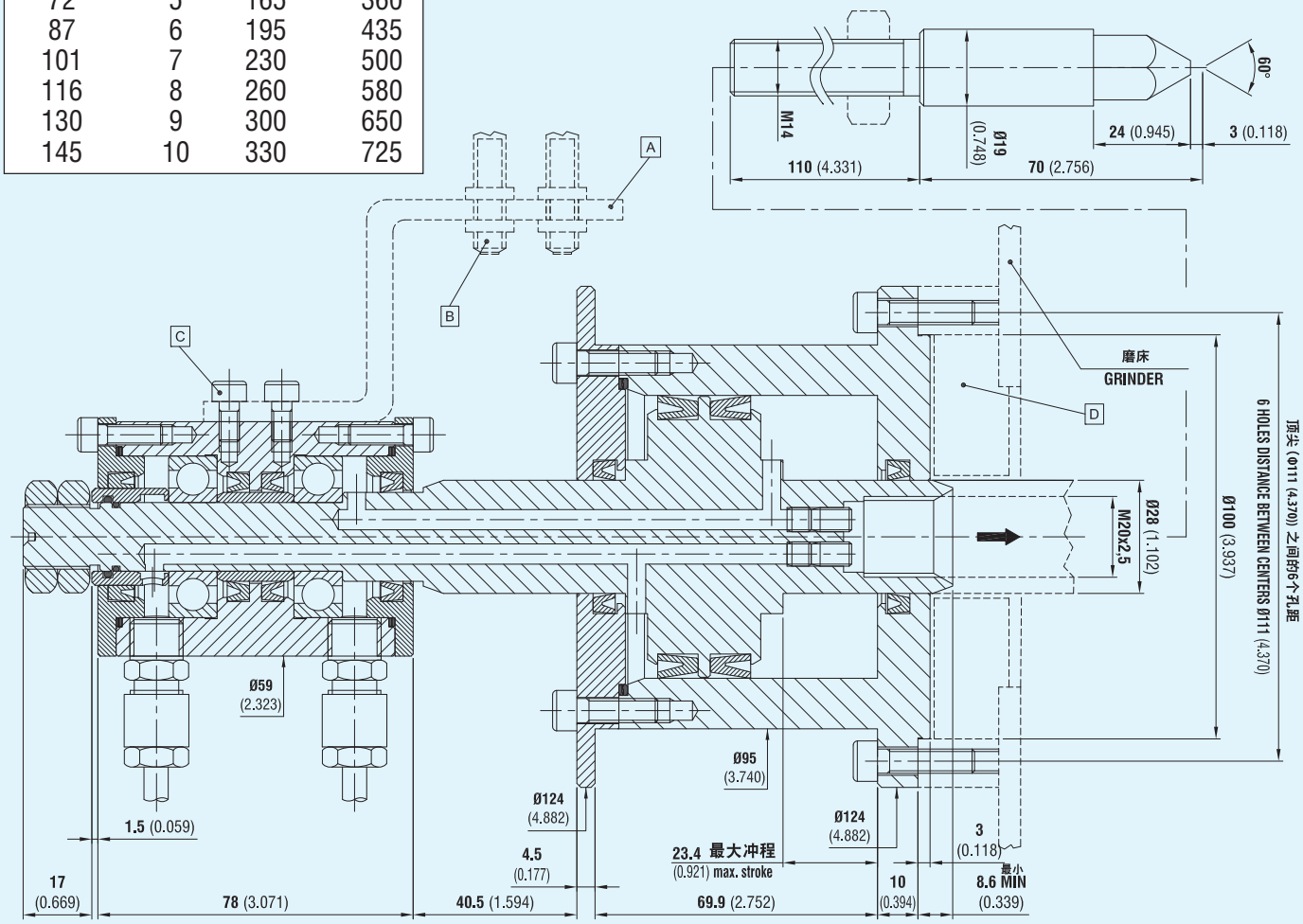

活塞横截面积：32.3cm² — ***PISTON CROSS SECTION AREA: 32,3 cm2***
最大允许压力：40Bar — ***MAX PRESSURE ALLOWED: 40 Bar***
最大速度：1500r.p.m. — ***MAX SPEED: 1500 r.p.m.***

未含零件 / *PARTS NOT INCLUDED*

A)	位置接近开关	***Position proximity switches***
B)	接近开关	***Proximity switches***
C)	螺钉	***Screws***
D)	适配器（经调节适合磨床）	***Adaptor(to be adjusted to the grinding machines)***

TECNOLOGIE FRB S.r.l.

VIA CÀ BELFIORE, 16
40037 BORGONUOVO DI SASSO MARCONI (BOLOGNA) ITALY
Tel. 051.84.67.60 (6 linee con ricerca aut.) - Telefax 051.84.53.06
SITO INTERNET: www.tecnologiefrb.com
INDIRIZZO e-mail: info@tecnologiefrb.com

我们的活顶尖和端面驱动顶尖可试用 60 天。这一试用期可让用户在决定购买产品前评估我们的产品。
要获取进一步详细信息，请电话咨询技术室。Tecnologie FRB 目录中的所有产品我们均备有现货。发货时间取决于我们的运输计划表。

Our live centers and face drivers can be tried out free for 60 days.
This trial period enables the user to evaluate our products before deciding to buy them.
For further and more detailed information, telephone our technical office.
All the products in the Tecnologie FRB catalogue are held in stock.
Delivery times therefore depend only on trasportation schedules.

TECNOLOGIE FRB S.r.l. 在法律上对本目录中所含数据、设计及图纸不承担责任。该目录随时根据设备进行修改。TECNOLOGIE FRB S.r.l. 保留未事先通知情况下随时进行这些修改的权利。未经 TECNOLOGIE FRB S.r.l. 事先书面同意，不得出版或再版或翻译整体或部分本目录中的说明和图例。

TECNOLOGIE FRB S.r.l. shall not be legally bound by the data, design and drawings in contained in this catalogue, which is subject to modifications made on the equipment. TECNOLOGIE FRB S.r.l. reserves the right to make any such modifications without prior warning. The descriptions and illustrations in this catalogue shall not be used in other publications or be reprinted or translated either in their entirety or in part without the prior written consent of TECNOLOGIE FRB S.r.l.

® TECNOLOGIE FRB S.r.l. 版权所有
于意大利印刷

TECNOLOGIE FRB S.r.l.

CERTIFICAZIONE
SISTEMI DI
GESTIONE
ISO 9001:2008
nr. 50 100 10556

TECNOLOGIE FRB S.r.l.
ATTREZZATURE PER MACCHINE UTENSILI
Via Cà Belfiore, 16
40037 Borgonuovo di Sasso Marconi (Bologna) Italy
Tel. +39.051.84.67.60 (6 linee r.a.)
Telefax +39.051.84.53.06
www.tecnologiefrb.com - E.mail: info@tecnologiefrb.com

RIVENDITORE AUTORIZZATO