DORMER

# 硬质合金螺纹铣刀

# 介绍

- 多马公司推出的高性能整体硬质合金螺纹铣刀，具有高经济性，高寿命和多用途等性能
- 结合Alcrona预处理的高级涂层可提供韧性和耐磨性的完美结合，这种技术在加工大部分工件材料时即可保证安全性，同时又能提供可靠性；

# 使用螺纹铣刀的需求

如果想选用螺纹铣刀加工，选择可以提供圆弧插补或螺旋插补的数控设备是很有必要的。大部分现代CNC数控机床都配备了可用于螺纹铣刀加工时的循环程序。为了获得信息可参考产品手册或联系机床供应商。也可以单独写一段螺纹铣削子程序。大家可使用多马产品选择软件或联系多马技术支持来寻求进一步帮助。

# 特点 & 优势

- 相比传统螺纹加工，螺纹铣削的优点。
- 螺纹铣削可提高稳定性
- 螺纹铣削可产生更小的切屑，程序更灵活
- 通过精准的计算，螺纹公差可调
- 可加工至孔底的全螺纹
- 更长的刀具寿命
- 适用于大部分工件材料
- 只要螺距一样，同样刀具可用于多种直径加工
- 同样刀具即可用于左手也可用于右手内螺纹加工，G(BSP)能用于内外螺纹加工
- 适用于干式加工
- 米制锪孔刀具(J200/ J205)可用于倒角
- 相比传统丝锥，可用于倒角的圆锥螺纹铣刀可提供更好的质量和精度

# 螺纹铣削的其他方面

- 虽然螺纹铣削在加工大孔时属于相对较慢的工艺，然而，加工的质量和精度可补偿速度上的不足
- 螺纹深度通常限制在2倍径

# 选择刀具

所有螺纹铣刀都有产品代码，包含类型，直径(d1) 和螺距(P)。这个产品代码是一串数字，当订购刀具时会用到。如果需要核对螺纹刀具的尺寸，可参考样本或多马产品选择软件

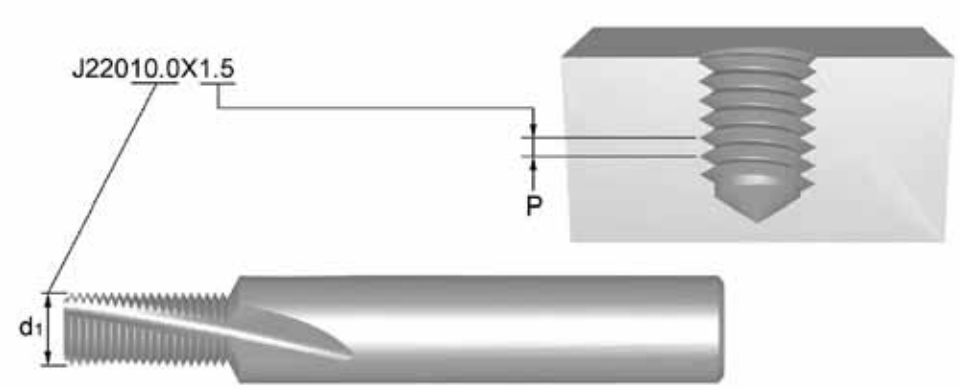


所有螺纹铣刀都有产品代码，包含类型，直径(d1)

多马产品选择软件可提供分部指导，这种方式可帮助客户选择正确的刀具，进而优化生成的螺纹程序。螺纹铣削程序案例可提供大部分常用系统，如：DIN 66025(ISO), Fanuc, Heidenhain and Siemens,所提供程序不仅针对内外螺纹，也针对左右手螺纹

# 使用Rprg来编程

为了方便调整螺纹公差，需要一直以圆角校正来编程。Rprg值被打标在刀体上，通常将此值输入在刀具编制栏中。Rprg是新刀具的初始值

Rprg建立在螺纹铣刀的零点坐标系上。这意味着当你使用Rprg工作时，螺纹不会太大，但会很紧，通常是非常紧。此时，你必须输入一个量以此找到公称螺纹直径的正确公差。检查间隙，如果使用刀具产品选择软件生成CNC程序，你会得到关于如何调整Rprg值的推荐，记得更小的Rprg值会提供更大的公称螺纹直径。

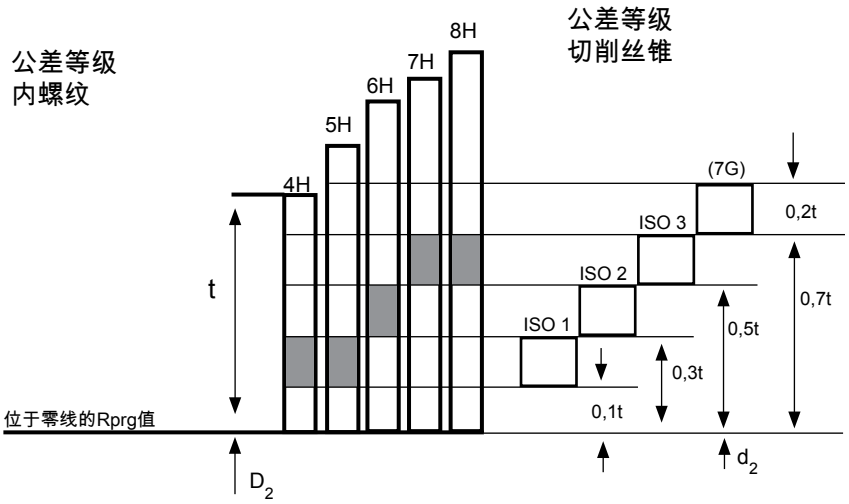


$t = T_{D2}$ = 公差等级DIN 13 part 15
$D_2 = d_2$ = 基本螺距直径

# 推荐

- 在刀具选择软件中运行程序会得到螺纹铣削刀具最适合的工况推荐，并带有切削数据和最优的CNC程序。CNC程序可按照大部分数控系统来生成程序，这些数控i系统包括：DIN66025(ISO), Heidenhain, Fanuc 和 Siemens.

- 总是使用正确的切削速度和进给(参考AMG图标的第四页).

- 使用推荐的螺纹底孔钻削尺寸，如传统丝锥

- 为了方便调整螺纹公差，需要一直以圆角校正来编程。Rprg初始值被打标在刀体上，如果通过刀具选择软件来选择公差值，你会得到关于如何调整Rprg值的推荐

- 为了方便调整螺纹公差，需要一直以圆角校正来编程。Rprg初始值被打标在刀体上，如果通过刀具选择软件来选择公差值，你会得到关于如何调整Rprg值的推荐

- 当干式切削时，压缩空气可帮助去除铁屑

- 当加工更难加工材料时，推荐通过2或3刀来完成螺纹铣削工序。刀具选择工具会提供生成CNC程序的选择，通过2或3刀来完成。

DORMER

| | | | | | | | | | | |
|---|---|---|---|---|---|---|---|---|---|---|
| | M | M | M | M | MF | MF | UNC | UNF | G | NPT |
| | DORMER | DORMER | DORMER | DORMER | DORMER | DORMER | DORMER | DORMER | DORMER | DORMER |
| | 2XD | 2XD | 2XD | 2XD | 1.5XD | 1.5XD | 2XD | 2XD | 1.5XD | |
| | HM | HM | HM | HM | HM | HM | HM | HM | HM | HM |
| | λ10° | λ10° | λ27° | λ27° | λ10° | λ10° | λ10° | λ10° | λ10° | λ10° |
| | Alcrona Pro | Alcrona Pro | Alcrona Pro | Alcrona Pro | Alcrona Pro | Alcrona Pro | Alcrona Pro | Alcrona Pro | Alcrona Pro | Alcrona Pro |
| | | | | | | | | | | |
| | **J200** | **J205** | **J210** | **J215** | **J220** | **J225** | **J235** | **J245** | **J280** | **J260** |
| | M4 - M16 | M8 - M16 | M6 - M16 | M6 - M16 | M6 - M24 | M10 - M18 | 1/4 - 3/4 | 1/4 - 3/4 | 1/8 - 3" | 1/8 - 2" |
| | NEW | NEW | NEW | NEW | NEW | NEW | NEW | NEW | NEW | NEW |
| 1.1 | ■170B | ■170B | ■175B | ■175B | ■170B | ■170B | ■170B | ■170B | ■170B | ■170B |
| 1.2 | ■170B | ■170B | ■175B | ■175B | ■170B | ■170B | ■170B | ■170B | ■170B | ■170B |
| 1.3 | ■140B | ■140B | ■145B | ■145B | ■140B | ■140B | ■140B | ■140B | ■140B | ■140B |
| 1.4 | ■130B | ■130B | ■135B | ■135B | ■130B | ■130B | ■130B | ■130B | ■130B | ■130B |
| 1.5 | ■100B | ■100B | ■105B | ■105B | ■100B | ■100B | ■100B | ■100B | ■100B | ■100B |
| 1.6 | ■80B | ■80B | ■85B | ■85B | ■80B | ■80B | ■80B | ■80B | ■80B | ■80B |
| 1.7 | ●50A | ●50A | ●50A | ●50A | ●50A | ●50A | ●50A | ●50A | ●50A | ●50A |
| 1.8 | ●30A | ●30A | ●30A | ●30A | ●30A | ●30A | ●30A | ●30A | ●30A | ●30A |
| 2.1 | ●50A | ■50A | ●50A | ●50A | ●50A | ■50A | ■50A | ■50A | ●50A | ●50A |
| 2.2 | ●40A | ■40A | ●40A | ●40A | ●40A | ■40A | ■40A | ■40A | ●40A | ●40A |
| 2.3 | ●30A | ■30A | ●30A | ●30A | ●30A | ■30A | ■30A | ■30A | ●30A | ●30A |
| 2.4 | ●25A | ■25A | ●25A | ●25A | ●25A | ■25A | ■25A | ■25A | ●25A | ●25A |
| 3.1 | ■150B | ■150B | ■155B | ■155B | ■150B | ■150B | ■150B | ■150B | ■150B | ■150B |
| 3.2 | ■130B | ■130B | ■135B | ■135B | ■130B | ■130B | ■130B | ■130B | ■130B | ■130B |
| 3.3 | ■150B | ■150B | ■155B | ■155B | ■150B | ■150B | ■150B | ■150B | ■150B | ■150B |
| 3.4 | ■120B | ■120B | ■125B | ■125B | ■120B | ■120B | ■120B | ■120B | ■120B | ■120B |
| 4.1 | ■170B | ■170B | ■175B | ■175B | ■170B | ■170B | ■170B | ■170B | ■170B | ■170B |
| 4.2 | ■80B | ■80B | ■80B | ■80B | ■80B | ■80B | ■80B | ■80B | ■80B | ■80B |
| 4.3 | ■50B | ■50B | ■50B | ■50B | ■50B | ■50B | ■50B | ■50B | ■50B | ■50B |
| 5.1 | ●250B | ■250B | ●250B | ●250B | ●250B | ■250B | ■250B | ■250B | ●250B | ●250B |
| 5.2 | ●40A | ■40A | ●40A | ●40A | ●40A | ■40A | ■40A | ■40A | ●40A | ●40A |
| 5.3 | ●25A | ●25A | ●25A | ●25A | ●25A | ■25A | ●25A | ●25A | ●25A | ●25A |
| 6.1 | ■400B | ■400B | ■405B | ■405B | ■400B | ■400B | ■400B | ■400B | ■400B | ■400B |
| 6.2 | ■400B | ■400B | ■405B | ■405B | ■400B | ■400B | ■400B | ■400B | ■400B | ■400B |
| 6.3 | ■400B | ■400B | ■405B | ■405B | ■400B | ■400B | ■400B | ■400B | ■400B | ■400B |
| 6.4 | ■60A | ■60A | ■60A | ■60A | ■60A | ■60A | ■60A | ■60A | ■60A | ■60A |
| 7.1 | ■800C | ■800C | ■805C | ■805C | ■800C | ■800C | ■800C | ■800C | ■800C | ■800C |
| 7.2 | ■800C | ■800C | ■805C | ■805C | ■800C | ■800C | ■800C | ■800C | ■800C | ■800C |
| 7.3 | ■700C | ■700C | ■705C | ■705C | ■700C | ■700C | ■700C | ■700C | ■700C | ■700C |
| 7.4 | ■340B | ■340B | ■345B | ■345B | ■340B | ■340B | ■340B | ■340B | ■340B | ■340B |
| 8.1 | ■340C | ■340C | ■345C | ■345C | ■340C | ■340C | ■340C | ■340C | ■340C | ■340C |
| 8.2 | ■210C | ■210C | ■210C | ■210C | ■210C | ■210C | ■210C | ■210C | ■210C | ■210C |
| 8.3 | ■180C | ■180C | ■180C | ■180C | ■180C | ■180C | ■180C | ■180C | ■180C | ■180C |
| 9.1 | | | | | | | | | | |
| 10.1 | ●200C | ●200C | ●200C | ●200C | ●200C | ●200C | ●200C | ●200C | ●200C | ●200C |

DORMER

## M

| | A | | B | | C | |
|---|---|---|---|---|---|---|
| Ø | ap= 1 x $d_1$ | ap= 2 x $d_1$ | ap= 1 x $d_1$ | ap= 2 x $d_1$ | ap= 1 x $d_1$ | ap= 2 x $d_1$ |
| 3.2 | 0.010 | 0.005 | 0.011 | 0.006 | 0.017 | 0.012 |
| 4.1 | 0.009 | 0.007 | 0.012 | 0.008 | 0.014 | 0.011 |
| 4.8 | 0.012 | 0.009 | 0.015 | 0.010 | 0.017 | 0.014 |
| 6.5 | 0.017 | 0.014 | 0.027 | 0.017 | 0.030 | 0.025 |
| 8.2 | 0.021 | 0.018 | 0.034 | 0.029 | 0.040 | 0.033 |
| 9.9 | 0.024 | 0.020 | 0.039 | 0.024 | 0.048 | 0.032 |
| 11.6 | 0.031 | 0.025 | 0.050 | 0.031 | 0.059 | 0.035 |
| 13.6 | 0.039 | 0.032 | 0.062 | 0.051 | 0.071 | 0.048 |

## MF

| | | A | | B | | C | |
|---|---|---|---|---|---|---|---|
| $d_1$ | P | ap= 3/4 x $d_1$ | ap= 1,5 x $d_1$ | ap= 3/4 x $d_1$ | ap= 1,5 x $d_1$ | ap= 3/4 x $d_1$ | ap= 1,5 x $d_1$ |
| 4.8 | 0.50 | 0.017 | 0.014 | 0.022 | 0.018 | 0.025 | 0.021 |
| 6.0 | 0.75 | 0.023 | 0.018 | 0.033 | 0.027 | 0.037 | 0.030 |
| 6.0 | 1.00 | 0.020 | 0.016 | 0.029 | 0.023 | 0.032 | 0.026 |
| 8.0 | 1.00 | 0.025 | 0.020 | 0.041 | 0.033 | 0.045 | 0.037 |
| 10.0 | 1.00 | 0.034 | 0.028 | 0.055 | 0.045 | 0.069 | 0.056 |
| 10.0 | 1.50 | 0.028 | 0.023 | 0.045 | 0.037 | 0.056 | 0.046 |
| 12.0 | 1.00 | 0.048 | 0.039 | 0.077 | 0.065 | 0.077 | 0.075 |
| 12.0 | 1.50 | 0.040 | 0.032 | 0.065 | 0.053 | 0.076 | 0.062 |
| 14.0 | 1.00 | 0.060 | 0.049 | 0.084 | 0.079 | 0.084 | 0.084 |
| 14.0 | 1.50 | 0.049 | 0.040 | 0.079 | 0.064 | 0.084 | 0.074 |
| 16.0 | 2.00 | 0.050 | 0.041 | 0.082 | 0.066 | 0.089 | 0.077 |
| 20.0 | 2.00 | 0.067 | 0.055 | 0.100 | 0.093 | 0.100 | 0.100 |

## G

| | A | | B | | C | |
|---|---|---|---|---|---|---|
| $d_1$ | ap= 3/4 x $d_1$ | ap= 1.5 x $d_1$ | ap= 3/4 x $d_1$ | ap= 1.5 x $d_1$ | ap= 3/4 x $d_1$ | ap= 1.5 x $d_1$ |
| 6.0 | 0.022 | 0.017 | 0.031 | 0.025 | 0.034 | 0.028 |
| 10.0 | 0.030 | 0.025 | 0.050 | 0.040 | 0.062 | 0.050 |
| 14.0 | 0.045 | 0.036 | 0.070 | 0.055 | 0.075 | 0.060 |
| 16.0 | 0.050 | 0.041 | 0.081 | 0.066 | 0.089 | 0.077 |
| 20.0 | 0.067 | 0.055 | 0.098 | 0.090 | 0.100 | 0.095 |
| 25.0 | 0.070 | 0.058 | 0.100 | 0.095 | 0.120 | 0.100 |

## UNC

| | | A | | B | | C | |
|---|---|---|---|---|---|---|---|
| $d_1$ | TPI | ap= 1 x $d_1$ | ap= 2 x $d_1$ | ap= 1 x $d_1$ | ap= 2 x $d_1$ | ap= 1 x $d_1$ | ap= 2 x $d_1$ |
| 4.8 | 20 | 0.003 | 0.003 | 0.012 | 0.006 | 0.029 | 0.014 |
| 5.5 | 18 | 0.004 | 0.003 | 0.017 | 0.009 | 0.041 | 0.023 |
| 7.5 | 16 | 0.008 | 0.005 | 0.029 | 0.016 | 0.056 | 0.043 |
| 8.0 | 14 | 0.008 | 0.006 | 0.031 | 0.018 | 0.060 | 0.049 |
| 10.0 | 13 | 0.009 | 0.007 | 0.040 | 0.032 | 0.071 | 0.071 |
| 10.0 | 12 | 0.008 | 0.006 | 0.038 | 0.029 | 0.071 | 0.069 |
| 12.0 | 11 | 0.009 | 0.007 | 0.036 | 0.026 | 0.077 | 0.077 |
| 14.0 | 10 | 0.010 | 0.008 | 0.060 | 0.043 | 0.084 | 0.084 |

## UNF

| | A | | B | | C | |
|---|---|---|---|---|---|---|
| $d_1$ | ap= 1 x $d_1$ | ap= 2 x $d_1$ | ap= 1 x $d_1$ | ap= 2 x $d_1$ | ap= 1 x $d_1$ | ap= 2 x $d_1$ |
| 4.8 | 0.004 | 0.003 | 0.016 | 0.008 | 0.034 | 0.021 |
| 6.0 | 0.006 | 0.004 | 0.028 | 0.016 | 0.055 | 0.045 |
| 8.0 | 0.013 | 0.007 | 0.037 | 0.025 | 0.063 | 0.058 |
| 10.0 | 0.022 | 0.011 | 0.046 | 0.038 | 0.071 | 0.071 |
| 14.0 | 0.036 | 0.018 | 0.075 | 0.061 | 0.084 | 0.084 |

## NPT

| $d_1$ | Ap= | A | B | C |
|---|---|---|---|---|
| 7.9 | Standard | 0.026 | 0.044 | 0.069 |
| 9.9 | Standard | 0.029 | 0.046 | 0.070 |
| 15.9 | Standard | 0.053 | 0.087 | 0.089 |
| 19.9 | Standard | 0.064 | 0.100 | 0.100 |

**ap =**

**$d_1$ =**

**J200** M DORMER 2XD HM λ10° Alcrona Pro

**J205** M DORMER 2XD HM λ10° Alcrona Pro

## J200

- M螺纹铣削螺旋角度10° — 内螺纹
- Fresa Interpoladora de Rosca Métrica com Canal Helicoidal 10° — Rosca Interna
- Fresa para rosca M con ángulo de hélice de 10° — Rosca interior
- M Thread Mill Spiral Flute 10° — Internal Thread

## J205

- M螺纹铣削螺旋角度10° 油进给 — 内螺纹
- Fresa Interpoladora de Rosca Métrica com Canal Helicoidal 10° com refrigeração interna — Rosca Interna
- Fresa para rosca M con ángulo de hélice de 10° - refrigeración interna — Rosca interior
- M Thread Mill Spiral Flute 10° Oil Feed — Internal Thread

| | | |
|---|---|---|
| J200 | ▪ | 1.1 1.2 1.3 1.4 1.5 1.6 3.1 3.2 3.3 3.4 4.1 4.2 4.3 6.1 6.2 6.3 6.4 7.1 7.2 7.3 7.4 8.1 8.2 8.3 |
| | • | 1.7 1.8 2.1 2.2 2.3 2.4 5.1 5.2 5.3 10.1 |
| J205 | ▪ | 1.1 1.2 1.3 1.4 1.5 1.6 2.1 2.2 2.3 2.4 3.1 3.2 3.3 3.4 4.1 4.2 4.3 5.1 5.2 6.1 6.2 6.3 6.4 7.1 7.2 7.3 7.4 8.1 8.2 8.3 |
| | • | 1.7 1.8 5.3 10.1 |

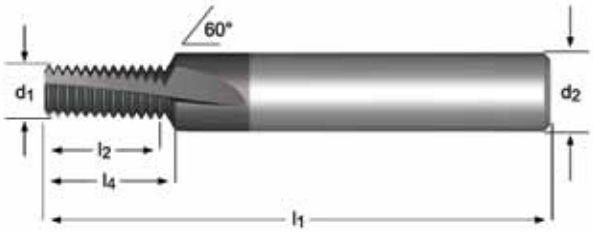


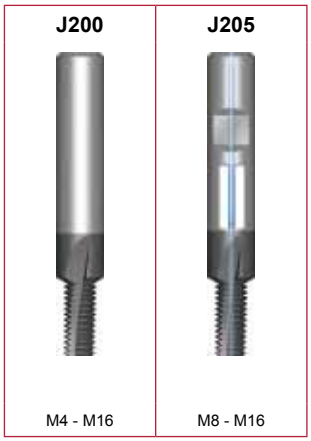


| ≥ | P mm | $d_1$ Ø mm | $l_2$ mm | $l_1$ mm | $d_2$ Ø mm | z | $l_4$ mm | J200 | J205 |
|---|---|---|---|---|---|---|---|---|---|
| M4 | 0.70 | 3.20 | 8.4 | 57 | 6 | 3 | 9.5 | J2003.2X.7 | |
| M5 | 0.80 | 4.10 | 11.2 | 57 | 6 | 3 | 12.1 | J2004.1X.8 | |
| M6 | 1.00 | 4.80 | 13.0 | 63 | 8 | 3 | 14.4 | J2004.8X1.0 | |
| M8 | 1.25 | 6.50 | 17.5 | 72 | 10 | 3 | 19.1 | J2006.5X1.25 | J2056.5X1.25 |
| M10 | 1.50 | 8.20 | 21.0 | 83 | 12 | 3 | 22.8 | J2008.2X1.5 | J2058.2X1.50 |
| M12 | 1.75 | 9.90 | 26.25 | 83 | 14 | 4 | 28.2 | J2009.9X1.75 | J2059.9X1.75 |
| M14 | 2.00 | 11.60 | 30.0 | 92 | 16 | 4 | 32.2 | J20011.6X2.0 | J20511.6X2.0 |
| M16 | 2.00 | 13.60 | 34.0 | 92 | 18 | 4 | 36.2 | J20013.6X2.0 | J20513.6X2.0 |

DORMER

**J210** M | DORMER | 2XD | HM | λ27° | Alcrona Pro

**J215** M | DORMER | 2XD | HM | λ27° | Alcrona Pro

## J210

- M螺纹铣削螺 螺纹铣削螺旋角度 27° — 内螺纹
- Fresa Interpoladora de Rosca Métrica com Canal Helicoidal 27° — Rosca Interna
- Fresa para rosca M con ángulo de hélice de 27° — Rosca interior
- M Thread Mill Spiral Flute 27° — Internal Thread

## J215

- M螺纹铣削螺旋角度27° 油进给 — 内螺纹
- Fresa Interpoladora de Rosca Métrica com Canal Helicoidal 27° com refrigeração interna — Rosca Interna
- Fresa para rosca M con ángulo de hélice de 27° - refrigeración interna — Rosca interior
- M Thread Mill Spiral Flute 27° Oil Feed — Internal Thread

| J210, J215 | | | | | | | | | | | | | | | | | | | |
|---|---|---|---|---|---|---|---|---|---|---|---|---|---|---|---|---|---|---|---|
| ■ | 1.1 | 1.2 | 1.3 | 1.4 | 1.5 | 1.6 | 3.1 | 3.2 | 3.3 | 3.4 | 4.1 | 4.2 | 4.3 | 6.1 | 6.2 | 6.3 | 6.4 | 7.1 | |
| | 7.2 | 7.3 | 7.4 | 8.1 | 8.2 | 8.3 | | | | | | | | | | | | | |
| ● | 1.7 | 1.8 | 2.1 | 2.2 | 2.3 | 2.4 | 5.1 | 5.2 | 5.3 | 10.1 | | | | | | | | | |

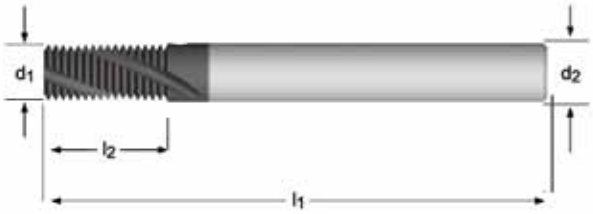


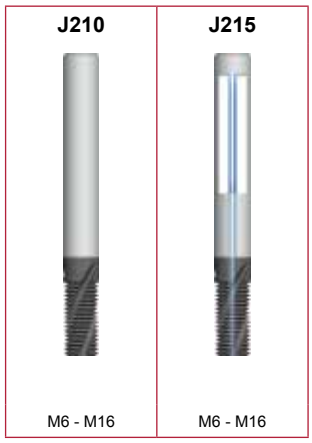


| ≥ | P mm | $d_1$ Ø mm | $l_2$ mm | $l_1$ mm | $d_2$ Ø mm | z | J210 | J215 |
|---|---|---|---|---|---|---|---|---|
| M6 | 1.00 | 4.50 | 13.0 | 57 | 6 | 3 | J2104.5X1.0 | J2154.5X1.0 |
| M8 | 1.25 | 6.00 | 17.5 | 65 | 6 | 3 | J2106.0X1.25 | J2156.0X1.25 |
| M10 | 1.50 | 7.50 | 21.0 | 72 | 8 | 3 | J2107.5X1.5 | J2157.5X1.5 |
| M12 | 1.75 | 9.50 | 26.25 | 80 | 10 | 3 | J2109.5X1.75 | J2159.5X1.75 |
| M14 | 2.00 | 10.00 | 30.0 | 83 | 10 | 4 | J21010.0X2.0 | J21510.0X2.0 |
| M16 | 2.00 | 12.00 | 34.0 | 92 | 12 | 4 | J21012.0X2.0 | J21512.0X2.0 |

**J220** MF DORMER 1.5XD HM λ10° Alcrona Pro

**J225** MF DORMER 1.5XD HM λ10° Alcrona Pro

## J220

- MF螺纹铣削螺旋角度10° — 内螺纹
- Fresa Interpoladora de Rosca MF com Canal Helicoidal 10° — Rosca Interna
- Fresa para rosca MF con ángulo de hélice de 10° — Rosca interior
- MF Thread Mill Spiral Flute 10° — Internal Thread

## J225

- MF螺纹铣削螺旋角度10° 油进给 — 内螺纹
- Fresa Interpoladora de Rosca MF com Canal Helicoidal 10° com refrigeração interna — Rosca Interna
- Fresa para rosca MF con ángulo de hélice de 10° - refrigeración interna — Rosca interior
- MF Thread Mill Spiral Flute 10° Oil Feed — Internal Thread

| | | |
|---|---|---|
| J220 | ▪ | 1.1 1.2 1.3 1.4 1.5 1.6 3.1 3.2 3.3 3.4 4.1 4.2 4.3 6.1 6.2 6.3 6.4 7.1 7.2 7.3 7.4 8.1 8.2 8.3 |
| | • | 1.7 1.8 2.1 2.2 2.3 2.4 5.1 5.2 5.3 10.1 |
| J225 | ▪ | 1.1 1.2 1.3 1.4 1.5 1.6 2.1 2.2 2.3 2.4 3.1 3.2 3.3 3.4 4.1 4.2 4.3 5.1 5.2 5.3 6.1 6.2 6.3 6.4 7.1 7.2 7.3 7.4 8.1 8.2 8.3 |
| | • | 1.7 1.8 10.1 |

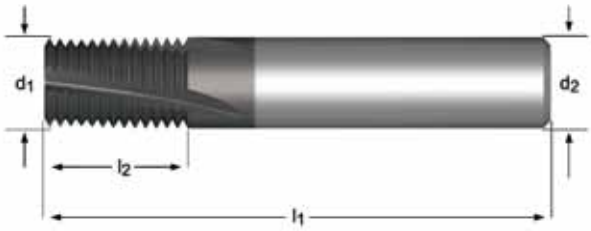


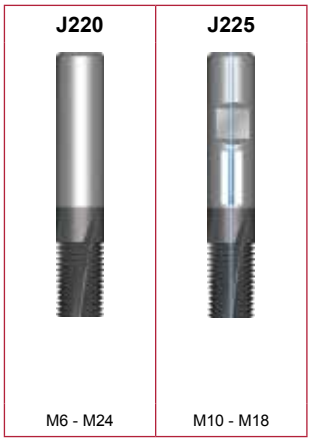


| ≥ | P mm | $d_1$ Ø mm | $l_2$ mm | $l_1$ mm | $d_2$ Ø mm | z | J220 | J225 |
|---|---|---|---|---|---|---|---|---|
| M6 | 0.50 | 4.80 | 10.0 | 57 | 6 | 3 | J2204.8X.5 | |
| M8 | 0.75 | 6.00 | 12.0 | 57 | 6 | 3 | J2206.0X.75 | |
| M8 | 1.00 | 6.00 | 12.0 | 57 | 6 | 3 | J2206.0X1.0 | |
| M10 | 1.00 | 8.00 | 16.0 | 63 | 8 | 4 | J2208.0X1.0 | J2258.0X1.0 |
| M12 | 1.00 | 10.00 | 20.0 | 72 | 10 | 4 | J22010.0X1.0 | J22510.0X1.0 |
| M12 | 1.50 | 10.00 | 20.0 | 72 | 10 | 4 | J22010.0X1.5 | J22510.0X1.5 |
| M14 | 1.00 | 12.00 | 22.0 | 83 | 12 | 4 | J22012.0X1.0 | J22512.0X1.0 |
| M14 | 1.50 | 12.00 | 22.0 | 83 | 12 | 4 | J22012.0X1.5 | J22512.0X1.5 |
| M16 | 1.00 | 14.00 | 26.0 | 83 | 14 | 5 | J22014.0X1.0 | J22514.0X1.0 |
| M16 | 1.50 | 14.00 | 26.0 | 83 | 14 | 5 | J22014.0X1.5 | J22514.0X1.5 |
| M18 | 1.50 | 16.00 | 30.0 | 92 | 16 | 5 | | J22516.0X1.5 |
| M20 | 2.00 | 16.00 | 30.0 | 92 | 16 | 5 | J22016.0X2.0 | |
| M20 | 2.50 | 16.00 | 42.5 | 105 | 16 | 5 | J22016.0X2.5 | |
| M24 | 2.00 | 20.00 | 35.0 | 104 | 20 | 5 | J22020.0X2.0 | |
| M24 | 3.00 | 19.00 | 50.0 | 125 | 20 | 5 | J22019.0X3.0 | |

DORMER

J235 UNC DORMER 2XD HM λ10° Alcrona Pro

# J235

- UNC螺纹铣削螺旋角度10° 油进给
- Fresa Interpoladora de Rosca UNC com Canal Helicoidal 10° com refrigeração interna
- Fresa para rosca UNC con ángulo de hélice de 10° - refrigeración interna
- UNC Thread Mill Spiral Flute 10° Oil Feed

内螺纹
Rosca Interna
Rosca interior
Internal Thread

| J235 | | | | | | | | | | | | | | | | | | | | | |
|---|---|---|---|---|---|---|---|---|---|---|---|---|---|---|---|---|---|---|---|---|---|
| ■ | 1.1 | 1.2 | 1.3 | 1.4 | 1.5 | 1.6 | 2.1 | 2.2 | 2.3 | 2.4 | 3.1 | 3.2 | 3.3 | 3.4 | 4.1 | 4.2 | 4.3 | 5.1 | 5.2 | 6.1 | |
| | 6.2 | 6.3 | 6.4 | 7.1 | 7.2 | 7.3 | 7.4 | 8.1 | 8.2 | 8.3 | | | | | | | | | | | |
| ● | 1.7 | 1.8 | 5.3 | 10.1 | | | | | | | | | | | | | | | | | |

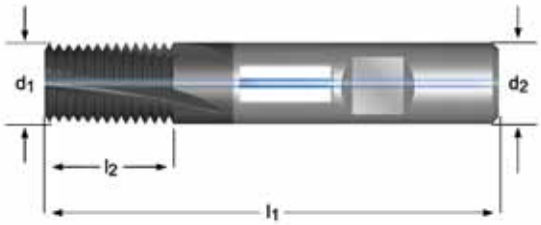


J235

1/4 - 3/4

| ⩾ | TPI | $d_1$ Ø mm | $l_2$ mm | $l_1$ mm | $d_2$ Ø mm | z | J235 |
|---|---|---|---|---|---|---|---|
| 1/4 | 20 | 4.80 | 14.0 | 57 | 6 | 3 | J2354.8-20 |
| 5/16 | 18 | 5.50 | 14.0 | 57 | 6 | 3 | J2355.5-18 |
| 3/8 | 16 | 7.50 | 19.0 | 63 | 8 | 4 | J2357.5-16 |
| 7/16 | 14 | 8.00 | 19.0 | 63 | 8 | 4 | J2358.0-14 |
| 1/2 | 13 | 10.00 | 22.0 | 72 | 10 | 4 | J23510.0-13 |
| 9/16 | 12 | 10.00 | 22.0 | 72 | 10 | 4 | J23510.0-12 |
| 5/8 | 11 | 12.00 | 26.0 | 83 | 12 | 4 | J23512.0-11 |
| 3/4 | 10 | 14.00 | 32.0 | 83 | 14 | 5 | J23514.0-10 |

J245 UNF DORMER 2XD HM λ10° Alcrona Pro

# J245

- UNF螺纹铣削螺旋角度10° 油进给
- Fresa Interpoladora de Rosca UNF com Canal Helicoidal 10° com refrigeração interna
- Fresa para rosca UNF con ángulo de hélice de 10° - refrigeración interna
- UNF Thread Mill Spiral Flute 10° Oil Feed

内螺纹
Rosca Interna
Rosca interior
Internal Thread

| J245 | | | | | | | | | | | | | | | | | | | | | |
|---|---|---|---|---|---|---|---|---|---|---|---|---|---|---|---|---|---|---|---|---|---|
| ■ | 1.1 | 1.2 | 1.3 | 1.4 | 1.5 | 1.6 | 2.1 | 2.2 | 2.3 | 2.4 | 3.1 | 3.2 | 3.3 | 3.4 | 4.1 | 4.2 | 4.3 | 5.1 | 5.2 | 6.1 |
| | 6.2 | 6.3 | 6.4 | 7.1 | 7.2 | 7.3 | 7.4 | 8.1 | 8.2 | 8.3 | | | | | | | | | | |
| • | 1.7 | 1.8 | 5.3 | 10.1 | | | | | | | | | | | | | | | | |

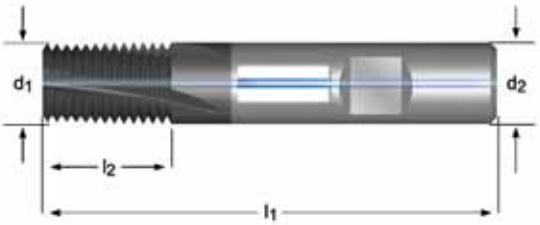


J245

1/4 - 3/4

| ⅜ | TPI | $d_1$ Ø mm | $l_2$ mm | $l_1$ mm | $d_2$ Ø mm | z | J245 |
|---|---|---|---|---|---|---|---|
| 1/4 | 28 | 4.80 | 14.0 | 57 | 6 | 3 | J2454.8-28 |
| 5/16. 3/8 | 24 | 6.00 | 14.0 | 57 | 6 | 3 | J2456.0-24 |
| 7/16. 1/2 | 20 | 8.00 | 19.0 | 63 | 8 | 4 | J2458.0-20 |
| 9/16. 5/8 | 18 | 10.00 | 22.0 | 72 | 10 | 4 | J24510.0-18 |
| 3/4 | 16 | 14.00 | 32.0 | 83 | 14 | 5 | J24514.0-16 |

DORMER

J280 G DORMER 1.5XD HM λ10° Alcrona Pro

# J280

- G(BSP)螺纹铣削螺旋角度10°
- Fresa Interpoladora de Rosca G(BSP) com Canal Helicoidal 10°
- Fresa para rosca G(BSP) con ángulo de hélice de 10°
- G(BSP) Thread Mill Spiral Flute 10°

内螺纹和外螺纹
Rosca Interna e Externa
Rosca exterior e interior
Internal and External Thread

| J280 | | | | | | | | | | | | | | | | | | | | | |
|---|---|---|---|---|---|---|---|---|---|---|---|---|---|---|---|---|---|---|---|---|---|
| ■ | 1.1 | 1.2 | 1.3 | 1.4 | 1.5 | 1.6 | 3.1 | 3.2 | 3.3 | 3.4 | 4.1 | 4.2 | 4.3 | 6.1 | 6.2 | 6.3 | 6.4 | 7.1 | 7.2 | 7.3 | |
| | 7.4 | 8.1 | 8.2 | 8.3 | | | | | | | | | | | | | | | | | |
| ● | 1.7 | 1.8 | 2.1 | 2.2 | 2.3 | 2.4 | 5.1 | 5.2 | 5.3 | 10.1 | | | | | | | | | | | |

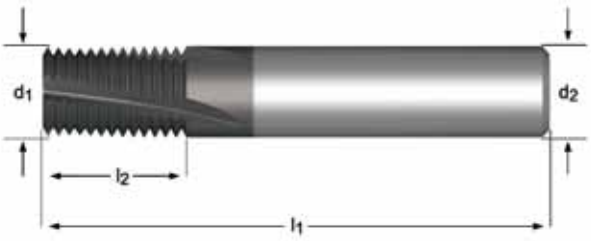


J280

1/8 - 3“

| ≥ | TPI | $d_1$ Ø mm | $l_2$ mm | $l_1$ mm | $d_2$ Ø mm | z | J280 |
|---|---|---|---|---|---|---|---|
| 1/8 | 28 | 6.00 | 15.0 | 57 | 6 | 3 | J2806.0-28 |
| 1/4 | 19 | 10.00 | 20.0 | 72 | 10 | 4 | J28010.0-19 |
| 3/8 | 19 | 14.00 | 26.0 | 83 | 14 | 5 | J28014.0-19 |
| 1/2. 5/8 | 14 | 16.00 | 30.0 | 92 | 16 | 5 | J28016.0-14 |
| 5/8. 3/4. 7/8 | 14 | 20.00 | 35.0 | 104 | 20 | 5 | J28020.0-14 |
| 1“. 3“ | 11 | 25.00 | 45.0 | 121 | 25 | 6 | J28025.0-11 |

J260 NPT DORMER HM λ10° Alcrona Pro

# J260

- NPT螺纹铣削螺旋角度10°
- Fresa Interpoladora de Rosca NPT com Canal Helicoidal 10°
- Fresa para rosca NPT con ángulo de hélice de 10°
- NPT Thread Mill Spiral Flute 10°

内螺纹
Rosca Interna
Rosca interior
Internal Thread

| J260 | | | | | | | | | | | | | | | | | | | | | |
|---|---|---|---|---|---|---|---|---|---|---|---|---|---|---|---|---|---|---|---|---|---|
| ■ | 1.1 | 1.2 | 1.3 | 1.4 | 1.5 | 1.6 | 2.4 | 3.1 | 3.2 | 3.3 | 3.4 | 4.1 | 4.2 | 4.3 | 6.1 | 6.2 | 6.3 | 6.4 | 7.1 | 7.2 | |
| | 7.3 | 7.4 | 8.1 | 8.2 | 8.3 | | | | | | | | | | | | | | | | |
| ● | 1.7 | 1.8 | 2.1 | 2.2 | 2.3 | 2.4 | 5.1 | 5.2 | 5.3 | 10.1 | | | | | | | | | | | |

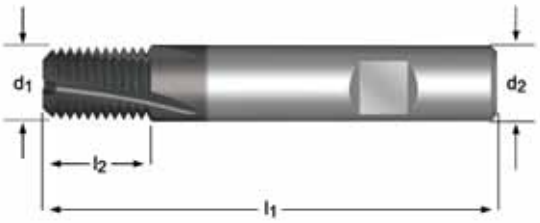


J260

1/8 - 2"

| ≥ | TPI | $d_1$ Ø mm | $l_2$ mm | $l_1$ mm | $d_2$ Ø mm | z | J260 |
|---|---|---|---|---|---|---|---|
| 1/8 | 27 | 7.90 | 11.50 | 58 | 8 | 3 | J2607.9-27 |
| 1/4. 3/8 | 18 | 9.90 | 15.92 | 66 | 10 | 3 | J2609.9-18 |
| 1/2. 3/4 | 14 | 15.90 | 20.46 | 82 | 16 | 4 | J26015.9-14 |
| 1". 2" | 11.5 | 19.90 | 27.12 | 92 | 20 | 5 | J26019.9-11.5 |

# SIMPLY RELIABLE

专业的定义就是你通过铁屑可以判断我们的工件质量。我们的铁屑通过干净和简单的形状来讲述它的故事。
这个是一个明确和一致的信号为什么我们使用它作为Simply reliable的符号。


**Argentina**
T: 54 (11) 6777-6777
F: 54 (11) 4441-4467
dormer.ar@dormertools.com

**Australia**
T: 1300 131 274
F: +61 3 9238 7105
dormer.int@dormertools.com

**Brazil**
responsible for **Bolivia, Panama, Chile, Paraguay, Colombia, Peru, Costa Rica, Uruguay, Ecuador, Venezuela, Guatemala**
T: +55 11 5660 3000
F: +55 11 5667 5883
dormer.br@dormertools.com

**Canada**
T: (888) 336 7637
En Français: (888) 368 8457
F: (905) 542 7000
cs.canada@dormertools.com

**China**
T: +86 21 24160508
F: +86 21 5442 6315
dormer.cn@dormertools.com

**Czech Republic**
responsible for **Export CEE, Romania, Macedonia, Slovenia, Serbia, Ukraine, Bosnia-Herzegovina, Croatia, Belarus, Montenegro, Bulgaria**
pramet.info.row@pramet.com
T: +420 583 381 111
F: +420 583 215 401
pramet.info.cz@pramet.com

**Denmark**
T: +45 43 46 52 80
F: +45 43 46 52 81
dormer.dk@dormertools.com
Kundetjeneste
T: direkt 808 82106
F: direkt +46 35 16 52 90

**Dormer Tools International**
responsible for **Middle East, Far East**
T: +44 1246 571338
F: +44 1246 571339
dormer.int@dormertools.com

**Finland**
T: +358 205 44 121
F: +358 205 44 5199
Customer Service
T: direkt 0205 44 7003
F: direkt 0205 44 7004
dormer.fi@dormertools.com

**France**
T: +33 (0)2 47 62 57 01
F: +33 (0)2 47 62 52 00
dormer.fr@dormertools.com

**Germany**
T: +49 9131 933 08 70
F: +49 9131 933 08 742
dormer.de@dormertools.com

**Hungary**
T: +36-96 / 522-846
F: +36-96 / 522-847
pramet.info.hu@pramet. com

**India**
T: +91 124 470 3825
dormer.in@dormertools.com

**Italy**
T: +39 02 38 04 51
F: +39 02 38 04 52 43
dormer.it@dormertools.com

**Netherlands**
T: +31 10 2080 240
F: +31 10 2080 282
dormer.nl@dormertools.com
responsible for
**Austria**
T: +31 10 2080 212
F: +31 10 2080 282
dormer.at@dormertools.com
and
**Belgium**
T: +32 3 440 59 01
F: +32 3 449 15 43
Email: dormer.be@dormertools.com
and
**Switzerland**
T: +31 10 2080 212
F: +31 10 2080 282
dormer.ch@dormertools.com

**New Zealand**
T: +64 9 2735858
F: +64 9 2735857
dormer.int@dormertools.com

**Norway**
T:+47 67 17 56 00
F:+47 66 85 96 10
dormer.no@dormertools.com
Kundeservice
T: direkt 800 10 113
F: direkt +46 35 16 52 90

**Poland**
T: +48 32 78-15-890
F: +48 32 78-60-406
pramet.info.pl@pramet.com

**Russia**
T: +7 495 775 10 28
pramet.info.ru@pramet.com

**Slovakia**
T: +421 417 645 659
F:+421 417 637 449
pramet.info.sk@pramet.com

**Spain**
T: +34 935717722
F: +34 935717765
info.safety-iberica@safety-cuttingtools.com
responsible for
**Portugal**
T: +351 21 424 54 21
F: +351 21 424 54 25

**Sweden**
responsible for
**Iceland, Lithuania, Latvia, Estonia**
T: +46 (0) 35 16 52 00
F: +46 (0) 35 16 52 90
dormer.se@dormertools.com
Kundservice
T: direkt +46 35 16 52 96
F: direkt +46 35 16 52 90

**United Kingdom**
responsible for **Ireland**
T: 0870 850 4466
F: 0870 850 8866
dormer.uk@dormertools.com

**United States of America**
responsible for **Mexico**
T: (800) 877-3745
F: (847) 783-5760
cs@dormertools. com


DORMER PRAMET

2015.1 TMC CN

www.dormerpramet.com
facebook.com/dormerpramet
twitter.com/dormerpramet
youtube.com/dormerpramet