ALLIED MACHINE & ENGINEERING

Holemaking Solutions for Today's Manufacturing

Drilling

Boring

Reaming

Threading

Roller Burnishing

BURNISHING

Finishing Solutions by S.C.A.M.I.®

Specials

S.C.A.M.I.®

North America

Allied Machine
120 Deeds Drive
Dover, OH 44622
United States

Allied Machine
485 West 3rd Street
Dover, OH 44622
United States

ThreadMills USA™
4185 Crosstowne Ct #B
Evans, GA 30809
United States

Superion™
1285 S Patton St.
Xenia, OH 45385
United States

Europe

Allied Machine Europe
93 Vantage Point
Pensnett Estate
Kingswinford
West Midlands
DY6 7FR, United Kingdom

Wohlhaupter® GmbH
Maybachstrasse 4
Postfach 1264
72636 Frickenhausen
Germany

Asia

Wohlhaupter® India
B-23, 2nd Floor
B Block Community Centre
Janakpuri, New Delhi - 110058
India

Allied Machine & Engineering is a worldwide leader in holemaking and finishing solutions. We are committed to providing practical and dependable solutions to our customers through innovative designs and superior customer and technical support.

We continue to expand our product offering in order to provide new and different solutions. With Field Sales Engineers located around the world, we position ourselves to provide technical support on site, right at your spindle.

ALLIED MACHINE & ENGINEERING®

www.alliedmachine.com

ALLIED MACHINE & ENGINEERING

Holemaking Solutions for Today's Manufacturing

S.C.A.M.I.® Roller Burnishing

The Foundation

Since 1941, Allied Machine & Engineering has provided dependable and practical holemaking solutions to the world. What was once a small job shop in Ohio is now a worldwide leader in cutting tool technology. With three manufacturing facilities in Ohio, one in Georgia, another in Germany, and headquarters in both the United States and Europe, Allied Machine is positioned to bring innovative solutions and technical expertise directly to the customers' hands.

The Beginning

Harold E. Stokey founded Allied Machine & Engineering to aid the war effort, manufacturing taper bearing lock nuts for the production of M1 tanks. Years later, after a sales meeting gone wrong, Stokey possessed a warehouse stocked with spade drill inserts. He set forth into the industry that would become Allied Machine's thriving identity: holemaking.

The T-A®

When Harold's son, William H. Stokey, became the president and CEO, he developed the Throw Away, or T-A, spade drill insert system. The T-A revolutionized the holemaking industry, launching Allied Machine ahead of the competition. Since then, numerous innovations and advancements have been created from the T-A's inspiration.

The Innovation

Since the development of the T-A, Allied Machine has expanded its product offering to support a vast range of customer applications, including large diameter and deep hole drilling, boring, reaming, burnishing, porting, and threading.

The People

Allied Machine understands that high quality products are only one facet of success. Our customer support is crucial to what we do, and that's why we make sure the best engineers and customer service associates are in place to assist our customers around the world.

The Future

With over 75 years of experience, Allied Machine has encountered the challenges of growth and success. By investing in cutting edge technology and the brightest and sharpest minds, our knowledge and capabilities continue to expand and grow every day.

Steve Stokey
Executive Vice President

William H. Stokey
President and CEO

Mike Stokey
Executive Vice President

WOHLHAUPTER® ThreadMills USA SUPERION™ CRITERION™

Replaceable Insert Drills

- Reduce costs by decreasing set-up time and utilizing a single holder for the lives of multiple inserts
- Provide flexibility to quickly switch between inserts with different geometries
- Products:
  - **GEN3SYS® XT | GEN3SYS® XT Pro**
  - **Original T-A® | GEN2 T-A®**
  - **High Performance | Universal**

Indexable Insert Drills

- Protect your investment and reduce your inventory with replaceable cartridges that allow the same holder to be used repeatedly
- Indexable inserts increase productivity and tool life while reducing costs
- Products:
  - **4TEX™ Drill**
  - **Revolution Drill®**
  - **Opening Drill®**

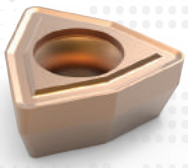

Replaceable / Indexable Insert Drills

- Allow for higher spindle speeds and take advantage of the power curve on modern CNC machines
- Achieve maximum penetration rates in deep hole drilling applications
- Holders cover a range of sizes with the replaceable heads determining the cutting diameter
- Products:
  - **APX Drill**

Solid Carbide Drills

- Offer greater strength and stability when drilling tougher materials
- Available in diameters from 3mm - 20mm
- Can be made-to-order specifically for your application (Superion™ quoted specials)
  - **ASC 320®**
  - **Superion™**

Structural Steel Solutions

- Deliver outstanding performance and durability in structural steel applications
- Designed to produce optimal results in difficult-to-machine materials
- Available in multiple lengths and diameters
- T-A® style drills have different insert geometry options to improve performance depending on material
- Products:
  - **Original T-A® | GEN2 T-A®**
  - **GEN3SYS® XT Pro**

BTA (STS) Machining Solutions

- The internal ejection system flushes chips and debris from the hole with no interference to the cutting process
- Utilizes the advantages of the T-A® drill insert
- Designed to significantly increase penetration rates over brazed heads and traditional gun drills
- Products:
  - **BT-A Drill**

Hydraulic Port Contour Cutters

- Save significant time and money by performing four processes in one step
- Replaceable insert design reduces costs, inventory, and set-up times
- Available in 4 industry specifications:
  - Imperial: SAE J-1926
  - Metric: ISO 6149-1:2006
  - Military: SAE AS5202
  - John Deere: JDS-G173.1
- Products:
  - **AccuPort 432®**

4 IN 1

Enhanced Special Drilling Capabilities

- Allied Machine Engineers are available to meet with you to evaluate your application and recommend the best solution for you
- Special drilling solutions can incorporate advanced features such as adjustable diameter locations, multiple steps, additional coolant designs, special lengths and diameters, and more
- Special drills can drastically reduce your cost-per-hole and increase your overall productivity by eliminating multiple processes and increasing tool life

WOHLHAUPTER®
High Precision Boring Systems

- Designs available for high volume applications that increase rigidity to improve performance
- Versatile boring heads that are flexible with changing applications while maintaining excellent performance
- Provides high precision with absolute repeatability to ensure every part is held to tolerance
- Offers an industry leading modular shank connection that maintains rigidity and reduces inventory on your boring system
- Available with both digital and analog settings
- Products:
  - **Wohlhaupter® Boring Tools**

CRITERION™
Modular Boring Systems

- The modular capabilities are ideal for use across multiple different projects
- Offers versatile boring heads suitable for all job shops and tooling rooms
- Provides an economical solution for low volume and/or short-term production applications
- Offers both rough and finish boring solutions
- Products:
  - **Criterion™ Boring Tools**

S.C.A.M.I.®
Expandable Reaming Solutions

- Expandable cutting diameters accommodate for wear, which extends tool life
- Replaceable cutting heads and rings reduce waste and improve production time versus solid high speed steel and carbide reamers
- Hold tight tolerances to ensure processes are performed to accurate specifications
- Reduce tooling costs because many items are available for recondition
- Products:
  - **ALVAN® Reamers**

S.C.A.M.I.®
Roller Burnishing Solutions

- Produce excellent surface finishes
- Provide accurate size control
- Increase surface hardness
- Solutions for both through hole and blind hole applications
- Products:
  - **S.C.A.M.I.® Roller Burnishing Tools**

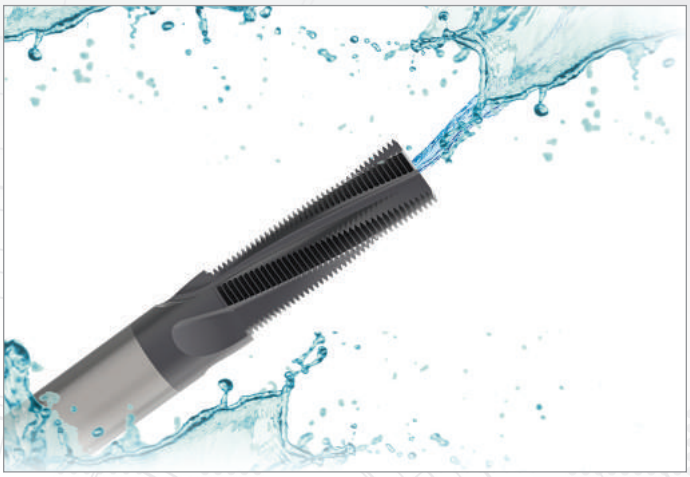

Solid Carbide Thread Mills

- Available with coolant through options
- Cover a wide range of thread forms
- Provide optimal solutions for both high production projects and short-run applications
- Products
  - **AccuThread™ 856**
  - **AccuThread™ T3**
  - **ThreadMills USA**

Replaceable Insert Thread Mills

- 3 insert lengths are available that cover a wide range of thread forms
- Holders can utilize inserts with different pitches and thread forms
- Repeatability is achieved by both the bolt-in style and the pin style locking systems
- Increase tool life by 25 - 50% with Allied Machine's AM210® coating
- Products
  - **AccuThread™ 856: Bolt-in Style**
  - **AccuThread™ 856: Pin Style**

SPECIAL CAPABILITIES

When it comes to designing and developing special solutions for customers, Allied Machine is the top choice. If your application requires special tooling, give us a call. Our engineered specials are developed by the brightest engineers in the industry. Most of our standard tooling can be altered as specials, or we can create entirely new concepts for particularly unique applications.

One special tooling solution is Insta-Quote™, the online system that allows you to design your own special tooling 24/7. Receive a quote and drawings within minutes just by following the steps.

And with the addition of Superion™ technology and capabilities, we can customize made-to-order solid carbide tools to achieve optimal results for your applications.

Whatever your application, Allied Machine has the answer.

Insta-Quote™

SUPERION™

Roller Burnishing Systems

Through Hole Style | Blind Hole Style

S.C.A.M.I.®

Get the Finish You Need

Allied Machine is proud to offer roller burnishing tools from S.C.A.M.I.®. These hole finishing tools provide extremely high-quality surface finish on both through hole and blind hole applications. With roller burnishing, you can eliminate the need for slower and more costly finishing processes and secondary operations such as grinding, honing, and lapping.

Not only will the roller burnishing tools create a smooth surface finish, but they will also harden the material and increase the wear resistance of the part. The benefits of this single operation result in the hole quality you should expect from Allied Machine.

Creates fine surface finshes	Increases wear and corrosion resistance	Eliminates other processes and saves you money

Applicable Industries

Aerospace | Agriculture | Automotive | Firearms | General Machining | Oil & Gas | Renewable Energy

Your safety and the safety of others is very important. This catalog contains important safety messages. Always read and follow all safety precautions.

This triangle is a safety hazard symbol. It alerts you to potential safety hazards that can cause tool failure and serious injury.

When you see this symbol in the catalog, look for a related safety message that may be near this triangle or referred to in the nearby text.

There are safety signal words also used in the catalog. Safety messages follow these words.

WARNING

WARNING (shown above) means that failure to follow the precautions in this message could result in tool failure and serious injury.

NOTICE means that failure to follow the precautions in this message could result in damage to the tool or machine but not result in personal injury.

NOTE and **IMPORTANT** are also used. These are important that you read and follow but are not safety-related.

Visit www.alliedmachine.com for the most up-to-date information and procedures.

Reference Icons
The following icons will appear throughout the catalog to help you navigate between products.

Technical Information
Detailed instructions and information regarding the corresponding part(s)

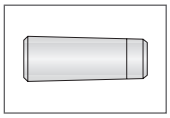

Through Hole Rolls
Refers to the rolls available for through hole burnishing tools

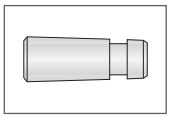

Blind Hole Rolls
Refers to the rolls available for blind hole burnishing tools

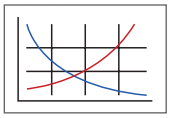

Recommended Cutting Data
Speed and feed recommendations for optimum and safe burnishing

Series	Diameter Range	
	Imperial (inch)	Metric (mm)
H	0.1555 - 0.5028	3.95 - 12.77
I	0.4976 - 0.6634	12.64 - 16.85
K	0.6535 - 0.9740	16.60 - 24.74
L	0.9661 - 1.2268	24.54 - 31.16
F	0.9661 - 1.2268	24.54 - 31.16
M	1.2146 - 1.4118	30.85 - 35.86
N	1.4020 - 1.8492	35.61 - 46.97
O	1.8390 - 2.2240	46.71 - 56.49
P	2.2138 - 2.7240	56.23 - 69.19
Q	2.7138 - 3.3492	68.93 - 85.07
R	3.3390 - 4.0992	84.81 - 104.12
S	4.0890 - 5.0370	103.86 - 127.94
T	5.0354 - 5.9016	127.90 - 149.90
U	5.9016 - 6.5315	149.90 - 165.90

S.C.A.M.I.®

Allied Machine & Engineering offers Roller Burnishing tools through an exclusive supply agreement with S.C.A.M.I. s.n.c.

S.C.A.M.I. is an Italian manufacturer that has been producing high quality cutting tools for over 40 years.

Visit www.alliedmachine.com for additional information about all Allied Machine products, or contact our Application Engineering department for technical assistance.

Roller Burnishing Systems Contents

Introduction Information

Roller Burnishing Overview . . . . . 2 - 3
Product Offering 4
Product Selection Guide 5
Product Nomenclature 6

Burnishing Series

H Series . . . . . 7 - 11
I Series . . . . . 12 - 13
K Series . . . . . 14 - 15
L Series . . . . . 16 - 17
F Series . . . . . 18 - 19
M Series . . . . . 20 - 21
N Series . . . . . 22 - 23
O Series . . . . . 24 - 25
P Series . . . . . 26 - 27
Q Series . . . . . 28 - 29
R Series . . . . . 30 - 31
S Series . . . . . 32 - 33
T Series . . . . . 34 - 35
U Series . . . . . 36 - 37

Rolls . . . . . 38 - 39

Technical Information

Diameter Adjustment 40
How the Burnisher Works 41

Recommended Cutting Data

Imperial (inch) . . . . . 42 - 43
Metric (mm) . . . . . 44 - 45

Roller Burnishing Overview

The Principle of Roller Burnishing

Roller burnishing is a cold-working process that produces a fine surface finish. The planetary rotation of the hardened rolls creates pressure over a metal surface. Unlike cold rolling, which produces large sectional changes, roller burnishing involves cold-working on the surface of the workpiece to improve the surface structure.

All machined surfaces consist of a series of peaks and valleys, all having irregular height and spacing. The plastic deformation created by roller burnishing is a displacement of the material in the peaks. When under pressure, the material in the peaks flows into the valleys. During the process, tool marks and irregularities are rolled out, resulting in a mirror-like finish with a tough, work-hardened surface that is also wear and corrosion resistant.

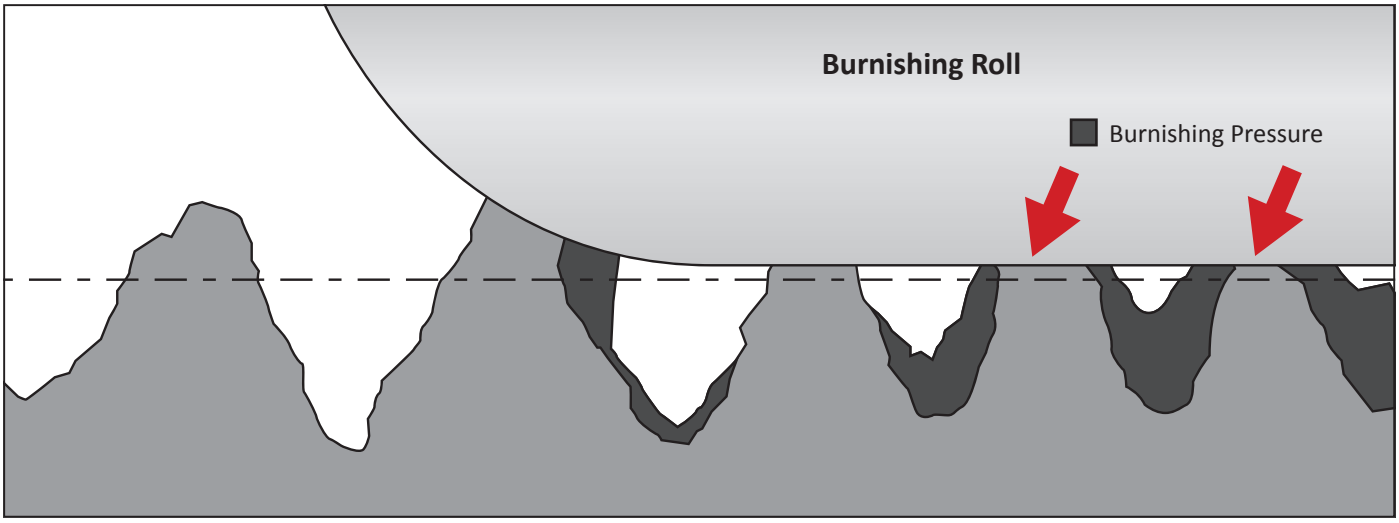

Advantages of Roller Burnishing: Metallurgical Properties

- Grain structure is condensed and refined.
- The compacted surface is ***smoother, harder, and more wear resistant*** than ground or honed surfaces.
- The process reduces surface porosity and also removes scratches that could hold reactive substances or contaminants. ***This increases the corrosion resistance***.
- Depending on the material, the surface hardness can be ***increased by as much as 10 points Rockwell C***. This may eliminate the need for heat treatment.
- The plastic deformation induces residual compressive stresses in the surface of the part. This increases the strength properties and fatigue life of the part because any forces on the part must overcome these residual stresses, as well as the tensile strength of the materials, before fatigue conditions occur.

Advantages of Roller Burnishing: Surface Finish

- Creates a high finish to any machinable metal.
- Surfaces that are bored, reamed, or turned to 125 micro inches or more can be finished to 4 micro inch CLA or less in one pass (at feed rates of 125 to 300 mm/min).
- Roller burnishing replaces grinding, honing, lapping, and other expensive secondary operations.
- Tool marks are rolled out.

The Process

- The first contact with the machined surface occurs in Section A.
- Plastic deformation occurs in Section B as the yield point of the surface is exceeded.
- Section D is the pressurized depth.
- Once the material endures the maximum compressive strain (Section C), it starts relieving elastically (Section E) through the finishing zone.
- This leaves a smooth surface and a compressive residual stress of significant peak value.
- The stresses formed on the material during the compression decrease toward the center. These stresses reach approximately 1mm below the surface. This increases the surface hardness.

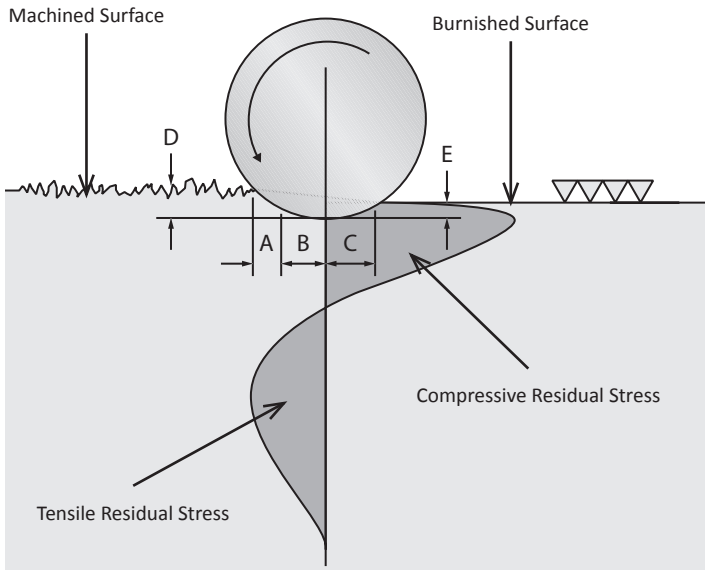

Roller Burnishing Overview

When to Roller Burnish

Conditions for Roller Burnishing

Roller burnishing is a cold working process used to achieve fine hole finishes. In order to achieve the most optimal results, adhere to the benchmarks below:

- **Finishing:** The ductility and hardness of the workpiece material along with the surface preparation dictates the quality of the burnished finish.
- **Workability:** Any ductile and malleable material up to RC40 can be roller burnished.
- **Worked Surface Properties:** Workpieces with an interrupted surface within 10% of the circumference can be successfully burnished with a standard tool (see Figures 1 and 2).

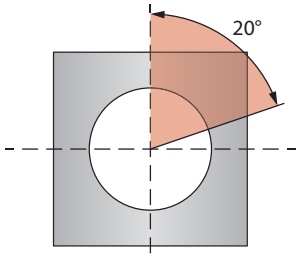

Figure 1

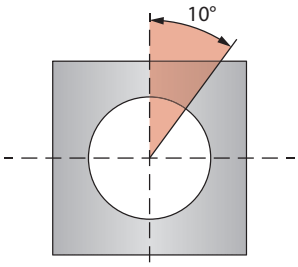

Figure 2

- **Tolerance of the Burnished Piece:** The tolerance range achieved from the burnishing will be equal to that achieved from the pre-machining since no material will be removed.

The ideal surface for burnishing consists of a succession of peaks. These peaks correspond on regular feed of the preparation tool (see Figure 3). We suggest the ALVAN® expandable reamer for pre-burnishing because it creates a uniform roughness and a tolerance range of H6 - H7.

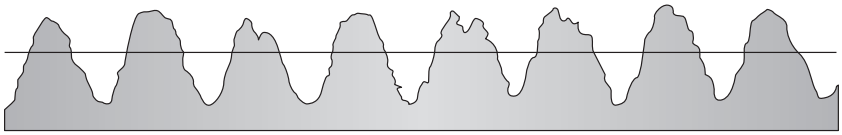

Figure 3

Pre-machining tapers and surface irregularities caused by cutting tool failure must be noted because these conditions cannot be corrected by the roller burnishing process (see Figures 4 and 5).

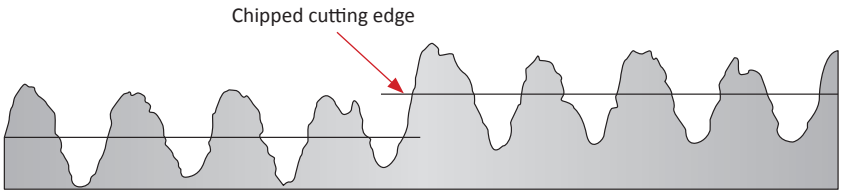

Figure 4

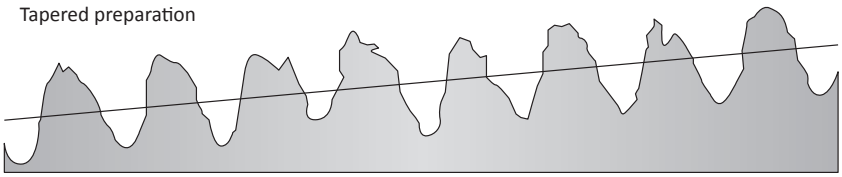

Figure 5

Product Offering

Through Hole Style
0.1555" - 6.5313" (3.95mm - 165.90mm)

Blind Hole Style
0.1850" - 6.5313" (4.70mm - 165.90mm)

Advantages of the Roller Burnishing Tool

- ***Provides accurate size control***
  tolerances within 0.0005" or better (depending on variables such as material)
- ***Produces fine surface finishes***
  between 1 - 10 microinches Ra
- ***Increases surface hardness***
  by 5 - 10% or more
- ***Performs a much cleaner operation***
  than honing or other abrasive finishing methods
- ***Provides versatility***
  because the operation can be performed on any rotating spindle
- ***Eliminates the need for slower and costly finishing processes and secondary operations***
  such as grinding, honing, lapping, etc.

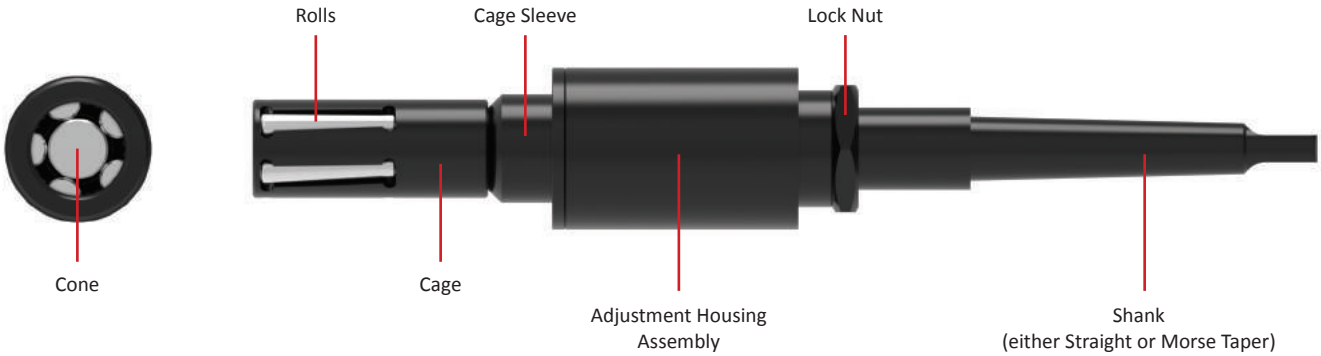

The Tool Components

All roller burnishing tools (both through hole and blind hole) are composed of the basic burnisher assembly, including:

- Cage
- Cone
- Rolls
- Shank (either straight or Morse Taper)

Product Selection Guide

Series	Diameter Range (inch / mm)							Length			
	0 - 1 — 0 - 25.4	1 - 2 — 25.4 - 50.8	2 - 3 — 50.8 - 76.2	3 - 4 — 76.2 - 101.6	4 - 5 — 101.6 - 127	5 - 6 — 127 - 152.4	6 - 7 — 152.4 - 177.8	Short	Standard	Long	Unlimited
H*	■							✓	✓	✓	
I	■							✓	✓	✓	
K	■							✓	✓	✓	
L	■	■						✓	✓	✓	
F	■	■									✓
M		■									✓
N		■									✓
O		■	■								✓
P			■								✓
Q			■	■							✓
R				■	■						✓
S					■	■					✓
T						■	■				✓
U							■				✓

*For H series: through hole tools start at 0.1555" (3.95mm) and blind hole tools start at 0.1850" (4.70mm)

When to ORDER UP

In some cases, there will be a diameter overlap between a series and the series after it. If the diameter you need falls into this overlap, choose the higher of the two series.

Example:
You need a 24.64mm diameter tool. This diameter falls into both the K series and the L series.

- K series diameter range = 16.60mm - 24.74mm
- L series diameter range = 24.54mm - 31.16mm

In this scenario, you would choose the L series tool that covers the 24.64 diameter.

Product Nomenclature

Roller Burnishing Tools

RDK	H	–	2	1	0	–	004,70
1	2		3	4	5		6

1. Type of Burnisher

RDK = Through holes

RSK = Blind holes

2. Series

H = H series
I = I series
K = K series
L = L series
F = F series
M = M series
N = N series
O = O series
P = P series
Q = Q series
R = R series
S = S series
T = T series
U = U series

3. Shank Type

1 = Straight

2 = Morse Taper

4. Length

0 = Unlimited

1 = Short

2 = Standard

3 = Long

5. Cage Style

0 = Standard

6. Diameter

Through Hole Tools = Minimum diameter of burnishing range

Blind Hole Tools = Diameter to burnish

Cone Reduction Factor (Blind Holes)

When burnishing blind holes, the cone must not extend past the end of the rolls. If it does, the cone will collide with the bottom of the hole. Each burnishing tool has an adjustment range of:

- Approximately 0.5mm on diameter for tools below 12.7mm
- Approximately 1.0mm on diameter for tools above 12.7mm

For through hole burnishing tools, the standard cone value "x" is 1. If the standard cone is used for blind hole burnishing, the only way it will not extend past the end of the rolls is to reduce the length of the cone. The required length reduction is dependent on the set diameter versus the minimum capable diameter of the tool. The factor of reduction (x) can be calculated using the formulas below and will be a whole integer number ranging from 2 - 8.

The "x" value could result in a decimal figure. If so, round down for answers below 0.6, and round up for answers 0.6 and above.

Diameter (5.89mm - 12.77mm)

$$x = 1 + \frac{Z - Y}{0.05}$$

Z = diameter of the hole
Y = minimum diameter setting of tool

Example: Z = 11.05 Y = 10.71mm

$$x = 1 + \frac{11.05 - 10.71}{0.05} = 7.8$$

which is approximated at "x" = 8

Correct Cone: RSTH-038-11025

Diameter (12.64mm - 127.94mm)

$$x = 1 + \frac{Z - Y}{0.10}$$

Z = diameter of the hole
Y = minimum diameter setting of tool

Example: Z = 17.76 Y = 17.40mm

$$x = 1 + \frac{17.76 - 17.40}{0.10} = 4.6$$

which is approximated at "x" = 4

Correct Cone: RSTK-034-00044

Diameter (127.90mm - 165.90mm)

$$x = 1 + \frac{Z - Y}{0.10}$$

Z = diameter of the hole
Y = minimum diameter setting of tool

Example: Z = 148.20 Y = 147.90mm

$$xx = 31 + \frac{148.20 - 147.90}{0.10} = 34$$

Correct Cone: RSTT-034-01480

Reference Key

Symbol	Attribute
D_1	Diameter range
L_2	Burnishing length
L_3	Reference length

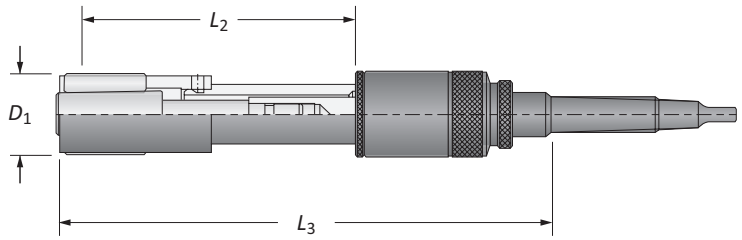

Roller Burnishing Tools | Through Holes

H Series (mini) | Diameter Range: 0.1555" - 0.1870" (3.95mm - 4.75mm)

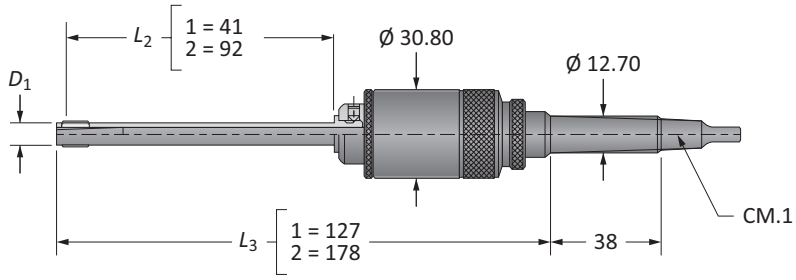

D_1			Part No.		Spare Parts			
Imperial (in)	Metric (mm)	L	Assembly with Morse Taper Shank	Assembly with Straight Shank	Cage	Cone	Rolls	Qty Rolls
0.1555 - 0.1634	3.95 - 4.15	1	**RDKH-212-00395**	**RDKH-112-00395**	RDCH-012-10005	RDTH-031-10012	RDRY-704-00047	3
0.1555 - 0.1634	3.95 - 4.15	2	**RDKH-222-00395**	**RDKH-122-00395**	RDCH-012-20005	RDTH-031-20012	RDRY-704-00047	3
0.1638 - 0.1713	4.16 - 4.35	1	**RDKH-212-00416**	**RDKH-112-00416**	RDCH-012-10006	RSTH-035-10012	RDRY-704-00047	3
0.1638 - 0.1713	4.16 - 4.35	2	**RDKH-222-00416**	**RDKH-122-00416**	RDCH-012-20006	RSTH-035-20012	RDRY-704-00047	3
0.1717 - 0.1791	4.36 - 4.55	1	**RDKH-212-00436**	**RDKH-112-00436**	RDCH-012-10007	RDTH-031-10013	RDRY-704-00047	3
0.1717 - 0.1791	4.36 - 4.55	2	**RDKH-222-00436**	**RDKH-122-00436**	RDCH-012-20007	RDTH-031-20013	RDRY-704-00047	3
0.1795 - 0.1870	4.56 - 4.75	1	**RDKH-212-00456**	**RDKH-112-00456**	RDCH-012-10008	RSTH-035-10013	RDRY-704-00047	3
0.1795 - 0.1870	4.56 - 4.75	2	**RDKH-222-00456**	**RDKH-122-00456**	RDCH-012-20008	RSTH-035-20013	RDRY-704-00047	3

NOTE: Each roller burnishing tool comes assembled complete with cage, cone, and rolls.

D: 42 - 45 | D: 40 - 41 | D: 38

Key on D: 1

Roller Burnishing Tools | Through Holes

H Series | Diameter Range: 0.1850" - 0.5028" (4.70mm - 12.77mm)

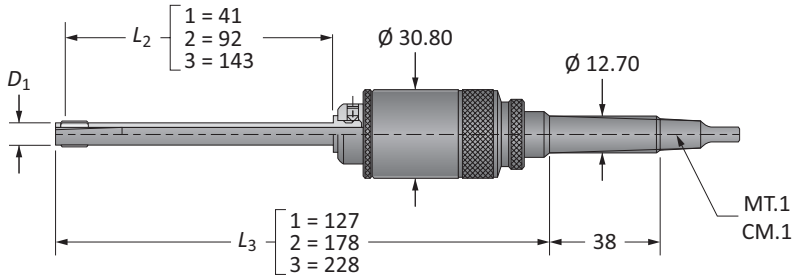

D_1			Part No.		Spare Parts			
Imperial (in)	Metric (mm)	L	Assembly with Morse Taper Shank	Assembly with Straight Shank	Cage	Cone	Rolls	Qty Rolls
0.1850 - 0.1929	4.70 - 4.90	1	**RDKH-210-00470**	**RDKH-110-00470**	RDCH-011-10012	RDTH-031-10012	RDRY-704-00062	3
0.1850 - 0.1929	4.70 - 4.90	2	**RDKH-220-00470**	**RDKH-120-00470**	RDCH-011-20012	RDTH-031-20012	RDRY-704-00062	3
0.1850 - 0.1929	4.70 - 4.90	3	**RDKH-230-00470**	**RDKH-130-00470**	RDCH-011-30012	RDTH-031-30012	RDRY-704-00062	3
0.1917 - 0.2035	4.87 - 5.17	1	**RDKH-210-00487**	**RDKH-110-00487**	RDCH-011-10011	RSTH-033-10012	RDRY-704-00062	3
0.1917 - 0.2035	4.87 - 5.17	2	**RDKH-220-00487**	**RDKH-120-00487**	RDCH-011-20011	RSTH-033-20012	RDRY-704-00062	3
0.1917 - 0.2035	4.87 - 5.17	3	**RDKH-230-00487**	**RDKH-130-00487**	RDCH-011-30011	RSTH-033-30012	RDRY-704-00062	3
0.1996 - 0.2200	5.07 - 5.59	1	**RDKH-210-00507**	**RDKH-110-00507**	RDCH-011-10013	RDTH-031-10013	RDRY-704-00062	5
0.1996 - 0.2200	5.07 - 5.59	2	**RDKH-220-00507**	**RDKH-120-00507**	RDCH-011-20013	RDTH-031-20013	RDRY-704-00062	5
0.1996 - 0.2200	5.07 - 5.59	3	**RDKH-230-00507**	**RDKH-130-00507**	RDCH-011-30013	RDTH-031-30013	RDRY-704-00062	5
0.2161 - 0.2358	5.49 - 5.99	1	**RDKH-210-00549**	**RDKH-110-00549**	RDCH-011-10014	RDTH-031-10013	RDRY-704-00070	5
0.2161 - 0.2358	5.49 - 5.99	2	**RDKH-220-00549**	**RDKH-120-00549**	RDCH-011-20014	RDTH-031-20013	RDRY-704-00070	5
0.2161 - 0.2358	5.49 - 5.99	3	**RDKH-230-00549**	**RDKH-130-00549**	RDCH-011-30014	RDTH-031-30013	RDRY-704-00070	5
0.2319 - 0.2524	5.89 - 6.41	1	**RDKH-210-00589**	**RDKH-110-00589**	RDCH-011-10015	RDTH-031-10015	RDRY-704-00070	5
0.2319 - 0.2524	5.89 - 6.41	2	**RDKH-220-00589**	**RDKH-120-00589**	RDCH-011-20015	RDTH-031-20015	RDRY-704-00070	5
0.2319 - 0.2524	5.89 - 6.41	3	**RDKH-230-00589**	**RDKH-130-00589**	RDCH-011-30015	RDTH-031-30015	RDRY-704-00070	5
0.2484 - 0.2681	6.31 - 6.81	1	**RDKH-210-00631**	**RDKH-110-00631**	RDCH-011-10016	RDTH-031-10015	RDRY-704-00078	5
0.2484 - 0.2681	6.31 - 6.81	2	**RDKH-220-00631**	**RDKH-120-00631**	RDCH-011-20016	RDTH-031-20015	RDRY-704-00078	5
0.2484 - 0.2681	6.31 - 6.81	3	**RDKH-230-00631**	**RDKH-130-00631**	RDCH-011-30016	RDTH-031-30015	RDRY-704-00078	5
0.2642 - 0.2839	6.71 - 7.21	1	**RDKH-210-00671**	**RDKH-110-00671**	RDCH-011-10017	RDTH-031-10017	RDRY-704-00078	5
0.2642 - 0.2839	6.71 - 7.21	2	**RDKH-220-00671**	**RDKH-120-00671**	RDCH-011-20017	RDTH-031-20017	RDRY-704-00078	5
0.2642 - 0.2839	6.71 - 7.21	3	**RDKH-230-00671**	**RDKH-130-00671**	RDCH-011-30017	RDTH-031-30017	RDRY-704-00078	5
0.2803 - 0.3000	7.12 - 7.62	1	**RDKH-210-00712**	**RDKH-110-00712**	RDCH-011-10018	RDTH-031-10017	RDRY-704-00086	5
0.2803 - 0.3000	7.12 - 7.62	2	**RDKH-220-00712**	**RDKH-120-00712**	RDCH-011-20018	RDTH-031-20017	RDRY-704-00086	5
0.2803 - 0.3000	7.12 - 7.62	3	**RDKH-230-00712**	**RDKH-130-00712**	RDCH-011-30018	RDTH-031-30017	RDRY-704-00086	5
0.2945 - 0.3142	7.48 - 7.98	1	**RDKH-210-00748**	**RDKH-110-00748**	RDCH-011-10019	RDTH-031-10019	RDRY-704-00086	5
0.2945 - 0.3142	7.48 - 7.98	2	**RDKH-220-00748**	**RDKH-120-00748**	RDCH-011-20019	RDTH-031-20019	RDRY-704-00086	5
0.2945 - 0.3142	7.48 - 7.98	3	**RDKH-230-00748**	**RDKH-130-00748**	RDCH-011-30019	RDTH-031-30019	RDRY-704-00086	5
0.3102 - 0.3299	7.88 - 8.38	1	**RDKH-210-00788**	**RDKH-110-00788**	RDCH-011-10020	RDTH-031-10019	RDRY-704-00093	5
0.3102 - 0.3299	7.88 - 8.38	2	**RDKH-220-00788**	**RDKH-120-00788**	RDCH-011-20020	RDTH-031-20019	RDRY-704-00093	5
0.3102 - 0.3299	7.88 - 8.38	3	**RDKH-230-00788**	**RDKH-130-00788**	RDCH-011-30020	RDTH-031-30019	RDRY-704-00093	5
0.3260 - 0.3461	8.28 - 8.79	1	**RDKH-210-00828**	**RDKH-110-00828**	RDCH-011-10021	RDTH-031-10021	RDRY-704-00093	5
0.3260 - 0.3461	8.28 - 8.79	2	**RDKH-220-00828**	**RDKH-120-00828**	RDCH-011-20021	RDTH-031-20021	RDRY-704-00093	5
0.3260 - 0.3461	8.28 - 8.79	3	**RDKH-230-00828**	**RDKH-130-00828**	RDCH-011-30021	RDTH-031-30021	RDRY-704-00093	5

NOTE: Each roller burnishing tool comes assembled complete with cage, cone, and rolls.

D: 42 - 45
Key on D: 1
D: 40 - 41
D: 38

Roller Burnishing Tools | Through Holes (continued)

H Series | Diameter Range: 0.1850" - 0.5028" (4.70mm - 12.77mm)

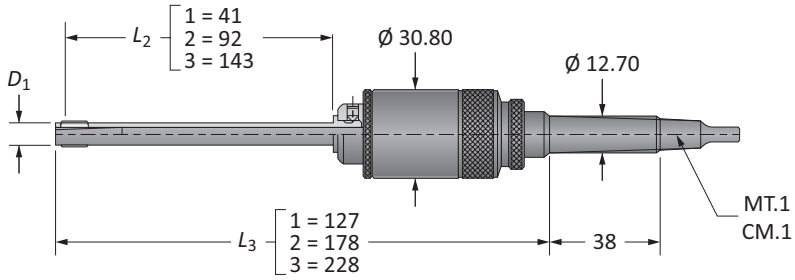

D_1			Part No.		Spare Parts			
Imperial (in)	Metric (mm)	L	Assembly with Morse Taper Shank	Assembly with Straight Shank	Cage	Cone	Rolls	Qty Rolls
0.3410 - 0.3606	8.66 - 9.16	1	**RDKH-210-00866**	**RDKH-110-00866**	RDCH-011-10022	RDTH-031-10019	RDRY-704-00109	5
0.3410 - 0.3606	8.66 - 9.16	2	**RDKH-220-00866**	**RDKH-120-00866**	RDCH-011-20022	RDTH-031-20019	RDRY-704-00109	5
0.3410 - 0.3606	8.66 - 9.16	3	**RDKH-230-00866**	**RDKH-130-00866**	RDCH-011-30022	RDTH-031-30019	RDRY-704-00109	5
0.3567 - 0.3768	9.06 - 9.57	1	**RDKH-210-00906**	**RDKH-110-00906**	RDCH-011-10023	RDTH-031-10021	RDRY-704-00109	5
0.3567 - 0.3768	9.06 - 9.57	2	**RDKH-220-00906**	**RDKH-120-00906**	RDCH-011-20023	RDTH-031-20021	RDRY-704-00109	5
0.3567 - 0.3768	9.06 - 9.57	3	**RDKH-230-00906**	**RDKH-130-00906**	RDCH-011-30023	RDTH-031-30021	RDRY-704-00109	5
0.3732 - 0.3933	9.48 - 9.99	1	**RDKH-210-00948**	**RDKH-110-00948**	RDCH-011-10024	RDTH-031-10024	RDRY-704-00109	5
0.3732 - 0.3933	9.48 - 9.99	2	**RDKH-220-00948**	**RDKH-120-00948**	RDCH-011-20024	RDTH-031-20024	RDRY-704-00109	5
0.3732 - 0.3933	9.48 - 9.99	3	**RDKH-230-00948**	**RDKH-130-00948**	RDCH-011-30024	RDTH-031-30024	RDRY-704-00109	5
0.3902 - 0.4102	9.91 - 10.42	1	**RDKH-210-00991**	**RDKH-110-00991**	RDCH-011-10025	RDTH-031-10025	RDRY-704-00109	5
0.3902 - 0.4102	9.91 - 10.42	2	**RDKH-220-00991**	**RDKH-120-00991**	RDCH-011-20025	RDTH-031-20025	RDRY-704-00109	5
0.3902 - 0.4102	9.91 - 10.42	3	**RDKH-230-00991**	**RDKH-130-00991**	RDCH-011-30025	RDTH-031-30025	RDRY-704-00109	5
0.4051 - 0.4252	10.29 - 10.80	1	**RDKH-210-01029**	**RDKH-110-01029**	RDCH-011-10026	RDTH-031-10024	RDRY-704-00125	5
0.4051 - 0.4252	10.29 - 10.80	2	**RDKH-220-01029**	**RDKH-120-01029**	RDCH-011-20026	RDTH-031-20024	RDRY-704-00125	5
0.4051 - 0.4252	10.29 - 10.80	3	**RDKH-230-01029**	**RDKH-130-01029**	RDCH-011-30026	RDTH-031-30024	RDRY-704-00125	5
0.4217 - 0.4413	10.71 - 11.21	1	**RDKH-210-01071**	**RDKH-110-01071**	RDCH-011-10027	RDTH-031-10025	RDRY-704-00125	5
0.4217 - 0.4413	10.71 - 11.21	2	**RDKH-220-01071**	**RDKH-120-01071**	RDCH-011-20027	RDTH-031-20025	RDRY-704-00125	5
0.4217 - 0.4413	10.71 - 11.21	3	**RDKH-230-01071**	**RDKH-130-01071**	RDCH-011-30027	RDTH-031-30025	RDRY-704-00125	5
0.4374 - 0.4571	11.11 - 11.61	1	**RDKH-210-01111**	**RDKH-110-01111**	RDCH-011-10028	RDTH-031-10028	RDRY-704-00125	5
0.4374 - 0.4571	11.11 - 11.61	2	**RDKH-220-01111**	**RDKH-120-01111**	RDCH-011-20028	RDTH-031-20028	RDRY-704-00125	5
0.4374 - 0.4571	11.11 - 11.61	3	**RDKH-230-01111**	**RDKH-130-01111**	RDCH-011-30028	RDTH-031-30028	RDRY-704-00125	5
0.4512 - 0.4709	11.46 - 11.96	1	**RDKH-210-01146**	**RDKH-110-01146**	RDCH-011-10029	RDTH-031-10024	RDRY-704-00148	5
0.4512 - 0.4709	11.46 - 11.96	2	**RDKH-220-01146**	**RDKH-120-01146**	RDCH-011-20029	RDTH-031-20024	RDRY-704-00148	5
0.4512 - 0.4709	11.46 - 11.96	3	**RDKH-230-01146**	**RDKH-130-01146**	RDCH-011-30029	RDTH-031-30024	RDRY-704-00148	5
0.4681 - 0.4878	11.89 - 12.39	1	**RDKH-210-01189**	**RDKH-110-01189**	RDCH-011-10030	RDTH-031-10025	RDRY-704-00148	5
0.4681 - 0.4878	11.89 - 12.39	2	**RDKH-220-01189**	**RDKH-120-01189**	RDCH-011-20030	RDTH-031-20025	RDRY-704-00148	5
0.4681 - 0.4878	11.89 - 12.39	3	**RDKH-230-01189**	**RDKH-130-01189**	RDCH-011-30030	RDTH-031-30025	RDRY-704-00148	5
0.4831 - 0.5028	12.27 - 12.77	1	**RDKH-210-01227**	**RDKH-110-01227**	RDCH-011-10031	RDTH-031-10028	RDRY-704-00148	5
0.4831 - 0.5028	12.27 - 12.77	2	**RDKH-220-01227**	**RDKH-120-01227**	RDCH-011-20031	RDTH-031-20028	RDRY-704-00148	5
0.4831 - 0.5028	12.27 - 12.77	3	**RDKH-230-01227**	**RDKH-130-01227**	RDCH-011-30031	RDTH-031-30028	RDRY-704-00148	5

NOTE: Each roller burnishing tool comes assembled complete with cage, cone, and rolls.

D: 42 - 45 | D: 40 - 41 | D: 38

Key on D: 1

Roller Burnishing Tools | Blind Holes

H Series | Diameter Range: 0.2319" - 0.5028" (5.89mm - 12.77mm)

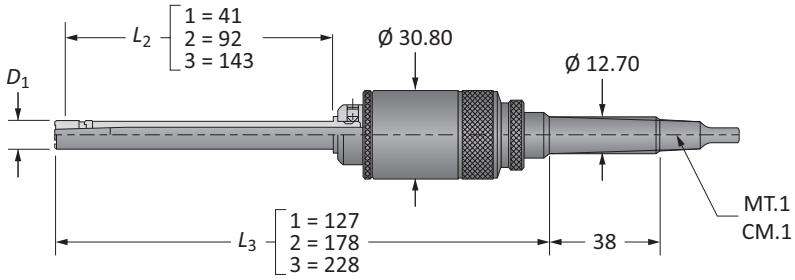

D_1			Part No.*		Spare Parts			
Imperial (in)	Metric (mm)	*L*	Assembly with Morse Taper Shank	Assembly with Straight Shank	Cage	Cone**	Rolls	Qty Rolls
0.2319 - 0.2524	5.89 - 6.41	1	**RSKH-210-xxxxx**	**RSKH-110-xxxxx**	RSCH-015-10015	RSTH-03x-10012	RSRY-708-00086	3
0.2319 - 0.2524	5.89 - 6.41	2	**RSKH-220-xxxxx**	**RSKH-120-xxxxx**	RSCH-015-20015	RSTH-03x-20012	RSRY-708-00086	3
0.2319 - 0.2524	5.89 - 6.41	3	**RSKH-230-xxxxx**	**RSKH-130-xxxxx**	RSCH-015-30015	RSTH-03x-30012	RSRY-708-00086	3
0.2484 - 0.2681	6.31 - 6.81	1	**RSKH-210-xxxxx**	**RSKH-110-xxxxx**	RSCH-015-10016	RSTH-03x-10013	RSRY-708-00086	3
0.2484 - 0.2681	6.31 - 6.81	2	**RSKH-220-xxxxx**	**RSKH-120-xxxxx**	RSCH-015-20016	RSTH-03x-20013	RSRY-708-00086	3
0.2484 - 0.2681	6.31 - 6.81	3	**RSKH-230-xxxxx**	**RSKH-130-xxxxx**	RSCH-015-30016	RSTH-03x-30013	RSRY-708-00086	3
0.2642 - 0.2839	6.71 - 7.21	1	**RSKH-210-xxxxx**	**RSKH-110-xxxxx**	RSCH-015-10017	RSTH-03x-10015	RSRY-708-00086	3
0.2642 - 0.2839	6.71 - 7.21	2	**RSKH-220-xxxxx**	**RSKH-120-xxxxx**	RSCH-015-20017	RSTH-03x-20015	RSRY-708-00086	3
0.2642 - 0.2839	6.71 - 7.21	3	**RSKH-230-xxxxx**	**RSKH-130-xxxxx**	RSCH-015-30017	RSTH-03x-30015	RSRY-708-00086	3
0.2803 - 0.3000	7.12 - 7.62	1	**RSKH-210-xxxxx**	**RSKH-110-xxxxx**	RSCH-015-10018	RSTH-03x-10017	RSRY-708-00086	3
0.2803 - 0.3000	7.12 - 7.62	2	**RSKH-220-xxxxx**	**RSKH-120-xxxxx**	RSCH-015-20018	RSTH-03x-20017	RSRY-708-00086	3
0.2803 - 0.3000	7.12 - 7.62	3	**RSKH-230-xxxxx**	**RSKH-130-xxxxx**	RSCH-015-30018	RSTH-03x-30017	RSRY-708-00086	3
0.2945 - 0.3142	7.48 - 7.98	1	**RSKH-210-xxxxx**	**RSKH-110-xxxxx**	RSCH-015-10019	RSTH-03x-10019	RSRY-708-00086	3
0.2945 - 0.3142	7.48 - 7.98	2	**RSKH-220-xxxxx**	**RSKH-120-xxxxx**	RSCH-015-20019	RSTH-03x-20019	RSRY-708-00086	3
0.2945 - 0.3142	7.48 - 7.98	3	**RSKH-230-xxxxx**	**RSKH-130-xxxxx**	RSCH-015-30019	RSTH-03x-30019	RSRY-708-00086	3
0.3102 - 0.3299	7.88 - 8.38	1	**RSKH-210-xxxxx**	**RSKH-110-xxxxx**	RSCH-015-10020	RSTH-03x-10021	RSRY-708-00086	3
0.3102 - 0.3299	7.88 - 8.38	2	**RSKH-220-xxxxx**	**RSKH-120-xxxxx**	RSCH-015-20020	RSTH-03x-20021	RSRY-708-00086	3
0.3102 - 0.3299	7.88 - 8.38	3	**RSKH-230-xxxxx**	**RSKH-130-xxxxx**	RSCH-015-30020	RSTH-03x-30021	RSRY-708-00086	3
0.3260 - 0.3461	8.28 - 8.79	1	**RSKH-210-xxxxx**	**RSKH-110-xxxxx**	RSCH-015-10021	RSTH-03x-10024	RSRY-708-00086	3
0.3260 - 0.3461	8.28 - 8.79	2	**RSKH-220-xxxxx**	**RSKH-120-xxxxx**	RSCH-015-20021	RSTH-03x-20024	RSRY-708-00086	3
0.3260 - 0.3461	8.28 - 8.79	3	**RSKH-230-xxxxx**	**RSKH-130-xxxxx**	RSCH-015-30021	RSTH-03x-30024	RSRY-708-00086	3
0.3410 - 0.3606	8.66 - 9.16	1	**RSKH-210-xxxxx**	**RSKH-110-xxxxx**	RSCH-015-10022	RSTH-03x-10015	RSRY-708-00125	3
0.3410 - 0.3606	8.66 - 9.16	2	**RSKH-220-xxxxx**	**RSKH-120-xxxxx**	RSCH-015-20022	RSTH-03x-20015	RSRY-708-00125	3
0.3410 - 0.3606	8.66 - 9.16	3	**RSKH-230-xxxxx**	**RSKH-130-xxxxx**	RSCH-015-30022	RSTH-03x-30015	RSRY-708-00125	3
0.3567 - 0.3768	9.06 - 9.57	1	**RSKH-210-xxxxx**	**RSKH-110-xxxxx**	RSCH-015-10023	RSTH-03x-10017	RSRY-708-00125	3
0.3567 - 0.3768	9.06 - 9.57	2	**RSKH-220-xxxxx**	**RSKH-120-xxxxx**	RSCH-015-20023	RSTH-03x-20017	RSRY-708-00125	3
0.3567 - 0.3768	9.06 - 9.57	3	**RSKH-230-xxxxx**	**RSKH-130-xxxxx**	RSCH-015-30023	RSTH-03x-30017	RSRY-708-00125	3

*xxxxx = Indicate to 2 metric decimal places the size to be burnished (e.g. short series roller burnisher Ø 10.25mm with MT.1 shank: RSKH-210-01025).
**x = A number that will vary from 2 to 8 depending upon the exact diameter to be burnished. See page D: 6 for the correct identification of the "x" value.
NOTE: Each roller burnishing tool comes assembled complete with cage, cone, and rolls.

D: 42 - 45
Key on D: 1
D: 40 - 41
D: 39

Roller Burnishing Tools | Blind Holes (continued)

H Series | Diameter Range: 0.2319" - 0.5028" (5.89mm - 12.77mm)

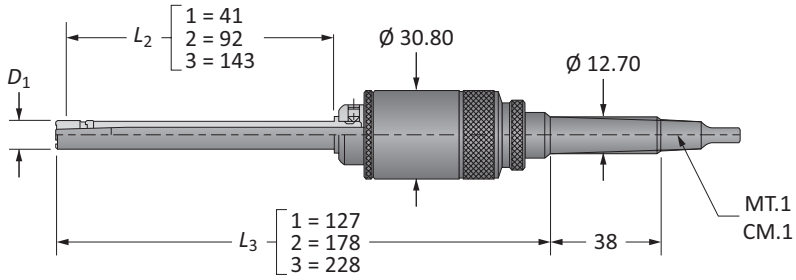

D_1			Part No.*		Spare Parts			
Imperial (in)	Metric (mm)	*L*	Assembly with Morse Taper Shank	Assembly with Straight Shank	Cage	Cone**	Rolls	Qty Rolls
0.3732 - 0.3933	9.48 - 9.99	1	**RSKH-210-xxxxx**	**RSKH-110-xxxxx**	RSCH-015-10024	RSTH-03x-10019	RSRY-708-00125	3
0.3732 - 0.3933	9.48 - 9.99	2	**RSKH-220-xxxxx**	**RSKH-120-xxxxx**	RSCH-015-20024	RSTH-03x-20019	RSRY-708-00125	3
0.3732 - 0.3933	9.48 - 9.99	3	**RSKH-230-xxxxx**	**RSKH-130-xxxxx**	RSCH-015-30024	RSTH-03x-30019	RSRY-708-00125	3
0.3902 - 0.4102	9.91 - 10.42	1	**RSKH-210-xxxxx**	**RSKH-110-xxxxx**	RSCH-015-10025	RSTH-03x-10021	RSRY-708-00125	3
0.3902 - 0.4102	9.91 - 10.42	2	**RSKH-220-xxxxx**	**RSKH-120-xxxxx**	RSCH-015-20025	RSTH-03x-20021	RSRY-708-00125	3
0.3902 - 0.4102	9.91 - 10.42	3	**RSKH-230-xxxxx**	**RSKH-130-xxxxx**	RSCH-015-30025	RSTH-03x-30021	RSRY-708-00125	3
0.4051 - 0.4252	10.29 - 10.80	1	**RSKH-210-xxxxx**	**RSKH-110-xxxxx**	RSCH-015-10026	RSTH-03x-10024	RSRY-708-00125	3
0.4051 - 0.4252	10.29 - 10.80	2	**RSKH-220-xxxxx**	**RSKH-120-xxxxx**	RSCH-015-20026	RSTH-03x-20024	RSRY-708-00125	3
0.4051 - 0.4252	10.29 - 10.80	3	**RSKH-230-xxxxx**	**RSKH-130-xxxxx**	RSCH-015-30026	RSTH-03x-30024	RSRY-708-00125	3
0.4217 - 0.4413	10.71 - 11.21	1	**RSKH-210-xxxxx**	**RSKH-110-xxxxx**	RSCH-015-10027	RSTH-03x-10025	RSRY-708-00125	3
0.4217 - 0.4413	10.71 - 11.21	2	**RSKH-220-xxxxx**	**RSKH-120-xxxxx**	RSCH-015-20027	RSTH-03x-20025	RSRY-708-00125	3
0.4217 - 0.4413	10.71 - 11.21	3	**RSKH-230-xxxxx**	**RSKH-130-xxxxx**	RSCH-015-30027	RSTH-03x-30025	RSRY-708-00125	3
0.4374 - 0.4571	11.11 - 11.61	1	**RSKH-210-xxxxx**	**RSKH-110-xxxxx**	RSCH-015-10028	RSTH-03x-10028	RSRY-708-00125	3
0.4374 - 0.4571	11.11 - 11.61	2	**RSKH-220-xxxxx**	**RSKH-120-xxxxx**	RSCH-015-20028	RSTH-03x-20028	RSRY-708-00125	3
0.4374 - 0.4571	11.11 - 11.61	3	**RSKH-230-xxxxx**	**RSKH-130-xxxxx**	RSCH-015-30028	RSTH-03x-30028	RSRY-708-00125	3
0.4512 - 0.4709	11.46 - 11.96	1	**RSKH-210-xxxxx**	**RSKH-110-xxxxx**	RSCH-015-10029	RSTH-03x-10021	RSRY-708-00156	3
0.4512 - 0.4709	11.46 - 11.96	2	**RSKH-220-xxxxx**	**RSKH-120-xxxxx**	RSCH-015-20029	RSTH-03x-20021	RSRY-708-00156	3
0.4512 - 0.4709	11.46 - 11.96	3	**RSKH-230-xxxxx**	**RSKH-130-xxxxx**	RSCH-015-30029	RSTH-03x-30021	RSRY-708-00156	3
0.4681 - 0.4878	11.89 - 12.39	1	**RSKH-210-xxxxx**	**RSKH-110-xxxxx**	RSCH-015-10030	RSTH-03x-10024	RSRY-708-00156	3
0.4681 - 0.4878	11.89 - 12.39	2	**RSKH-220-xxxxx**	**RSKH-120-xxxxx**	RSCH-015-20030	RSTH-03x-20024	RSRY-708-00156	3
0.4681 - 0.4878	11.89 - 12.39	3	**RSKH-230-xxxxx**	**RSKH-130-xxxxx**	RSCH-015-30030	RSTH-03x-30024	RSRY-708-00156	3
0.4831 - 0.5028	12.27 - 12.77	1	**RSKH-210-xxxxx**	**RSKH-110-xxxxx**	RSCH-015-10031	RSTH-03x-10025	RSRY-708-00156	3
0.4831 - 0.5028	12.27 - 12.77	2	**RSKH-220-xxxxx**	**RSKH-120-xxxxx**	RSCH-015-20031	RSTH-03x-20025	RSRY-708-00156	3
0.4831 - 0.5028	12.27 - 12.77	3	**RSKH-230-xxxxx**	**RSKH-130-xxxxx**	RSCH-015-30031	RSTH-03x-30025	RSRY-708-00156	3

*xxxxx = Indicate to 2 metric decimal places the size to be burnished (e.g. short series roller burnisher Ø 10.25mm with MT.1 shank: RSKH-210-01025).
**x = A number that will vary from 2 to 8 depending upon the exact diameter to be burnished. See page D: 6 for the correct identification of the "x" value.
NOTE: Each roller burnishing tool comes assembled complete with cage, cone, and rolls.

D: 42 - 45 | D: 40 - 41 | D: 39

Key on D: 1

Roller Burnishing Tools | Through Holes

I Series | Diameter Range: 0.4976" - 0.6634" (12.64mm - 16.85mm)

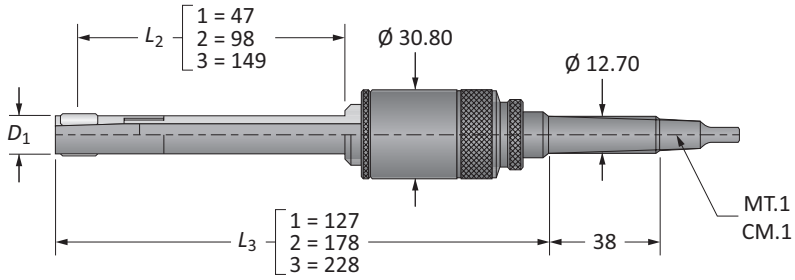

D_1			Part No.		Spare Parts			
Imperial (in)	Metric (mm)	L	Assembly with Morse Taper Shank	Assembly with Straight Shank	Cage	Cone	Rolls	Qty Rolls
0.4976 - 0.5315	12.64 - 13.50	1	**RDKI-210-01264**	**RDKI-110-01264**	RDCI-400-00500	RDTI-031-10032	RDRY-704-00156	5
0.4976 - 0.5315	12.64 - 13.50	2	**RDKI-220-01264**	**RDKI-120-01264**	RDCI-400-00500	RDTI-031-20032	RDRY-704-00156	5
0.4976 - 0.5315	12.64 - 13.50	3	**RDKI-230-01264**	**RDKI-130-01264**	RDCI-400-00500	RDTI-031-30032	RDRY-704-00156	5
0.5295 - 0.5689	13.45 - 14.45	1	**RDKI-210-01345**	**RDKI-110-01345**	RDCI-400-00531	RDTI-031-10034	RDRY-704-00156	5
0.5295 - 0.5689	13.45 - 14.45	2	**RDKI-220-01345**	**RDKI-120-01345**	RDCI-400-00531	RDTI-031-20034	RDRY-704-00156	5
0.5295 - 0.5689	13.45 - 14.45	3	**RDKI-230-01345**	**RDKI-130-01345**	RDCI-400-00531	RDTI-031-30034	RDRY-704-00156	5
0.5610 - 0.6004	14.25 - 15.25	1	**RDKI-210-01425**	**RDKI-110-01425**	RDCI-400-00562	RDTI-031-10034	RDRY-704-00172	5
0.5610 - 0.6004	14.25 - 15.25	2	**RDKI-220-01425**	**RDKI-120-01425**	RDCI-400-00562	RDTI-031-20034	RDRY-704-00172	5
0.5610 - 0.6004	14.25 - 15.25	3	**RDKI-230-01425**	**RDKI-130-01425**	RDCI-400-00562	RDTI-031-30034	RDRY-704-00172	5
0.5925 - 0.6319	15.05 - 16.05	1	**RDKI-210-01505**	**RDKI-110-01505**	RDCI-400-00593	RDTI-031-10038	RDRY-704-00172	5
0.5925 - 0.6319	15.05 - 16.05	2	**RDKI-220-01505**	**RDKI-120-01505**	RDCI-400-00593	RDTI-031-20038	RDRY-704-00172	5
0.5925 - 0.6319	15.05 - 16.05	3	**RDKI-230-01505**	**RDKI-130-01505**	RDCI-400-00593	RDTI-031-30038	RDRY-704-00172	5
0.6240 - 0.6634	15.85 - 16.85	1	**RDKI-210-01585**	**RDKI-110-01585**	RDCI-400-00625	RDTI-031-10038	RDRY-701-00187	5
0.6240 - 0.6634	15.85 - 16.85	2	**RDKI-220-01585**	**RDKI-120-01585**	RDCI-400-00625	RDTI-031-20038	RDRY-701-00187	5
0.6240 - 0.6634	15.85 - 16.85	3	**RDKI-230-01585**	**RDKI-130-01585**	RDCI-400-00625	RDTI-031-30038	RDRY-701-00187	5

NOTE: Each roller burnishing tool comes assembled complete with cage, cone, and rolls.

D: 42 - 45 | D: 40 - 41 | D: 38

Key on D: 1

Roller Burnishing Tools | Blind Holes

I Series | Diameter Range: 0.4976" - 0.6634" (12.64mm - 16.85mm)

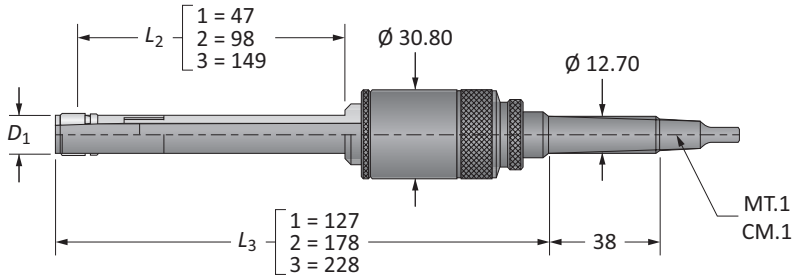

D_1			Part No.*		Spare Parts			
Imperial (in)	Metric (mm)	*L*	Assembly with Morse Taper Shank	Assembly with Straight Shank	Cage	Cone**	Rolls	Qty Rolls
0.4976 - 0.5315	12.64 - 13.50	1	**RSKI-210-xxxxx**	**RSKI-110-xxxxx**	RSCI-400-00500	RSTI-03X-10032	RSRY-708-00156	5
0.4976 - 0.5315	12.64 - 13.50	2	**RSKI-220-xxxxx**	**RSKI-120-xxxxx**	RSCI-400-00500	RSTI-03X-20032	RSRY-708-00156	5
0.4976 - 0.5315	12.64 - 13.50	3	**RSKI-230-xxxxx**	**RSKI-130-xxxxx**	RSCI-400-00500	RSTI-03X-30032	RSRY-708-00156	5
0.5295 - 0.5689	13.45 - 14.45	1	**RSKI-210-xxxxx**	**RSKI-110-xxxxx**	RSCI-400-00531	RSTI-03X-10034	RSRY-708-00156	5
0.5295 - 0.5689	13.45 - 14.45	2	**RSKI-220-xxxxx**	**RSKI-120-xxxxx**	RSCI-400-00531	RSTI-03X-20034	RSRY-708-00156	5
0.5295 - 0.5689	13.45 - 14.45	3	**RSKI-230-xxxxx**	**RSKI-130-xxxxx**	RSCI-400-00531	RSTI-03X-30034	RSRY-708-00156	5
0.5610 - 0.6004	14.25 - 15.25	1	**RSKI-210-xxxxx**	**RSKI-110-xxxxx**	RSCI-400-00562	RSTI-03X-10034	RSRY-708-00172	5
0.5610 - 0.6004	14.25 - 15.25	2	**RSKI-220-xxxxx**	**RSKI-120-xxxxx**	RSCI-400-00562	RSTI-03X-20034	RSRY-708-00172	5
0.5610 - 0.6004	14.25 - 15.25	3	**RSKI-230-xxxxx**	**RSKI-130-xxxxx**	RSCI-400-00562	RSTI-03X-30034	RSRY-708-00172	5
0.5925 - 0.6319	15.05 - 16.05	1	**RSKI-210-xxxxx**	**RSKI-110-xxxxx**	RSCI-400-00593	RSTI-03X-10038	RSRY-708-00172	5
0.5925 - 0.6319	15.05 - 16.05	2	**RSKI-220-xxxxx**	**RSKI-120-xxxxx**	RSCI-400-00593	RSTI-03X-20038	RSRY-708-00172	5
0.5925 - 0.6319	15.05 - 16.05	3	**RSKI-230-xxxxx**	**RSKI-130-xxxxx**	RSCI-400-00593	RSTI-03X-30038	RSRY-708-00172	5
0.6240 - 0.6634	15.85 - 16.85	1	**RSKI-210-xxxxx**	**RSKI-110-xxxxx**	RSCI-400-00625	RSTI-03X-10038	RSRY-708-00187	5
0.6240 - 0.6634	15.85 - 16.85	2	**RSKI-220-xxxxx**	**RSKI-120-xxxxx**	RSCI-400-00625	RSTI-03X-20038	RSRY-708-00187	5
0.6240 - 0.6634	15.85 - 16.85	3	**RSKI-230-xxxxx**	**RSKI-130-xxxxx**	RSCI-400-00625	RSTI-03X-30038	RSRY-708-00187	5

*xxxxx = Indicate to 2 metric decimal places the size to be burnished (e.g. long series roller burnisher Ø 14.00mm with MT.1 shank: RSKI-230-01400).
**x = A number that will vary from 2 to 8 depending upon the exact diameter to be burnished. See page D: 6 for the correct identification of the "x" value.
NOTE: Each roller burnishing tool comes assembled complete with cage, cone, and rolls.

D: 42 - 45
Key on D: 1
D: 40 - 41
D: 39

A DRILLING
B BORING
C REAMING
D BURNISHING
E THREADING
X SPECIALS

Roller Burnishing Tools | Through Holes

K Series | Diameter Range: 0.6535" - 0.9740" (16.60mm - 24.74mm)

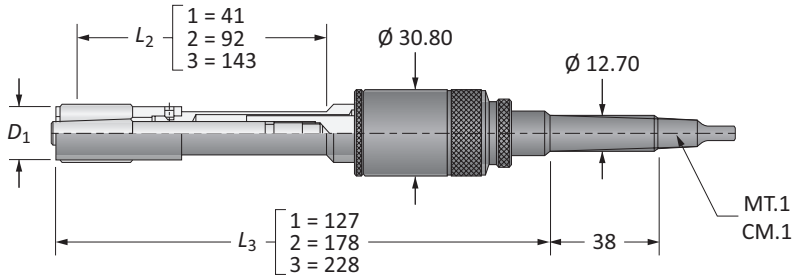

D_1			Part No.		Spare Parts			
Imperial (in)	Metric (mm)	*L*	Assembly with Morse Taper Shank	Assembly with Straight Shank	Cage	Cone	Rolls	Qty Rolls
0.6535 - 0.6933	16.60 - 17.61	1	**RDKK-210-01660**	**RDKK-110-01660**	RDCK-011-00042	RDTK-031-00042	RDRY-701-00187	5
0.6535 - 0.6933	16.60 - 17.61	2	**RDKK-220-01660**	**RDKK-120-01660**	RDCK-011-00042	RDTK-031-00042	RDRY-701-00187	5
0.6535 - 0.6933	16.60 - 17.61	3	**RDKK-230-01660**	**RDKK-130-01660**	RDCK-011-00042	RDTK-031-00042	RDRY-701-00187	5
0.6850 - 0.7240	17.40 - 18.39	1	**RDKK-210-01740**	**RDKK-110-01740**	RDCK-011-00044	RDTK-031-00044	RDRY-701-00187	5
0.6850 - 0.7240	17.40 - 18.39	2	**RDKK-220-01740**	**RDKK-120-01740**	RDCK-011-00044	RDTK-031-00044	RDRY-701-00187	5
0.6850 - 0.7240	17.40 - 18.39	3	**RDKK-230-01740**	**RDKK-130-01740**	RDCK-011-00044	RDTK-031-00044	RDRY-701-00187	5
0.7161 - 0.7551	18.19 - 19.18	1	**RDKK-210-01819**	**RDKK-110-01819**	RDCK-011-00046	RDTK-031-00042	RDRY-701-00218	5
0.7161 - 0.7551	18.19 - 19.18	2	**RDKK-220-01819**	**RDKK-120-01819**	RDCK-011-00046	RDTK-031-00042	RDRY-701-00218	5
0.7161 - 0.7551	18.19 - 19.18	3	**RDKK-230-01819**	**RDKK-130-01819**	RDCK-011-00046	RDTK-031-00042	RDRY-701-00218	5
0.7465 - 0.7870	18.96 - 19.99	1	**RDKK-210-01896**	**RDKK-110-01896**	RDCK-011-00048	RDTK-031-00044	RDRY-701-00218	5
0.7465 - 0.7870	18.96 - 19.99	2	**RDKK-220-01896**	**RDKK-120-01896**	RDCK-011-00048	RDTK-031-00044	RDRY-701-00218	5
0.7465 - 0.7870	18.96 - 19.99	3	**RDKK-230-01896**	**RDKK-130-01896**	RDCK-011-00048	RDTK-031-00044	RDRY-701-00218	5
0.7772 - 0.8177	19.74 - 20.77	1	**RDKK-210-01974**	**RDKK-110-01974**	RDCK-011-00050	RDTK-031-00050	RDRY-701-00218	5
0.7772 - 0.8177	19.74 - 20.77	2	**RDKK-220-01974**	**RDKK-120-01974**	RDCK-011-00050	RDTK-031-00050	RDRY-701-00218	5
0.7772 - 0.8177	19.74 - 20.77	3	**RDKK-230-01974**	**RDKK-130-01974**	RDCK-011-00050	RDTK-031-00050	RDRY-701-00218	5
0.8079 - 0.8492	20.52 - 21.57	1	**RDKK-210-02052**	**RDKK-110-02052**	RDCK-011-00052	RDTK-031-00052	RDRY-701-00218	5
0.8079 - 0.8492	20.52 - 21.57	2	**RDKK-220-02052**	**RDKK-120-02052**	RDCK-011-00052	RDTK-031-00052	RDRY-701-00218	5
0.8079 - 0.8492	20.52 - 21.57	3	**RDKK-230-02052**	**RDKK-130-02052**	RDCK-011-00052	RDTK-031-00052	RDRY-701-00218	5
0.8390 - 0.8799	21.31 - 22.35	1	**RDKK-210-02131**	**RDKK-110-02131**	RDCK-011-00054	RDTK-031-00054	RDRY-701-00218	5
0.8390 - 0.8799	21.31 - 22.35	2	**RDKK-220-02131**	**RDKK-120-02131**	RDCK-011-00054	RDTK-031-00054	RDRY-701-00218	5
0.8390 - 0.8799	21.31 - 22.35	3	**RDKK-230-02131**	**RDKK-130-02131**	RDCK-011-00054	RDTK-031-00054	RDRY-701-00218	5
0.8713 - 0.9118	22.13 - 23.16	1	**RDKK-210-02213**	**RDKK-110-02213**	RDCK-011-00056	RDTK-031-00050	RDRY-701-00265	5
0.8713 - 0.9118	22.13 - 23.16	2	**RDKK-220-02213**	**RDKK-120-02213**	RDCK-011-00056	RDTK-031-00050	RDRY-701-00265	5
0.8713 - 0.9118	22.13 - 23.16	3	**RDKK-230-02213**	**RDKK-130-02213**	RDCK-011-00056	RDTK-031-00050	RDRY-701-00265	5
0.9020 - 0.9433	22.91 - 23.96	1	**RDKK-210-02291**	**RDKK-110-02291**	RDCK-011-00058	RDTK-031-00052	RDRY-701-00265	5
0.9020 - 0.9433	22.91 - 23.96	2	**RDKK-220-02291**	**RDKK-120-02291**	RDCK-011-00058	RDTK-031-00052	RDRY-701-00265	5
0.9020 - 0.9433	22.91 - 23.96	3	**RDKK-230-02291**	**RDKK-130-02291**	RDCK-011-00058	RDTK-031-00052	RDRY-701-00265	5
0.9331 - 0.9740	23.70 - 24.74	1	**RDKK-210-02370**	**RDKK-110-02370**	RDCK-011-00060	RDTK-031-00054	RDRY-701-00265	5
0.9331 - 0.9740	23.70 - 24.74	2	**RDKK-220-02370**	**RDKK-120-02370**	RDCK-011-00060	RDTK-031-00054	RDRY-701-00265	5
0.9331 - 0.9740	23.70 - 24.74	3	**RDKK-230-02370**	**RDKK-130-02370**	RDCK-011-00060	RDTK-031-00054	RDRY-701-00265	5

NOTE: Each roller burnishing tool comes assembled complete with cage, cone, and rolls.

D: 42 - 45 D: 40 - 41 D: 38

Key on D: 1

Roller Burnishing Tools | Blind Holes

K Series | Diameter Range: 0.6535" - 0.9740" (16.60mm - 24.74mm)

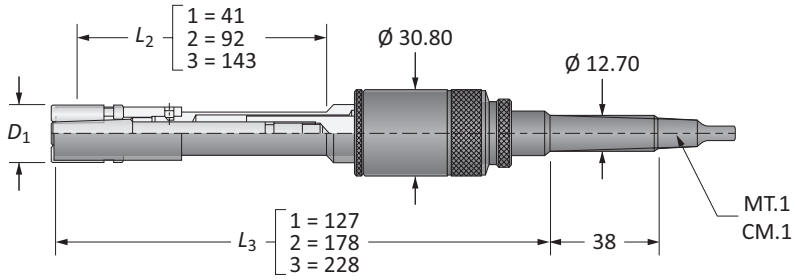

D_1			Part No.*		Spare Parts			
Imperial (in)	Metric (mm)	*L*	Assembly with Morse Taper Shank	Assembly with Straight Shank	Cage	Cone**	Rolls	Qty Rolls
0.6535 - 0.6933	16.60 - 17.61	1	**RSKK-210-xxxxx**	**RSKK-110-xxxxx**	RSCK-015-00042	RSTK-03x-00042	RSRY-708-00187	5
0.6535 - 0.6933	16.60 - 17.61	2	**RSKK-220-xxxxx**	**RSKK-120-xxxxx**	RSCK-015-00042	RSTK-03x-00042	RSRY-708-00187	5
0.6535 - 0.6933	16.60 - 17.61	3	**RSKK-230-xxxxx**	**RSKK-130-xxxxx**	RSCK-015-00042	RSTK-03x-00042	RSRY-708-00187	5
0.6850 - 0.7240	17.40 - 18.39	1	**RSKK-210-xxxxx**	**RSKK-110-xxxxx**	RSCK-015-00044	RSTK-03x-00044	RSRY-708-00187	5
0.6850 - 0.7240	17.40 - 18.39	2	**RSKK-220-xxxxx**	**RSKK-120-xxxxx**	RSCK-015-00044	RSTK-03x-00044	RSRY-708-00187	5
0.6850 - 0.7240	17.40 - 18.39	3	**RSKK-230-xxxxx**	**RSKK-130-xxxxx**	RSCK-015-00044	RSTK-03x-00044	RSRY-708-00187	5
0.7161 - 0.7551	18.19 - 19.18	1	**RSKK-210-xxxxx**	**RSKK-110-xxxxx**	RSCK-015-00046	RSTK-03x-00042	RSRY-708-00218	5
0.7161 - 0.7551	18.19 - 19.18	2	**RSKK-220-xxxxx**	**RSKK-120-xxxxx**	RSCK-015-00046	RSTK-03x-00042	RSRY-708-00218	5
0.7161 - 0.7551	18.19 - 19.18	3	**RSKK-230-xxxxx**	**RSKK-130-xxxxx**	RSCK-015-00046	RSTK-03x-00042	RSRY-708-00218	5
0.7465 - 0.7870	18.96 - 19.99	1	**RSKK-210-xxxxx**	**RSKK-110-xxxxx**	RSCK-015-00048	RSTK-03x-00044	RSRY-708-00218	5
0.7465 - 0.7870	18.96 - 19.99	2	**RSKK-220-xxxxx**	**RSKK-120-xxxxx**	RSCK-015-00048	RSTK-03x-00044	RSRY-708-00218	5
0.7465 - 0.7870	18.96 - 19.99	3	**RSKK-230-xxxxx**	**RSKK-130-xxxxx**	RSCK-015-00048	RSTK-03x-00044	RSRY-708-00218	5
0.7772 - 0.8177	19.74 - 20.77	1	**RSKK-210-xxxxx**	**RSKK-110-xxxxx**	RSCK-015-00050	RSTK-03x-00050	RSRY-708-00218	5
0.7772 - 0.8177	19.74 - 20.77	2	**RSKK-220-xxxxx**	**RSKK-120-xxxxx**	RSCK-015-00050	RSTK-03x-00050	RSRY-708-00218	5
0.7772 - 0.8177	19.74 - 20.77	3	**RSKK-230-xxxxx**	**RSKK-130-xxxxx**	RSCK-015-00050	RSTK-03x-00050	RSRY-708-00218	5
0.8079 - 0.8492	20.52 - 21.57	1	**RSKK-210-xxxxx**	**RSKK-110-xxxxx**	RSCK-015-00052	RSTK-03x-00052	RSRY-708-00218	5
0.8079 - 0.8492	20.52 - 21.57	2	**RSKK-220-xxxxx**	**RSKK-120-xxxxx**	RSCK-015-00052	RSTK-03x-00052	RSRY-708-00218	5
0.8079 - 0.8492	20.52 - 21.57	3	**RSKK-230-xxxxx**	**RSKK-130-xxxxx**	RSCK-015-00052	RSTK-03x-00052	RSRY-708-00218	5
0.8390 - 0.8799	21.31 - 22.35	1	**RSKK-210-xxxxx**	**RSKK-110-xxxxx**	RSCK-015-00054	RSTK-03x-00054	RSRY-708-00218	5
0.8390 - 0.8799	21.31 - 22.35	2	**RSKK-220-xxxxx**	**RSKK-120-xxxxx**	RSCK-015-00054	RSTK-03x-00054	RSRY-708-00218	5
0.8390 - 0.8799	21.31 - 22.35	3	**RSKK-230-xxxxx**	**RSKK-130-xxxxx**	RSCK-015-00054	RSTK-03x-00054	RSRY-708-00218	5
0.8713 - 0.9118	22.13 - 23.16	1	**RSKK-210-xxxxx**	**RSKK-110-xxxxx**	RSCK-015-00056	RSTK-03x-00050	RSRY-708-00265	5
0.8713 - 0.9118	22.13 - 23.16	2	**RSKK-220-xxxxx**	**RSKK-120-xxxxx**	RSCK-015-00056	RSTK-03x-00050	RSRY-708-00265	5
0.8713 - 0.9118	22.13 - 23.16	3	**RSKK-230-xxxxx**	**RSKK-130-xxxxx**	RSCK-015-00056	RSTK-03x-00050	RSRY-708-00265	5
0.9020 - 0.9433	22.91 - 23.96	1	**RSKK-210-xxxxx**	**RSKK-110-xxxxx**	RSCK-015-00058	RSTK-03x-00052	RSRY-708-00265	5
0.9020 - 0.9433	22.91 - 23.96	2	**RSKK-220-xxxxx**	**RSKK-120-xxxxx**	RSCK-015-00058	RSTK-03x-00052	RSRY-708-00265	5
0.9020 - 0.9433	22.91 - 23.96	3	**RSKK-230-xxxxx**	**RSKK-130-xxxxx**	RSCK-015-00058	RSTK-03x-00052	RSRY-708-00265	5
0.9331 - 0.9740	23.70 - 24.74	1	**RSKK-210-xxxxx**	**RSKK-110-xxxxx**	RSCK-015-00060	RSTK-03x-00054	RSRY-708-00265	5
0.9331 - 0.9740	23.70 - 24.74	2	**RSKK-220-xxxxx**	**RSKK-120-xxxxx**	RSCK-015-00060	RSTK-03x-00054	RSRY-708-00265	5
0.9331 - 0.9740	23.70 - 24.74	3	**RSKK-230-xxxxx**	**RSKK-130-xxxxx**	RSCK-015-00060	RSTK-03x-00054	RSRY-708-00265	5

*xxxxx = Indicate to 2 metric decimal places the size to be burnished (e.g. standard series roller burnisher Ø 20.00mm with MT.1 shank: RSKK-120-02000).
**x = A number that will vary from 2 to 8 depending upon the exact diameter to be burnished. See page D: 6 for the correct identification of the "x" value.
NOTE: Each roller burnishing tool comes assembled complete with cage, cone, and rolls.

D: 42 - 45 | D: 40 - 41 | D: 39

Key on D: 1

Roller Burnishing Tools | Through Holes

L Series | Diameter Range: 0.9661" - 1.2268" (24.54mm - 31.16mm)

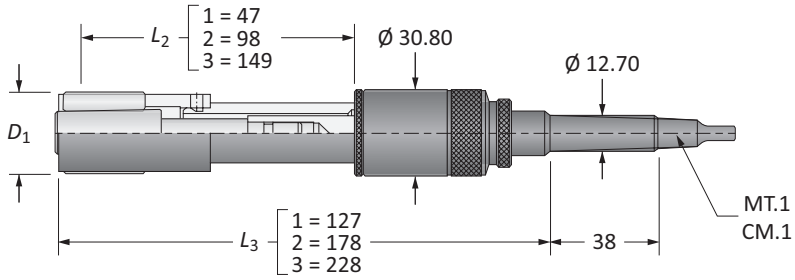

D_1			Part No.		Spare Parts			
Imperial (in)	Metric (mm)	*L*	Assembly with Morse Taper Shank	Assembly with Straight Shank	Cage	Cone	Rolls	Qty Rolls
0.9661 - 1.0075	24.54 - 25.59	1	**RDKL-210-02454**	**RDKL-110-02454**	RDCL-011-00062	RDTL-031-00062	RDRY-701-00265	5
0.9661 - 1.0075	24.54 - 25.59	2	**RDKL-220-02454**	**RDKL-120-02454**	RDCL-011-00062	RDTL-031-00062	RDRY-701-00265	5
0.9661 - 1.0075	24.54 - 25.59	3	**RDKL-230-02454**	**RDKL-130-02454**	RDCL-011-00062	RDTL-031-00062	RDRY-701-00265	5
0.9992 - 1.0402	25.38 - 26.42	1	**RDKL-210-02538**	**RDKL-110-02538**	RDCL-011-00064	RDTL-031-00064	RDRY-701-00265	7
0.9992 - 1.0402	25.38 - 26.42	2	**RDKL-220-02538**	**RDKL-120-02538**	RDCL-011-00064	RDTL-031-00064	RDRY-701-00265	7
0.9992 - 1.0402	25.38 - 26.42	3	**RDKL-230-02538**	**RDKL-130-02538**	RDCL-011-00064	RDTL-031-00064	RDRY-701-00265	7
1.0299 - 1.0709	26.16 - 27.20	1	**RDKL-210-02616**	**RDKL-110-02616**	RDCL-011-00066	RDTL-031-00066	RDRY-701-00265	7
1.0299 - 1.0709	26.16 - 27.20	2	**RDKL-220-02616**	**RDKL-120-02616**	RDCL-011-00066	RDTL-031-00066	RDRY-701-00265	7
1.0299 - 1.0709	26.16 - 27.20	3	**RDKL-230-02616**	**RDKL-130-02616**	RDCL-011-00066	RDTL-031-00066	RDRY-701-00265	7
1.0610 - 1.1024	26.95 - 28.00	1	**RDKL-210-02695**	**RDKL-110-02695**	RDCL-011-00068	RDTL-031-00068	RDRY-701-00265	7
1.0610 - 1.1024	26.95 - 28.00	2	**RDKL-220-02695**	**RDKL-120-02695**	RDCL-011-00068	RDTL-031-00068	RDRY-701-00265	7
1.0610 - 1.1024	26.95 - 28.00	3	**RDKL-230-02695**	**RDKL-130-02695**	RDCL-011-00068	RDTL-031-00068	RDRY-701-00265	7
1.0917 - 1.1327	27.73 - 28.77	1	**RDKL-210-02773**	**RDKL-110-02773**	RDCL-011-00070	RDTL-031-00070	RDRY-701-00265	7
1.0917 - 1.1327	27.73 - 28.77	2	**RDKL-220-02773**	**RDKL-120-02773**	RDCL-011-00070	RDTL-031-00070	RDRY-701-00265	7
1.0917 - 1.1327	27.73 - 28.77	3	**RDKL-230-02773**	**RDKL-130-02773**	RDCL-011-00070	RDTL-031-00070	RDRY-701-00265	7
1.1240 - 1.1650	28.55 - 29.59	1	**RDKL-210-02855**	**RDKL-110-02855**	RDCL-011-00072	RDTL-031-00066	RDRY-701-00312	7
1.1240 - 1.1650	28.55 - 29.59	2	**RDKL-220-02855**	**RDKL-120-02855**	RDCL-011-00072	RDTL-031-00066	RDRY-701-00312	7
1.1240 - 1.1650	28.55 - 29.59	3	**RDKL-230-02855**	**RDKL-130-02855**	RDCL-011-00072	RDTL-031-00066	RDRY-701-00312	7
1.1551 - 1.1965	29.34 - 30.39	1	**RDKL-210-02934**	**RDKL-110-02934**	RDCL-011-00074	RDTL-031-00068	RDRY-701-00312	7
1.1551 - 1.1965	29.34 - 30.39	2	**RDKL-220-02934**	**RDKL-120-02934**	RDCL-011-00074	RDTL-031-00068	RDRY-701-00312	7
1.1551 - 1.1965	29.34 - 30.39	3	**RDKL-230-02934**	**RDKL-130-02934**	RDCL-011-00074	RDTL-031-00068	RDRY-701-00312	7
1.1858 - 1.2268	30.12 - 31.16	1	**RDKL-210-03012**	**RDKL-110-03012**	RDCL-011-00076	RDTL-031-00070	RDRY-701-00312	7
1.1858 - 1.2268	30.12 - 31.16	2	**RDKL-220-03012**	**RDKL-120-03012**	RDCL-011-00076	RDTL-031-00070	RDRY-701-00312	7
1.1858 - 1.2268	30.12 - 31.16	3	**RDKL-230-03012**	**RDKL-130-03012**	RDCL-011-00076	RDTL-031-00070	RDRY-701-00312	7

NOTE: Each roller burnishing tool comes assembled complete with cage, cone, and rolls.

D: 42 - 45

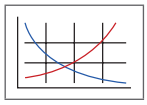

Key on D: 1

D: 40 - 41

D: 38

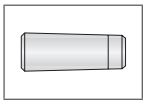

Roller Burnishing Tools | Blind Holes

L Series | Diameter Range: 0.9661" - 1.2268" (24.54mm - 31.16mm)

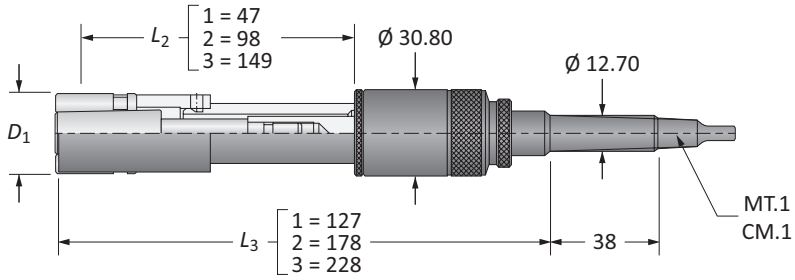

D_1			Part No.*		Spare Parts			
Imperial (in)	Metric (mm)	*L*	Assembly with Morse Taper Shank	Assembly with Straight Shank	Cage	Cone**	Rolls	Qty Rolls
0.9661 - 1.0075	24.54 - 25.59	1	**RSKL-210-xxxxx**	**RSKL-110-xxxxx**	RSCL-015-00062	RSTL-03x-00062	RSRY-708-00265	5
0.9661 - 1.0075	24.54 - 25.59	2	**RSKL-220-xxxxx**	**RSKL-120-xxxxx**	RSCL-015-00062	RSTL-03x-00062	RSRY-708-00265	5
0.9661 - 1.0075	24.54 - 25.59	3	**RSKL-230-xxxxx**	**RSKL-130-xxxxx**	RSCL-015-00062	RSTL-03x-00062	RSRY-708-00265	5
0.9992 - 1.0402	25.38 - 26.42	1	**RSKL-210-xxxxx**	**RSKL-110-xxxxx**	RSCL-015-00064	RSTL-03x-00064	RSRY-708-00265	5
0.9992 - 1.0402	25.38 - 26.42	2	**RSKL-220-xxxxx**	**RSKL-120-xxxxx**	RSCL-015-00064	RSTL-03x-00064	RSRY-708-00265	5
0.9992 - 1.0402	25.38 - 26.42	3	**RSKL-230-xxxxx**	**RSKL-130-xxxxx**	RSCL-015-00064	RSTL-03x-00064	RSRY-708-00265	5
1.0299 - 1.0709	26.16 - 27.20	1	**RSKL-210-xxxxx**	**RSKL-110-xxxxx**	RSCL-015-00066	RSTL-03x-00066	RSRY-708-00265	5
1.0299 - 1.0709	26.16 - 27.20	2	**RSKL-220-xxxxx**	**RSKL-120-xxxxx**	RSCL-015-00066	RSTL-03x-00066	RSRY-708-00265	5
1.0299 - 1.0709	26.16 - 27.20	3	**RSKL-230-xxxxx**	**RSKL-130-xxxxx**	RSCL-015-00066	RSTL-03x-00066	RSRY-708-00265	5
1.0610 - 1.1024	26.95 - 28.00	1	**RSKL-210-xxxxx**	**RSKL-110-xxxxx**	RSCL-015-00068	RSTL-03x-00068	RSRY-708-00265	5
1.0610 - 1.1024	26.95 - 28.00	2	**RSKL-220-xxxxx**	**RSKL-120-xxxxx**	RSCL-015-00068	RSTL-03x-00068	RSRY-708-00265	5
1.0610 - 1.1024	26.95 - 28.00	3	**RSKL-230-xxxxx**	**RSKL-130-xxxxx**	RSCL-015-00068	RSTL-03x-00068	RSRY-708-00265	5
1.0917 - 1.1327	27.73 - 28.77	1	**RSKL-210-xxxxx**	**RSKL-110-xxxxx**	RSCL-015-00070	RSTL-03x-00070	RSRY-708-00265	5
1.0917 - 1.1327	27.73 - 28.77	2	**RSKL-220-xxxxx**	**RSKL-120-xxxxx**	RSCL-015-00070	RSTL-03x-00070	RSRY-708-00265	5
1.0917 - 1.1327	27.73 - 28.77	3	**RSKL-230-xxxxx**	**RSKL-130-xxxxx**	RSCL-015-00070	RSTL-03x-00070	RSRY-708-00265	5
1.1240 - 1.1650	28.55 - 29.59	1	**RSKL-210-xxxxx**	**RSKL-110-xxxxx**	RSCL-015-00072	RSTL-03x-00066	RSRY-708-00312	5
1.1240 - 1.1650	28.55 - 29.59	2	**RSKL-220-xxxxx**	**RSKL-120-xxxxx**	RSCL-015-00072	RSTL-03x-00066	RSRY-708-00312	5
1.1240 - 1.1650	28.55 - 29.59	3	**RSKL-230-xxxxx**	**RSKL-130-xxxxx**	RSCL-015-00072	RSTL-03x-00066	RSRY-708-00312	5
1.1551 - 1.1965	29.34 - 30.39	1	**RSKL-210-xxxxx**	**RSKL-110-xxxxx**	RSCL-015-00074	RSTL-03x-00068	RSRY-708-00312	5
1.1551 - 1.1965	29.34 - 30.39	2	**RSKL-220-xxxxx**	**RSKL-120-xxxxx**	RSCL-015-00074	RSTL-03x-00068	RSRY-708-00312	5
1.1551 - 1.1965	29.34 - 30.39	3	**RSKL-230-xxxxx**	**RSKL-130-xxxxx**	RSCL-015-00074	RSTL-03x-00068	RSRY-708-00312	5
1.1858 - 1.2268	30.12 - 31.16	1	**RSKL-210-xxxxx**	**RSKL-110-xxxxx**	RSCL-015-00076	RSTL-03x-00070	RSRY-708-00312	5
1.1858 - 1.2268	30.12 - 31.16	2	**RSKL-220-xxxxx**	**RSKL-120-xxxxx**	RSCL-015-00076	RSTL-03x-00070	RSRY-708-00312	5
1.1858 - 1.2268	30.12 - 31.16	3	**RSKL-230-xxxxx**	**RSKL-130-xxxxx**	RSCL-015-00076	RSTL-03x-00070	RSRY-708-00312	5

*xxxxx = Indicate to 2 metric decimal places the size to be burnished (e.g. short series roller burnisher Ø 27.50mm with MT.1 shank: RSKL-210-02750).
**x = A number that will vary from 2 to 8 depending upon the exact diameter to be burnished. See page D: 6 for the correct identification of the "x" value.
NOTE: Each roller burnishing tool comes assembled complete with cage, cone, and rolls.

D: 42 - 45 | D: 40 - 41 | D: 39

Key on D: 1

A DRILLING
B BORING
C REAMING
D BURNISHING
E THREADING
X SPECIALS

Roller Burnishing Tools | Through Holes

F Series | Diameter Range: 0.9661" - 1.2268" (24.54mm - 31.16mm)

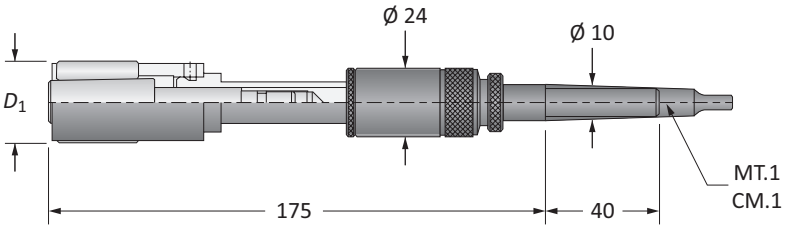

D_1		Part No.		Spare Parts			
Imperial (in)	Metric (mm)	Assembly with Morse Taper Shank	Assembly with Straight Shank	Cage	Cone	Rolls	Qty Rolls
0.9661 - 1.0075	24.54 - 25.59	**RDKF-200-02454**	**RDKF-100-02454**	RDCL-011-00062	RDTF-031-00062	RDRY-701-00265	5
0.9992 - 1.0402	25.38 - 26.42	**RDKF-200-02538**	**RDKF-100-02538**	RDCL-011-00064	RDTF-031-00064	RDRY-701-00265	7
1.0299 - 1.0709	26.16 - 27.20	**RDKF-200-02616**	**RDKF-100-02616**	RDCL-011-00066	RDTF-031-00066	RDRY-701-00265	7
1.0610 - 1.1024	26.95 - 28.00	**RDKF-200-02695**	**RDKF-100-02695**	RDCL-011-00068	RDTF-031-00068	RDRY-701-00265	7
1.0917 - 1.1327	27.73 - 28.77	**RDKF-200-02773**	**RDKF-100-02773**	RDCL-011-00070	RDTF-031-00070	RDRY-701-00265	7
1.1240 - 1.1650	28.55 - 29.59	**RDKF-200-02855**	**RDKF-100-02855**	RDCL-011-00072	RDTF-031-00066	RDRY-701-00312	7
1.1551 - 1.1965	29.34 - 30.39	**RDKF-200-02934**	**RDKF-100-02934**	RDCL-011-00074	RDTF-031-00068	RDRY-701-00312	7
1.1858 - 1.2268	30.12 - 31.16	**RDKF-200-03012**	**RDKF-100-03012**	RDCL-011-00076	RDTF-031-00070	RDRY-701-00312	7

NOTE: Each roller burnishing tool comes assembled complete with cage, cone, and rolls.

D: 42 - 45 | D: 40 - 41 | D: 38

Key on D: 1

Roller Burnishing Tools | Blind Holes

F Series | Diameter Range: 0.9661" - 1.2268" (24.54mm - 31.16mm)

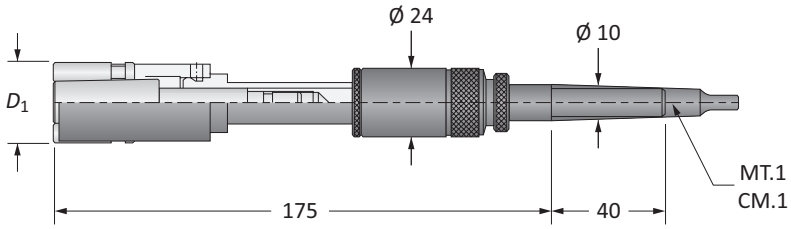

D_1		Part No.*		Spare Parts			
Imperial (in)	Metric (mm)	Assembly with Morse Taper Shank	Assembly with Straight Shank	Cage	Cone**	Rolls	Qty Rolls
0.9661 - 1.0075	24.54 - 25.59	**RSKF-200-xxxxx**	**RSKF-100-xxxxx**	RSCL-015-00062	RSTF-03x-00062	RSRY-708-00265	5
0.9992 - 1.0402	25.38 - 26.42	**RSKF-200-xxxxx**	**RSKF-100-xxxxx**	RSCL-015-00064	RSTF-03x-00064	RSRY-708-00265	5
1.0299 - 1.0709	26.16 - 27.20	**RSKF-200-xxxxx**	**RSKF-100-xxxxx**	RSCL-015-00066	RSTF-03x-00066	RSRY-708-00265	5
1.0610 - 1.1024	26.95 - 28.00	**RSKF-200-xxxxx**	**RSKF-100-xxxxx**	RSCL-015-00068	RSTF-03x-00068	RSRY-708-00265	5
1.0917 - 1.1327	27.73 - 28.77	**RSKF-200-xxxxx**	**RSKF-100-xxxxx**	RSCL-015-00070	RSTF-03x-00070	RSRY-708-00265	5
1.1240 - 1.1650	28.55 - 29.59	**RSKF-200-xxxxx**	**RSKF-100-xxxxx**	RSCL-015-00072	RSTF-03x-00066	RSRY-708-00312	5
1.1551 - 1.1965	29.34 - 30.39	**RSKF-200-xxxxx**	**RSKF-100-xxxxx**	RSCL-015-00074	RSTF-03x-00068	RSRY-708-00312	5
1.1858 - 1.2268	30.12 - 31.16	**RSKF-200-xxxxx**	**RSKF-100-xxxxx**	RSCL-015-00076	RSTF-03x-00070	RSRY-708-00312	5

*xxxxx = Indicate to 2 metric decimal places the size to be burnished (e.g. roller burnisher Ø 27.00mm with MT.1 shank: RSKF-200-02700).
**x = A number that will vary from 2 to 8 depending upon the exact diameter to be burnished. See page D: 6 for the correct identification of the "x" value.
NOTE: Each roller burnishing tool comes assembled complete with cage, cone, and rolls.

D: 42 - 45 | D: 40 - 41 | D: 39

Key on D: 1

Roller Burnishing Tools | Through Holes

M Series | Diameter Range: 1.2146" - 1.4118" (30.85mm - 35.86mm)

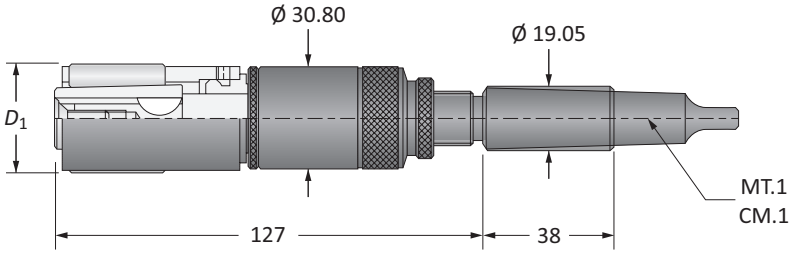

D_1		Part No.		Spare Parts			
Imperial (in)	Metric (mm)	Assembly with Morse Taper Shank	Assembly with Straight Shank	Cage	Cone	Rolls	Qty Rolls
1.2146 - 1.2559	30.85 - 31.90	**RDKM-200-03085**	**RDKM-100-03085**	RDCM-011-00078	RDTM-031-00078	RDRY-701-00265	7
1.2469 - 1.2878	31.67 - 32.71	**RDKM-200-03167**	**RDKM-100-03167**	RDCM-011-00080	RDTM-031-00080	RDRY-701-00265	7
1.2772 - 1.3177	32.44 - 33.47	**RDKM-200-03244**	**RDKM-100-03244**	RDCM-011-00082	RDTM-031-00082	RDRY-701-00265	7
1.3087 - 1.3500	33.24 - 34.29	**RDKM-200-03324**	**RDKM-100-03324**	RDCM-011-00084	RDTM-031-00078	RDRY-701-00312	7
1.3406 - 1.3815	34.05 - 35.09	**RDKM-200-03405**	**RDKM-100-03405**	RDCM-011-00086	RDTM-031-00080	RDRY-701-00312	7
1.3713 - 1.4118	34.83 - 35.86	**RDKM-200-03483**	**RDKM-100-03483**	RDCM-011-00088	RDTM-031-00082	RDRY-701-00312	7

NOTE: Each roller burnishing tool comes assembled complete with cage, cone, and rolls.

D: 42 - 45

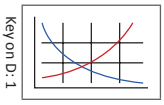

D: 40 - 41

D: 38

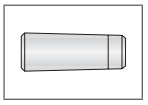

Roller Burnishing Tools | Blind Holes

M Series | Diameter Range: 1.2146" - 1.4118" (30.85mm - 35.86mm)

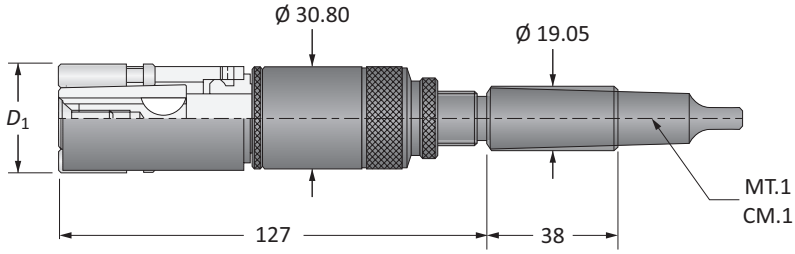

D_1		Part No.*		Spare Parts			
Imperial (in)	Metric (mm)	Assembly with Morse Taper Shank	Assembly with Straight Shank	Cage	Cone**	Rolls	Qty Rolls
1.2146 - 1.2559	30.85 - 31.90	**RSKM-200-xxxxx**	**RSKM-100-xxxxx**	RSCM-015-00078	RSTM-03x-00078	RSRY-708-00265	5
1.2469 - 1.2878	31.67 - 32.71	**RSKM-200-xxxxx**	**RSKM-100-xxxxx**	RSCM-015-00080	RSTM-03x-00080	RSRY-708-00265	5
1.2772 - 1.3177	32.44 - 33.47	**RSKM-200-xxxxx**	**RSKM-100-xxxxx**	RSCM-015-00082	RSTM-03x-00082	RSRY-708-00265	5
1.3087 - 1.3500	33.24 - 34.29	**RSKM-200-xxxxx**	**RSKM-100-xxxxx**	RSCM-015-00084	RSTM-03x-00078	RSRY-708-00312	5
1.3406 - 1.3815	34.05 - 35.09	**RSKM-200-xxxxx**	**RSKM-100-xxxxx**	RSCM-015-00086	RSTM-03x-00080	RSRY-708-00312	5
1.3713 - 1.4118	34.83 - 35.86	**RSKM-200-xxxxx**	**RSKM-100-xxxxx**	RSCM-015-00088	RSTM-03x-00082	RSRY-708-00312	5

*xxxxx = Indicate to 2 metric decimal places the size to be burnished (e.g. roller burnisher Ø 35.00mm with MT.2 shank: RSKM-200-03500).
**x = A number that will vary from 2 to 8 depending upon the exact diameter to be burnished. See page D: 6 for the correct identification of the "x" value.
NOTE: Each roller burnishing tool comes assembled complete with cage, cone, and rolls.

D: 42 - 45
Key on D: 1
D: 40 - 41
D: 39

A DRILLING
B BORING
C REAMING
D BURNISHING
E THREADING
X SPECIALS

Roller Burnishing Tools | Through Holes

N Series | Diameter Range: 1.4020" - 1.8492" (35.61mm - 46.97mm)

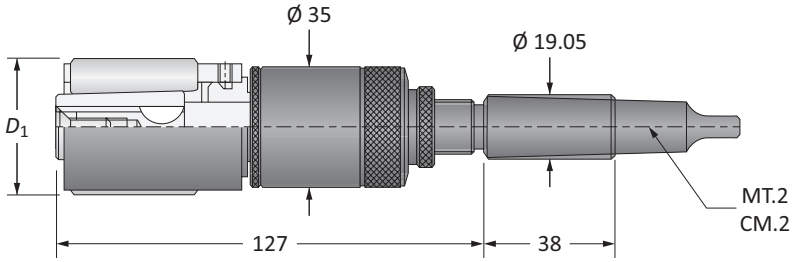

D_1		Part No.		Spare Parts			
Imperial (in)	Metric (mm)	Assembly with Morse Taper Shank	Assembly with Straight Shank	Cage	Cone	Rolls	Qty Rolls
1.4020 - 1.4433	35.61 - 36.66	**RDKN-200-03561**	**RDKN-100-03561**	RDCN-011-00090	RDTN-031-00090	RDRY-701-00312	7
1.4331 - 1.4740	36.40 - 37.44	**RDKN-200-03640**	**RDKN-100-03640**	RDCN-011-00092	RDTN-031-00092	RDRY-701-00312	7
1.4638 - 1.5051	37.18 - 38.23	**RDKN-200-03718**	**RDKN-100-03718**	RDCN-011-00094	RDTN-031-00094	RDRY-701-00312	7
1.4961 - 1.5370	38.00 - 39.04	**RDKN-200-03800**	**RDKN-100-03800**	RDCN-011-00096	RDTN-031-00096	RDRY-701-00312	7
1.5272 - 1.5677	38.79 - 39.82	**RDKN-200-03879**	**RDKN-100-03879**	RDCN-011-00098	RDTM-031-00080	RDRY-701-00406	7
1.5579 - 1.5992	39.57 - 40.62	**RDKN-200-03957**	**RDKN-100-03957**	RDCN-011-00100	RDTM-031-00082	RDRY-701-00406	7
1.5890 - 1.6299	40.36 - 41.40	**RDKN-200-04036**	**RDKN-100-04036**	RDCN-011-00102	RDTN-031-00090	RDRY-701-00406	7
1.6213 - 1.6618	41.18 - 42.21	**RDKN-200-04118**	**RDKN-100-04118**	RDCN-011-00104	RDTN-031-00092	RDRY-701-00406	7
1.6520 - 1.6933	41.96 - 43.01	**RDKN-200-04196**	**RDKN-100-04196**	RDCN-011-00106	RDTN-031-00094	RDRY-701-00406	7
1.6831 - 1.7240	42.75 - 43.79	**RDKN-200-04275**	**RDKN-100-04275**	RDCN-011-00108	RDTM-031-00082	RDRY-701-00468	7
1.7138 - 1.7551	43.53 - 44.58	**RDKN-200-04353**	**RDKN-100-04353**	RDCN-011-00110	RDTN-031-00090	RDRY-701-00468	7
1.7461 - 1.7870	44.35 - 45.39	**RDKN-200-04435**	**RDKN-100-04435**	RDCN-011-00112	RDTN-031-00092	RDRY-701-00468	7
1.7772 - 1.8177	45.14 - 46.17	**RDKN-200-04514**	**RDKN-100-04514**	RDCN-011-00114	RDTN-031-00094	RDRY-701-00468	7
1.8079 - 1.8492	45.92 - 46.97	**RDKN-200-04592**	**RDKN-100-04592**	RDCN-011-00116	RDTN-031-00096	RDRY-701-00468	7

NOTE: Each roller burnishing tool comes assembled complete with cage, cone, and rolls.

D: 42 - 45 | D: 40 - 41 | D: 38

Key on D: 1

Roller Burnishing Tools | Blind Holes

N Series | Diameter Range: 1.4020" - 1.8492" (35.61mm - 46.97mm)

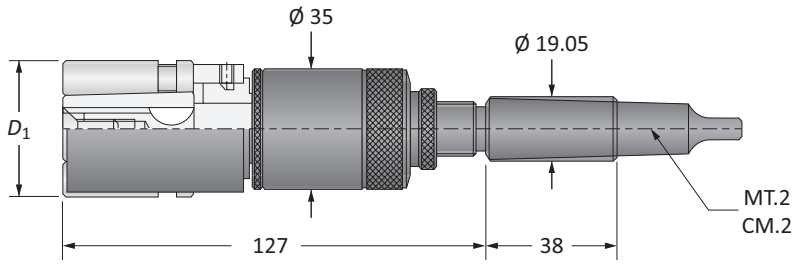

D_1		Part No.*		Spare Parts			
Imperial (in)	Metric (mm)	Assembly with Morse Taper Shank	Assembly with Straight Shank	Cage	Cone**	Rolls	Qty Rolls
1.4020 - 1.4433	35.61 - 36.66	**RSKN-200-xxxxx**	**RSKN-100-xxxxx**	RSCN-015-00090	RSTN-03x-00090	RSRY-708-00312	5
1.4331 - 1.4740	36.40 - 37.44	**RSKN-200-xxxxx**	**RSKN-100-xxxxx**	RSCN-015-00092	RSTN-03x-00092	RSRY-708-00312	5
1.4638 - 1.5051	37.18 - 38.23	**RSKN-200-xxxxx**	**RSKN-100-xxxxx**	RSCN-015-00094	RSTN-03x-00094	RSRY-708-00312	5
1.4961 - 1.5370	38.00 - 39.04	**RSKN-200-xxxxx**	**RSKN-100-xxxxx**	RSCN-015-00096	RSTN-03x-00096	RSRY-708-00312	5
1.5272 - 1.5677	38.79 - 39.82	**RSKN-200-xxxxx**	**RSKN-100-xxxxx**	RSCN-015-00098	RSTM-03x-00080	RSRY-708-00406	5
1.5579 - 1.5992	39.57 - 40.62	**RSKN-200-xxxxx**	**RSKN-100-xxxxx**	RSCN-015-00100	RSTM-03x-00082	RSRY-708-00406	5
1.5890 - 1.6299	40.36 - 41.40	**RSKN-200-xxxxx**	**RSKN-100-xxxxx**	RSCN-015-00102	RSTN-03x-00090	RSRY-708-00406	5
1.6213 - 1.6618	41.18 - 42.21	**RSKN-200-xxxxx**	**RSKN-100-xxxxx**	RSCN-015-00104	RSTN-03x-00092	RSRY-708-00406	5
1.6520 - 1.6933	41.96 - 43.01	**RSKN-200-xxxxx**	**RSKN-100-xxxxx**	RSCN-015-00106	RSTN-03x-00094	RSRY-708-00406	5
1.6831 - 1.7240	42.75 - 43.79	**RSKN-200-xxxxx**	**RSKN-100-xxxxx**	RSCN-015-00108	RSTM-03x-00082	RSRY-708-00468	5
1.7138 - 1.7551	43.53 - 44.58	**RSKN-200-xxxxx**	**RSKN-100-xxxxx**	RSCN-015-00110	RSTN-03x-00090	RSRY-708-00468	5
1.7461 - 1.7870	44.35 - 45.39	**RSKN-200-xxxxx**	**RSKN-100-xxxxx**	RSCN-015-00112	RSTN-03x-00092	RSRY-708-00468	5
1.7772 - 1.8177	45.14 - 46.17	**RSKN-200-xxxxx**	**RSKN-100-xxxxx**	RSCN-015-00114	RSTN-03x-00094	RSRY-708-00468	5
1.8079 - 1.8492	45.92 - 46.97	**RSKN-200-xxxxx**	**RSKN-100-xxxxx**	RSCN-015-00116	RSTN-03x-00096	RSRY-708-00468	5

*xxxxx = Indicate to 2 metric decimal places the size to be burnished (e.g. roller burnisher Ø 40.00mm with straight shank: RSKN-100-04000).
**x = A number that will vary from 2 to 8 depending upon the exact diameter to be burnished. See page D: 6 for the correct identification of the "x" value.
NOTE: Each roller burnishing tool comes assembled complete with cage, cone, and rolls.

D: 42 - 45 | D: 40 - 41 | D: 39

Key on D: 1

Roller Burnishing Tools | Through Holes

O Series | Diameter Range: 1.8390" - 2.2240" (46.71mm - 56.49mm)

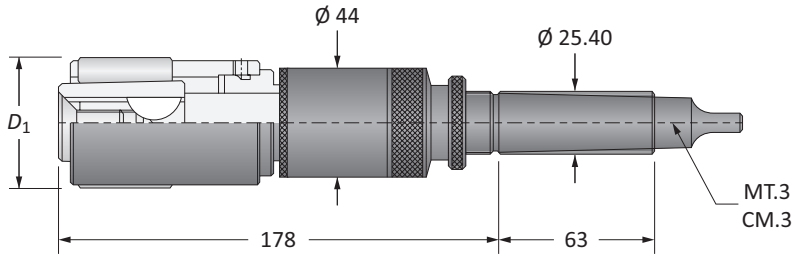

Through Holes

D_1		Part No.		Spare Parts			
Imperial (in)	Metric (mm)	Assembly with Morse Taper Shank	Assembly with Straight Shank	Cage	Cone	Rolls	Qty Rolls
1.8390 - 1.8799	46.71 - 47.75	**RDKO-200-04671**	**RDKO-100-04671**	RDCO-011-00118	RDTO-031-00118	RDRY-701-00312	9
1.8713 - 1.9118	47.53 - 48.56	**RDKO-200-04753**	**RDKO-100-04753**	RDCO-011-00120	RDTO-031-00120	RDRY-701-00312	9
1.9020 - 1.9433	48.31 - 49.36	**RDKO-200-04831**	**RDKO-100-04831**	RDCO-011-00122	RDTO-031-00122	RDRY-701-00312	9
1.9331 - 1.9740	49.10 - 50.14	**RDKO-200-04910**	**RDKO-100-04910**	RDCO-011-00124	RDTO-031-00124	RDRY-701-00312	9
1.9638 - 2.0051	49.88 - 50.93	**RDKO-200-04988**	**RDKO-100-04988**	RDCO-011-00126	RDTO-031-00126	RDRY-701-00312	9
1.9961 - 2.0370	50.70 - 51.74	**RDKO-200-05070**	**RDKO-100-05070**	RDCO-011-00128	RDTO-031-00128	RDRY-701-00312	9
2.0272 - 2.0681	51.49 - 52.53	**RDKO-200-05149**	**RDKO-100-05149**	RDCO-011-00130	RDTO-031-00118	RDRY-701-00406	9
2.0579 - 2.0992	52.27 - 53.32	**RDKO-200-05227**	**RDKO-100-05227**	RDCO-011-00132	RDTO-031-00120	RDRY-701-00406	9
2.0890 - 2.1299	53.06 - 54.10	**RDKO-200-05306**	**RDKO-100-05306**	RDCO-011-00134	RDTO-031-00122	RDRY-701-00406	9
2.1209 - 2.1618	53.87 - 54.91	**RDKO-200-05387**	**RDKO-100-05387**	RDCO-011-00136	RDTO-031-00124	RDRY-701-00406	9
2.1520 - 2.1933	54.66 - 55.71	**RDKO-200-05466**	**RDKO-100-05466**	RDCO-011-00138	RDTO-031-00126	RDRY-701-00406	9
2.1831 - 2.2240	55.45 - 56.49	**RDKO-200-05545**	**RDKO-100-05545**	RDCO-011-00140	RDTO-031-00128	RDRY-701-00406	9

NOTE: Each roller burnishing tool comes assembled complete with cage, cone, and rolls.

D: 42 - 45 | D: 40 - 41 | D: 38

Key on D: 1

Roller Burnishing Tools | Blind Holes

O Series | Diameter Range: 1.8390" - 2.2240" (46.71mm - 56.49mm)

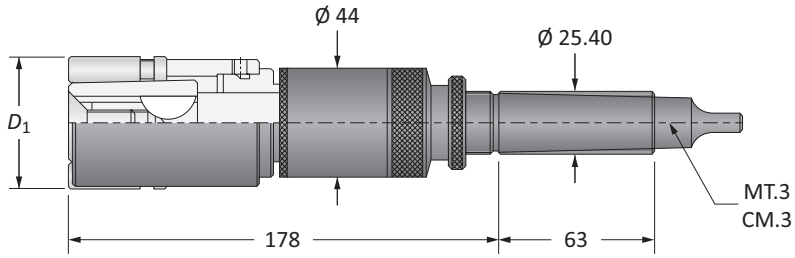

Blind Holes

D_1		Part No.*		Spare Parts			
Imperial (in)	Metric (mm)	Assembly with Morse Taper Shank	Assembly with Straight Shank	Cage	Cone**	Rolls	Qty Rolls
1.8390 - 1.8799	46.71 - 47.75	**RSKO-200-xxxxx**	**RSKO-100-xxxxx**	RSCO-015-00118	RSTO-03x-00118	RSRY-708-00312	7
1.8713 - 1.9118	47.53 - 48.56	**RSKO-200-xxxxx**	**RSKO-100-xxxxx**	RSCO-015-00120	RSTO-03x-00120	RSRY-708-00312	7
1.9020 - 1.9433	48.31 - 49.36	**RSKO-200-xxxxx**	**RSKO-100-xxxxx**	RSCO-015-00122	RSTO-03x-00122	RSRY-708-00312	7
1.9331 - 1.9740	49.10 - 50.14	**RSKO-200-xxxxx**	**RSKO-100-xxxxx**	RSCO-015-00124	RSTO-03x-00124	RSRY-708-00312	7
1.9638 - 2.0051	49.88 - 50.93	**RSKO-200-xxxxx**	**RSKO-100-xxxxx**	RSCO-015-00126	RSTO-03x-00126	RSRY-708-00312	7
1.9961 - 2.0370	50.70 - 51.74	**RSKO-200-xxxxx**	**RSKO-100-xxxxx**	RSCO-015-00128	RSTO-03x-00128	RSRY-708-00312	7
2.0272 - 2.0681	51.49 - 52.53	**RSKO-200-xxxxx**	**RSKO-100-xxxxx**	RSCO-015-00130	RSTO-03x-00118	RSRY-708-00406	7
2.0579 - 2.0992	52.27 - 53.32	**RSKO-200-xxxxx**	**RSKO-100-xxxxx**	RSCO-015-00132	RSTO-03x-00120	RSRY-708-00406	7
2.0890 - 2.1299	53.06 - 54.10	**RSKO-200-xxxxx**	**RSKO-100-xxxxx**	RSCO-015-00134	RSTO-03x-00122	RSRY-708-00406	7
2.1209 - 2.1618	53.87 - 54.91	**RSKO-200-xxxxx**	**RSKO-100-xxxxx**	RSCO-015-00136	RSTO-03x-00124	RSRY-708-00406	7
2.1520 - 2.1933	54.66 - 55.71	**RSKO-200-xxxxx**	**RSKO-100-xxxxx**	RSCO-015-00138	RSTO-03x-00126	RSRY-708-00406	7
2.1831 - 2.2240	55.45 - 56.49	**RSKO-200-xxxxx**	**RSKO-100-xxxxx**	RSCO-015-00140	RSTO-03x-00128	RSRY-708-00406	7

*xxxxx = Indicate to 2 metric decimal places the size to be burnished (e.g. roller burnisher Ø 50.25mm with MT.3 shank: RSKO-200-05025).
**x = A number that will vary from 2 to 8 depending upon the exact diameter to be burnished. See page D: 6 for the correct identification of the "x" value.
NOTE: Each roller burnishing tool comes assembled complete with cage, cone, and rolls.

D: 42 - 45 | D: 40 - 41 | D: 39

Key on D: 1

Roller Burnishing Tools | Through Holes

P Series | Diameter Range: 2.2138" - 2.7240" (56.23mm - 69.19mm)

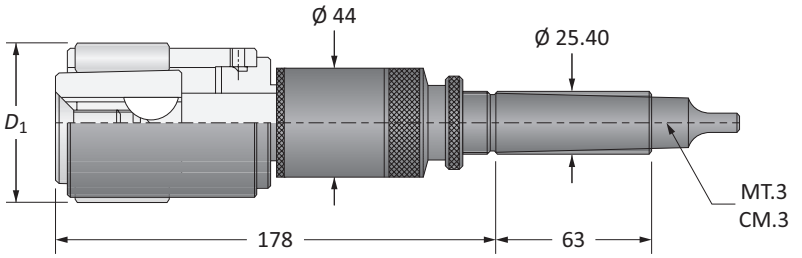

Through Holes

D_1		Part No.		Spare Parts			
Imperial (in)	Metric (mm)	Assembly with Morse Taper Shank	Assembly with Straight Shank	Cage	Cone	Rolls	Qty Rolls
2.2138 - 2.2551	56.23 - 57.28	**RDKP-200-05623**	**RDKP-100-05623**	RDCP-011-00142	RDTP-031-00142	RDRY-701-00406	9
2.2461 - 2.2870	57.05 - 58.09	**RDKP-200-05705**	**RDKP-100-05705**	RDCP-011-00144	RDTP-031-00144	RDRY-701-00406	9
2.2772 - 2.3177	57.84 - 58.87	**RDKP-200-05784**	**RDKP-100-05784**	RDCP-011-00146	RDTP-031-00146	RDRY-701-00406	9
2.3079 - 2.3492	58.62 - 59.67	**RDKP-200-05862**	**RDKP-100-05862**	RDCP-011-00148	RDTP-031-00148	RDRY-701-00406	9
2.3390 - 2.3799	59.41 - 60.45	**RDKP-200-05941**	**RDKP-100-05941**	RDCP-011-00150	RDTP-031-00142	RDRY-701-00468	9
2.3713 - 2.4118	60.23 - 61.26	**RDKP-200-06023**	**RDKP-100-06023**	RDCP-011-00152	RDTP-031-00144	RDRY-701-00468	9
2.4020 - 2.4433	61.01 - 62.06	**RDKP-200-06101**	**RDKP-100-06101**	RDCP-011-00154	RDTP-031-00146	RDRY-701-00468	9
2.4330 - 2.4740	61.80 - 62.84	**RDKP-200-06180**	**RDKP-100-06180**	RDCP-011-00156	RDTP-031-00148	RDRY-701-00468	9
2.4638 - 2.5051	62.58 - 63.63	**RDKP-200-06258**	**RDKP-100-06258**	RDCP-011-00158	RDTP-031-00158	RDRY-701-00468	9
2.4961 - 2.5370	63.40 - 64.44	**RDKP-200-06340**	**RDKP-100-06340**	RDCP-011-00160	RDTP-031-00160	RDRY-701-00468	9
2.5272 - 2.5677	64.19 - 65.22	**RDKP-200-06419**	**RDKP-100-06419**	RDCP-011-00162	RDTP-031-00162	RDRY-701-00468	9
2.5579 - 2.5992	64.97 - 66.02	**RDKP-200-06497**	**RDKP-100-06497**	RDCP-011-00164	RDTP-031-00164	RDRY-701-00468	9
2.5890 - 2.6299	65.76 - 66.80	**RDKP-200-06576**	**RDKP-100-06576**	RDCP-011-00166	RDTP-031-00158	RDRY-701-00531	9
2.6213 - 2.6618	66.58 - 67.61	**RDKP-200-06658**	**RDKP-100-06658**	RDCP-011-00168	RDTP-031-00160	RDRY-701-00531	9
2.6520 - 2.6933	67.36 - 68.41	**RDKP-200-06736**	**RDKP-100-06736**	RDCP-011-00170	RDTP-031-00162	RDRY-701-00531	9
2.6830 - 2.7240	68.15 - 69.19	**RDKP-200-06815**	**RDKP-100-06815**	RDCP-011-00172	RDTP-031-00164	RDRY-701-00531	9

NOTE: Each roller burnishing tool comes assembled complete with cage, cone, and rolls.

D: 42 - 45 | D: 40 - 41 | D: 38

Key on D: 1

Roller Burnishing Tools | Blind Holes

P Series | Diameter Range: 2.2138" - 2.7240" (56.23mm - 69.19mm)

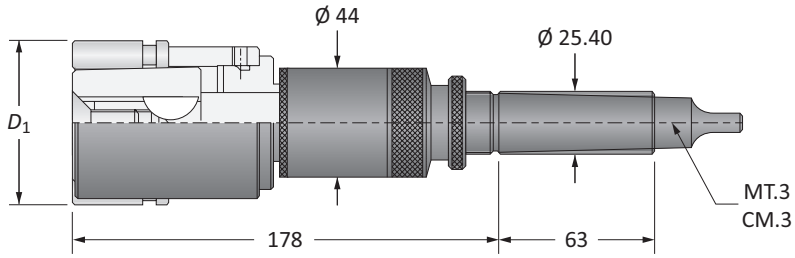

Blind Holes

D_1		Part No.*		Spare Parts			
Imperial (in)	Metric (mm)	Assembly with Morse Taper Shank	Assembly with Straight Shank	Cage	Cone**	Rolls	Qty Rolls
2.2138 - 2.2551	56.23 - 57.28	**RSKP-200-xxxxx**	**RSKP-100-xxxxx**	RSCP-015-00142	RSTP-03x-00142	RSRY-708-00406	7
2.2461 - 2.2870	57.05 - 58.09	**RSKP-200-xxxxx**	**RSKP-100-xxxxx**	RSCP-015-00144	RSTP-03x-00144	RSRY-708-00406	7
2.2772 - 2.3177	57.84 - 58.87	**RSKP-200-xxxxx**	**RSKP-100-xxxxx**	RSCP-015-00146	RSTP-03x-00146	RSRY-708-00406	7
2.3079 - 2.3492	58.62 - 59.67	**RSKP-200-xxxxx**	**RSKP-100-xxxxx**	RSCP-015-00148	RSTP-03x-00148	RSRY-708-00406	7
2.3390 - 2.3799	59.41 - 60.45	**RSKP-200-xxxxx**	**RSKP-100-xxxxx**	RSCP-015-00150	RSTP-03x-00142	RSRY-708-00468	7
2.3713 - 2.4118	60.23 - 61.26	**RSKP-200-xxxxx**	**RSKP-100-xxxxx**	RSCP-015-00152	RSTP-03x-00144	RSRY-708-00468	7
2.4020 - 2.4433	61.01 - 62.06	**RSKP-200-xxxxx**	**RSKP-100-xxxxx**	RSCP-015-00154	RSTP-03x-00146	RSRY-708-00468	7
2.4330 - 2.4740	61.80 - 62.84	**RSKP-200-xxxxx**	**RSKP-100-xxxxx**	RSCP-015-00156	RSTP-03x-00148	RSRY-708-00468	7
2.4638 - 2.5051	62.58 - 63.63	**RSKP-200-xxxxx**	**RSKP-100-xxxxx**	RSCP-015-00158	RSTP-03x-00158	RSRY-708-00468	7
2.4961 - 2.5370	63.40 - 64.44	**RSKP-200-xxxxx**	**RSKP-100-xxxxx**	RSCP-015-00160	RSTP-03x-00160	RSRY-708-00468	7
2.5272 - 2.5677	64.19 - 65.22	**RSKP-200-xxxxx**	**RSKP-100-xxxxx**	RSCP-015-00162	RSTP-03x-00162	RSRY-708-00468	7
2.5579 - 2.5992	64.97 - 66.02	**RSKP-200-xxxxx**	**RSKP-100-xxxxx**	RSCP-015-00164	RSTP-03x-00164	RSRY-708-00468	7
2.5890 - 2.6299	65.76 - 66.80	**RSKP-200-xxxxx**	**RSKP-100-xxxxx**	RSCP-015-00166	RSTP-03x-00158	RSRY-708-00531	7
2.6213 - 2.6618	66.58 - 67.61	**RSKP-200-xxxxx**	**RSKP-100-xxxxx**	RSCP-015-00168	RSTP-03x-00160	RSRY-708-00531	7
2.6520 - 2.6933	67.36 - 68.41	**RSKP-200-xxxxx**	**RSKP-100-xxxxx**	RSCP-015-00170	RSTP-03x-00162	RSRY-708-00531	7
2.6830 - 2.7240	68.15 - 69.19	**RSKP-200-xxxxx**	**RSKP-100-xxxxx**	RSCP-015-00172	RSTP-03x-00164	RSRY-708-00531	7

*xxxxx = Indicate to 2 metric decimal places the size to be burnished (e.g. roller burnisher Ø 60.05mm with straight shank: RSKP-100-06005).
**x = A number that will vary from 2 to 8 depending upon the exact diameter to be burnished. See page D: 6 for the correct identification of the "x" value.
NOTE: Each roller burnishing tool comes assembled complete with cage, cone, and rolls.

D: 42 - 45
D: 40 - 41
D: 39
Key on D: 1

Roller Burnishing Tools | Through Holes

Q Series | Diameter Range: 2.7138" - 3.3492" (68.93mm - 85.07mm)

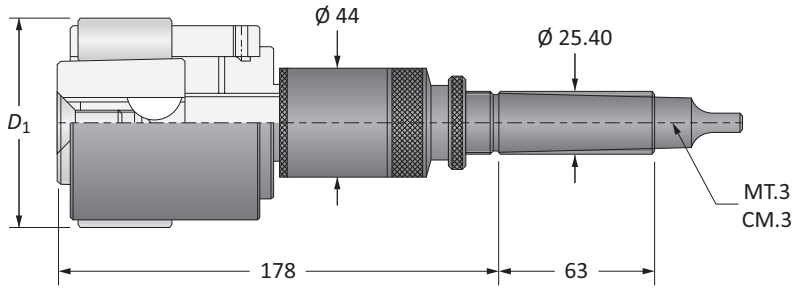

Through Holes

D_1		Part No.		Spare Parts			
Imperial (in)	Metric (mm)	Assembly with Morse Taper Shank	Assembly with Straight Shank	Cage	Cone	Rolls	Qty Rolls
2.7138 - 2.7551	68.93 - 69.98	**RDKQ-200-06893**	**RDKQ-100-06893**	RDCQ-011-00174	RDTQ-031-00174	RDRY-701-00531	9
2.7461 - 2.7870	69.75 - 70.79	**RDKQ-200-06975**	**RDKQ-100-06975**	RDCQ-011-00176	RDTQ-031-00176	RDRY-701-00531	9
2.7772 - 2.8177	70.54 - 71.57	**RDKQ-200-07054**	**RDKQ-100-07054**	RDCQ-011-00178	RDTQ-031-00178	RDRY-701-00531	9
2.8079 - 2.8504	71.32 - 72.40	**RDKQ-200-07132**	**RDKQ-100-07132**	RDCQ-011-00180	RDTQ-031-00180	RDRY-701-00531	9
2.8390 - 2.8799	72.11 - 73.15	**RDKQ-200-07211**	**RDKQ-100-07211**	RDCQ-011-00182	RDTQ-031-00182	RDRY-701-00531	9
2.8713 - 2.9118	72.93 - 73.96	**RDKQ-200-07293**	**RDKQ-100-07293**	RDCQ-011-00184	RDTQ-031-00184	RDRY-701-00531	9
2.9020 - 2.9429	73.71 - 74.75	**RDKQ-200-07371**	**RDKQ-100-07371**	RDCQ-011-00186	RDTQ-031-00174	RDRY-701-00625	9
2.9331 - 2.9740	74.50 - 75.54	**RDKQ-200-07450**	**RDKQ-100-07450**	RDCQ-011-00188	RDTQ-031-00176	RDRY-701-00625	9
2.9638 - 3.0051	75.28 - 76.33	**RDKQ-200-07528**	**RDKQ-100-07528**	RDCQ-011-00190	RDTQ-031-00178	RDRY-701-00625	9
2.9961 - 3.0370	76.10 - 77.14	**RDKQ-200-07610**	**RDKQ-100-07610**	RDCQ-011-00192	RDTQ-031-00180	RDRY-701-00625	9
3.0272 - 3.0681	76.89 - 77.93	**RDKQ-200-07689**	**RDKQ-100-07689**	RDCQ-011-00194	RDTQ-031-00182	RDRY-701-00625	9
3.0579 - 3.0992	77.67 - 78.72	**RDKQ-200-07767**	**RDKQ-100-07767**	RDCQ-011-00196	RDTQ-031-00184	RDRY-701-00625	9
3.0890 - 3.1299	78.46 - 79.50	**RDKQ-200-07846**	**RDKQ-100-07846**	RDCQ-011-00198	RDTQ-031-00198	RDRY-701-00625	9
3.1209 - 3.1618	79.27 - 80.31	**RDKQ-200-07927**	**RDKQ-100-07927**	RDCQ-011-00200	RDTQ-031-00200	RDRY-701-00625	9
3.1520 - 3.1933	80.06 - 81.11	**RDKQ-200-08006**	**RDKQ-100-08006**	RDCQ-011-00202	RDTQ-031-00202	RDRY-701-00625	9
3.1831 - 3.2240	80.85 - 81.89	**RDKQ-200-08085**	**RDKQ-100-08085**	RDCQ-011-00204	RDTQ-031-00204	RDRY-701-00625	9
3.2138 - 3.2551	81.63 - 82.68	**RDKQ-200-08163**	**RDKQ-100-08163**	RDCQ-011-00206	RDTQ-031-00198	RDRY-701-00687	9
3.2461 - 3.2870	82.45 - 83.49	**RDKQ-200-08245**	**RDKQ-100-08245**	RDCQ-011-00208	RDTQ-031-00200	RDRY-701-00687	9
3.2772 - 3.3177	83.24 - 84.27	**RDKQ-200-08324**	**RDKQ-100-08324**	RDCQ-011-00210	RDTQ-031-00202	RDRY-701-00687	9
3.3079 - 3.3492	84.02 - 85.07	**RDKQ-200-08402**	**RDKQ-100-08402**	RDCQ-011-00212	RDTQ-031-00204	RDRY-701-00687	9

NOTE: Each roller burnishing tool comes assembled complete with cage, cone, and rolls.

D: 42 - 45 | D: 40 - 41 | D: 38

Key on D: 1

Roller Burnishing Tools | Blind Holes

Q Series | Diameter Range: 2.7138" - 3.3492" (68.93mm - 85.07mm)

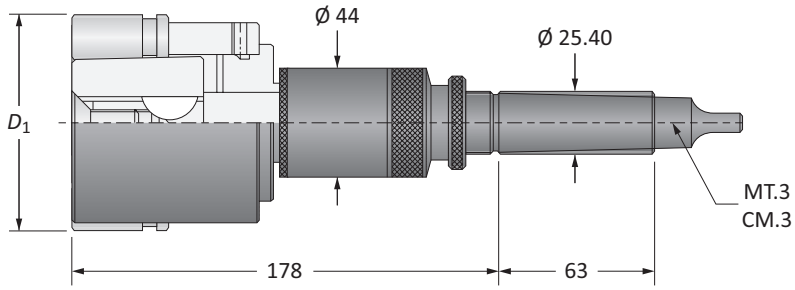

Blind Holes

D_1		Part No.*		Spare Parts			
Imperial (in)	Metric (mm)	Assembly with Morse Taper Shank	Assembly with Straight Shank	Cage	Cone**	Rolls	Qty Rolls
2.7138 - 2.7551	68.93 - 69.98	**RSKQ-200-xxxxx**	**RSKQ-100-xxxxx**	RSCQ-015-00174	RSTQ-03x-00174	RSRY-708-00531	7
2.7461 - 2.7870	69.75 - 70.79	**RSKQ-200-xxxxx**	**RSKQ-100-xxxxx**	RSCQ-015-00176	RSTQ-03x-00176	RSRY-708-00531	7
2.7772 - 2.8177	70.54 - 71.57	**RSKQ-200-xxxxx**	**RSKQ-100-xxxxx**	RSCQ-015-00178	RSTQ-03x-00178	RSRY-708-00531	7
2.8079 - 2.8504	71.32 - 72.40	**RSKQ-200-xxxxx**	**RSKQ-100-xxxxx**	RSCQ-015-00180	RSTQ-03x-00180	RSRY-708-00531	7
2.8390 - 2.8799	72.11 - 73.15	**RSKQ-200-xxxxx**	**RSKQ-100-xxxxx**	RSCQ-015-00182	RSTQ-03x-00182	RSRY-708-00531	7
2.8713 - 2.9118	72.93 - 73.96	**RSKQ-200-xxxxx**	**RSKQ-100-xxxxx**	RSCQ-015-00184	RSTQ-03x-00184	RSRY-708-00531	7
2.9020 - 2.9429	73.71 - 74.75	**RSKQ-200-xxxxx**	**RSKQ-100-xxxxx**	RSCQ-015-00186	RSTQ-03x-00174	RSRY-708-00625	7
2.9331 - 2.9740	74.50 - 75.54	**RSKQ-200-xxxxx**	**RSKQ-100-xxxxx**	RSCQ-015-00188	RSTQ-03x-00176	RSRY-708-00625	7
2.9638 - 3.0051	75.28 - 76.33	**RSKQ-200-xxxxx**	**RSKQ-100-xxxxx**	RSCQ-015-00190	RSTQ-03x-00178	RSRY-708-00625	7
2.9961 - 3.0370	76.10 - 77.14	**RSKQ-200-xxxxx**	**RSKQ-100-xxxxx**	RSCQ-015-00192	RSTQ-03x-00180	RSRY-708-00625	7
3.0272 - 3.0681	76.89 - 77.93	**RSKQ-200-xxxxx**	**RSKQ-100-xxxxx**	RSCQ-015-00194	RSTQ-03x-00182	RSRY-708-00625	7
3.0579 - 3.0992	77.67 - 78.72	**RSKQ-200-xxxxx**	**RSKQ-100-xxxxx**	RSCQ-015-00196	RSTQ-03x-00184	RSRY-708-00625	7
3.0890 - 3.1299	78.46 - 79.50	**RSKQ-200-xxxxx**	**RSKQ-100-xxxxx**	RSCQ-015-00198	RSTQ-03x-00198	RSRY-708-00625	7
3.1209 - 3.1618	79.27 - 80.31	**RSKQ-200-xxxxx**	**RSKQ-100-xxxxx**	RSCQ-015-00200	RSTQ-03x-00200	RSRY-708-00625	7
3.1520 - 3.1933	80.06 - 81.11	**RSKQ-200-xxxxx**	**RSKQ-100-xxxxx**	RSCQ-015-00202	RSTQ-03x-00202	RSRY-708-00625	7
3.1831 - 3.2240	80.85 - 81.89	**RSKQ-200-xxxxx**	**RSKQ-100-xxxxx**	RSCQ-015-00204	RSTQ-03x-00204	RSRY-708-00625	7
3.2138 - 3.2551	81.63 - 82.68	**RSKQ-200-xxxxx**	**RSKQ-100-xxxxx**	RSCQ-015-00206	RSTQ-03x-00198	RSRY-708-00687	7
3.2461 - 3.2870	82.45 - 83.49	**RSKQ-200-xxxxx**	**RSKQ-100-xxxxx**	RSCQ-015-00208	RSTQ-03x-00200	RSRY-708-00687	7
3.2772 - 3.3177	83.24 - 84.27	**RSKQ-200-xxxxx**	**RSKQ-100-xxxxx**	RSCQ-015-00210	RSTQ-03x-00202	RSRY-708-00687	7
3.3079 - 3.3492	84.02 - 85.07	**RSKQ-200-xxxxx**	**RSKQ-100-xxxxx**	RSCQ-015-00212	RSTQ-03x-00204	RSRY-708-00687	7

*xxxxx = Indicate to 2 metric decimal places the size to be burnished (e.g. roller burnisher Ø 75.00mm with MT.3 shank: RSKQ-200-07500).
**x = A number that will vary from 2 to 8 depending upon the exact diameter to be burnished. See page D: 6 for the correct identification of the "x" value.
NOTE: Each roller burnishing tool comes assembled complete with cage, cone, and rolls.

D: 42 - 45
Key on D: 1
D: 40 - 41
D: 39

Roller Burnishing Tools | Through Holes

R Series | Diameter Range: 3.3390 - 4.0992" (84.81mm - 104.12mm)

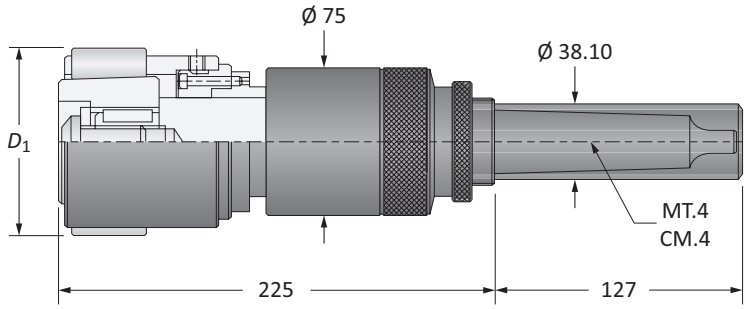

Through Holes

D_1		Part No.		Spare Parts			
Imperial (in)	Metric (mm)	Assembly with Morse Taper Shank	Assembly with Straight Shank	Cage	Cone	Rolls	Qty Rolls
3.3390 - 3.3799	84.81 - 85.85	**RDKR-200-08481**	**RDKR-100-08481**	RDCR-011-00214	RDTR-073-00001	RDRY-701-00468	9
3.3713 - 3.4118	85.63 - 86.66	**RDKR-200-08563**	**RDKR-100-08563**	RDCR-011-00216	RDTR-074-00001	RDRY-701-00468	9
3.4020 - 3.4429	86.41 - 87.45	**RDKR-200-08641**	**RDKR-100-08641**	RDCR-011-00218	RDTR-071-00001	RDRY-701-00531	9
3.4331 - 3.4740	87.20 - 88.24	**RDKR-200-08720**	**RDKR-100-08720**	RDCR-011-00220	RDTR-072-00001	RDRY-701-00531	9
3.4642 - 3.5051	87.99 - 89.03	**RDKR-200-08799**	**RDKR-100-08799**	RDCR-011-00222	RDTR-073-00001	RDRY-701-00531	9
3.4957 - 3.5370	88.79 - 89.84	**RDKR-200-08879**	**RDKR-100-08879**	RDCR-011-00224	RDTR-074-00001	RDRY-701-00531	9
3.5272 - 3.5681	89.59 - 90.63	**RDKR-200-08959**	**RDKR-100-08959**	RDCR-011-00226	RDTR-075-00001	RDRY-701-00531	9
3.5579 - 3.5992	90.37 - 91.42	**RDKR-200-09037**	**RDKR-100-09037**	RDCR-011-00228	RDTR-076-00001	RDRY-701-00531	9
3.5890 - 3.6299	91.16 - 92.20	**RDKR-200-09116**	**RDKR-100-09116**	RDCR-011-00230	RDTR-071-00001	RDRY-701-00625	9
3.6209 - 3.6622	91.97 - 93.02	**RDKR-200-09197**	**RDKR-100-09197**	RDCR-011-00232	RDTR-072-00001	RDRY-701-00625	9
3.6520 - 3.6929	92.76 - 93.80	**RDKR-200-09276**	**RDKR-100-09276**	RDCR-011-00234	RDTR-073-00001	RDRY-701-00625	9
3.6831 - 3.7240	93.55 - 94.59	**RDKR-200-09355**	**RDKR-100-09355**	RDCR-011-00236	RDTR-074-00001	RDRY-701-00625	9
3.7142 - 3.7551	94.34 - 95.38	**RDKR-200-09434**	**RDKR-100-09434**	RDCR-011-00238	RDTR-075-00001	RDRY-701-00625	9
3.7461 - 3.7870	95.15 - 96.19	**RDKR-200-09515**	**RDKR-100-09515**	RDCR-011-00240	RDTR-076-00001	RDRY-701-00625	9
3.7772 - 3.8181	95.94 - 96.98	**RDKR-200-09594**	**RDKR-100-09594**	RDCR-011-00242	RDTR-077-00001	RDRY-701-00625	9
3.8079 - 3.8492	96.72 - 97.77	**RDKR-200-09672**	**RDKR-100-09672**	RDCR-011-00244	RDTR-078-00001	RDRY-701-00625	9
3.8390 - 3.8799	97.51 - 98.55	**RDKR-200-09751**	**RDKR-100-09751**	RDCR-011-00246	RDTR-075-00001	RDRY-701-00687	9
3.8709 - 3.9122	98.32 - 99.37	**RDKR-200-09832**	**RDKR-100-09832**	RDCR-011-00248	RDTR-076-00001	RDRY-701-00687	9
3.9020 - 3.9429	99.11 - 100.15	**RDKR-200-09911**	**RDKR-100-09911**	RDCR-011-00250	RDTR-077-00001	RDRY-701-00687	9
3.9331 - 3.9740	99.90 - 100.94	**RDKR-200-09990**	**RDKR-100-09990**	RDCR-011-00252	RDTR-078-00001	RDRY-701-00687	9
3.9642 - 4.0051	100.69 - 101.73	**RDKR-200-10069**	**RDKR-100-10069**	RDCR-011-00254	RDTR-079-00001	RDRY-701-00687	9
3.9961 - 4.0370	101.50 - 102.54	**RDKR-200-10150**	**RDKR-100-10150**	RDCR-011-00256	RDTR-080-00001	RDRY-701-00687	9
4.0272 - 1.0681	102.29 - 103.33	**RDKR-200-10229**	**RDKR-100-10229**	RDCR-011-00258	RDTR-081-00001	RDRY-701-00687	9
4.0579 - 4.0992	103.07 - 104.12	**RDKR-200-10307**	**RDKR-100-10307**	RDCR-011-00260	RDTR-082-00001	RDRY-701-00687	9

NOTE: Each roller burnishing tool comes assembled complete with cage, cone, and rolls.

D: 42 - 45

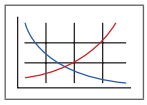

Key on D: 1

D: 40 - 41

D: 38

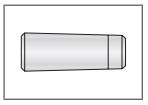

Roller Burnishing Tools | Blind Holes

R Series | Diameter Range: 3.3390 - 4.0992" (84.81mm - 104.12mm)

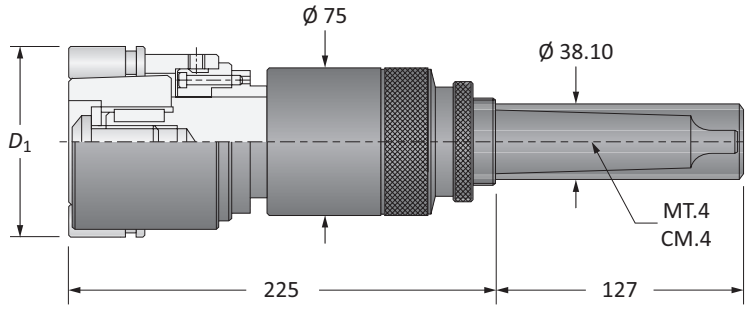

Blind Holes

D_1		Part No.*		Spare Parts			
Imperial (in)	Metric (mm)	Assembly with Morse Taper Shank	Assembly with Straight Shank	Cage	Cone**	Rolls	Qty Rolls
3.3390 - 3.3799	84.81 - 85.85	**RSKR-200-xxxxx**	**RSKR-100-xxxxx**	RSCR-015-00214	RSTR-073-0000x	RSRY-708-00468	9
3.3713 - 3.4118	85.63 - 86.66	**RSKR-200-xxxxx**	**RSKR-100-xxxxx**	RSCR-015-00216	RSTR-074-0000x	RSRY-708-00468	9
3.4020 - 3.4429	86.41 - 87.45	**RSKR-200-xxxxx**	**RSKR-100-xxxxx**	RSCR-015-00218	RSTR-071-0000x	RSRY-708-00531	9
3.4331 - 3.4740	87.20 - 88.24	**RSKR-200-xxxxx**	**RSKR-100-xxxxx**	RSCR-015-00220	RSTR-072-0000x	RSRY-708-00531	9
3.4642 - 3.5051	87.99 - 89.03	**RSKR-200-xxxxx**	**RSKR-100-xxxxx**	RSCR-015-00222	RSTR-073-0000x	RSRY-708-00531	9
3.4957 - 3.5370	88.79 - 89.84	**RSKR-200-xxxxx**	**RSKR-100-xxxxx**	RSCR-015-00224	RSTR-074-0000x	RSRY-708-00531	9
3.5272 - 3.5681	89.59 - 90.63	**RSKR-200-xxxxx**	**RSKR-100-xxxxx**	RSCR-015-00226	RSTR-075-0000x	RSRY-708-00531	9
3.5579 - 3.5992	90.37 - 91.42	**RSKR-200-xxxxx**	**RSKR-100-xxxxx**	RSCR-015-00228	RSTR-076-0000x	RSRY-708-00531	9
3.5890 - 3.6299	91.16 - 92.20	**RSKR-200-xxxxx**	**RSKR-100-xxxxx**	RSCR-015-00230	RSTR-071-0000x	RSRY-708-00625	9
3.6209 - 3.6622	91.97 - 93.02	**RSKR-200-xxxxx**	**RSKR-100-xxxxx**	RSCR-015-00232	RSTR-072-0000x	RSRY-708-00625	9
3.6520 - 3.6929	92.76 - 93.80	**RSKR-200-xxxxx**	**RSKR-100-xxxxx**	RSCR-015-00234	RSTR-073-0000x	RSRY-708-00625	9
3.6831 - 3.7240	93.55 - 94.59	**RSKR-200-xxxxx**	**RSKR-100-xxxxx**	RSCR-015-00236	RSTR-074-0000x	RSRY-708-00625	9
3.7142 - 3.7551	94.34 - 95.38	**RSKR-200-xxxxx**	**RSKR-100-xxxxx**	RSCR-015-00238	RSTR-075-0000x	RSRY-708-00625	9
3.7461 - 3.7870	95.15 - 96.19	**RSKR-200-xxxxx**	**RSKR-100-xxxxx**	RSCR-015-00240	RSTR-076-0000x	RSRY-708-00625	9
3.7772 - 3.8181	95.94 - 96.98	**RSKR-200-xxxxx**	**RSKR-100-xxxxx**	RSCR-015-00242	RSTR-077-0000x	RSRY-708-00625	9
3.8079 - 3.8492	96.72 - 97.77	**RSKR-200-xxxxx**	**RSKR-100-xxxxx**	RSCR-015-00244	RSTR-078-0000x	RSRY-708-00625	9
3.8390 - 3.8799	97.51 - 98.55	**RSKR-200-xxxxx**	**RSKR-100-xxxxx**	RSCR-015-00246	RSTR-075-0000x	RSRY-708-00687	9
3.8709 - 3.9122	98.32 - 99.37	**RSKR-200-xxxxx**	**RSKR-100-xxxxx**	RSCR-015-00248	RSTR-076-0000x	RSRY-708-00687	9
3.9020 - 3.9429	99.11 - 100.15	**RSKR-200-xxxxx**	**RSKR-100-xxxxx**	RSCR-015-00250	RSTR-077-0000x	RSRY-708-00687	9
3.9331 - 3.9740	99.90 - 100.94	**RSKR-200-xxxxx**	**RSKR-100-xxxxx**	RSCR-015-00252	RSTR-078-0000x	RSRY-708-00687	9
3.9642 - 4.0051	100.69 - 101.73	**RSKR-200-xxxxx**	**RSKR-100-xxxxx**	RSCR-015-00254	RSTR-079-0000x	RSRY-708-00687	9
3.9961 - 4.0370	101.50 - 102.54	**RSKR-200-xxxxx**	**RSKR-100-xxxxx**	RSCR-015-00256	RSTR-080-0000x	RSRY-708-00687	9
4.0272 - 1.0681	102.29 - 103.33	**RSKR-200-xxxxx**	**RSKR-100-xxxxx**	RSCR-015-00258	RSTR-081-0000x	RSRY-708-00687	9
4.0579 - 4.0992	103.07 - 104.12	**RSKR-200-xxxxx**	**RSKR-100-xxxxx**	RSCR-015-00260	RSTR-082-0000x	RSRY-708-00687	9

*xxxxx = Indicate to 2 metric decimal places the size to be burnished (e.g. roller burnisher Ø 100.00mm with straight shank: RSKR-100-10000).
**x = A number that will vary from 2 to 8 depending upon the exact diameter to be burnished. See page D: 6 for the correct identification of the "x" value.
NOTE: Each roller burnishing tool comes assembled complete with cage, cone, and rolls.

D: 42 - 45 | D: 40 - 41 | D: 39

Key on D: 1

Roller Burnishing Tools | Through Holes

S Series | Diameter Range: 4.0890 - 5.0370" (103.86mm - 127.94mm)

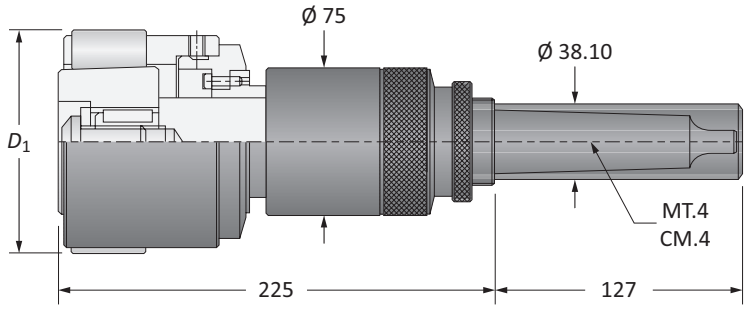

Through Holes

D_1		Part No.		Spare Parts			
Imperial (in)	Metric (mm)	Assembly with Morse Taper Shank	Assembly with Straight Shank	Cage	Cone	Rolls	Qty Rolls
4.0890 - 4.1299	103.86 - 104.90	**RDKS-200-10386**	**RDKS-100-10386**	RDCS-011-00262	RDTS-083-00001	RDRY-701-00687	9
4.1209 - 4.1634	104.67 - 105.75	**RDKS-200-10467**	**RDKS-100-10467**	RDCS-011-00264	RDTS-084-00001	RDRY-701-00687	9
4.1520 - 4.1929	105.46 - 106.50	**RDKS-200-10546**	**RDKS-100-10546**	RDCS-011-00266	RDTS-085-00001	RDRY-701-00687	9
4.1831 - 4.2240	106.25 - 107.29	**RDKS-200-10625**	**RDKS-100-10625**	RDCS-011-00268	RDTS-086-00001	RDRY-701-00687	9
4.2142 - 4.2551	107.04 - 108.08	**RDKS-200-10704**	**RDKS-100-10704**	RDCS-011-00270	RDTS-087-00001	RDRY-701-00687	9
4.2461 - 4.2870	107.85 - 108.89	**RDKS-200-10785**	**RDKS-100-10785**	RDCS-011-00272	RDTS-088-00001	RDRY-701-00687	9
4.2772 - 4.3181	108.64 - 109.68	**RDKS-200-10864**	**RDKS-100-10864**	RDCS-011-00274	RDTS-089-00001	RDRY-701-00687	9
4.3079 - 4.3492	109.42 - 110.47	**RDKS-200-10942**	**RDKS-100-10942**	RDCS-011-00276	RDTS-090-00001	RDRY-701-00687	9
4.3390 - 4.3799	110.21 - 111.25	**RDKS-200-11021**	**RDKS-100-11021**	RDCS-011-00278	RDTS-083-00001	RDRY-701-00812	9
4.3709 - 4.4122	111.02 - 112.07	**RDKS-200-11102**	**RDKS-100-11102**	RDCS-011-00280	RDTS-084-00001	RDRY-701-00812	9
4.4020 - 4.4429	111.81 - 112.85	**RDKS-200-11181**	**RDKS-100-11181**	RDCS-011-00282	RDTS-085-00001	RDRY-701-00812	9
4.4331 - 4.4740	112.60 - 113.64	**RDKS-200-11260**	**RDKS-100-11260**	RDCS-011-00284	RDTS-086-00001	RDRY-701-00812	9
4.4622 - 4.5051	113.34 - 114.43	**RDKS-200-11334**	**RDKS-100-11334**	RDCS-011-00286	RDTS-087-00001	RDRY-701-00812	9
4.4961 - 4.5370	114.20 - 115.24	**RDKS-200-11420**	**RDKS-100-11420**	RDCS-011-00288	RDTS-088-00001	RDRY-701-00812	9
4.5272 - 4.5681	114.99 - 116.03	**RDKS-200-11499**	**RDKS-100-11499**	RDCS-011-00290	RDTS-089-00001	RDRY-701-00812	9
4.5579 - 4.5992	115.77 - 116.82	**RDKS-200-11577**	**RDKS-100-11577**	RDCS-011-00292	RDTS-090-00001	RDRY-701-00812	9
4.5890 - 4.6299	116.56 - 117.60	**RDKS-200-11656**	**RDKS-100-11656**	RDCS-011-00294	RDTS-091-00001	RDRY-701-00812	9
4.6209 - 4.6622	117.37 - 118.42	**RDKS-200-11737**	**RDKS-100-11737**	RDCS-011-00296	RDTS-092-00001	RDRY-701-00812	9
4.6520 - 4.6929	118.16 - 119.20	**RDKS-200-11816**	**RDKS-100-11816**	RDCS-011-00298	RDTS-093-00001	RDRY-701-00812	9
4.6831 - 4.7240	118.95 - 119.99	**RDKS-200-11895**	**RDKS-100-11895**	RDCS-011-00300	RDTS-094-00001	RDRY-701-00812	9
4.7142 - 4.7551	119.74 - 120.78	**RDKS-200-11974**	**RDKS-100-11974**	RDCS-011-00302	RDTS-095-00001	RDRY-701-00812	9
4.7461 - 4.7870	120.55 - 121.59	**RDKS-200-12055**	**RDKS-100-12055**	RDCS-011-00304	RDTS-096-00001	RDRY-701-00812	9
4.7772 - 4.8181	121.34 - 122.38	**RDKS-200-12134**	**RDKS-100-12134**	RDCS-011-00306	RDTS-097-00001	RDRY-701-00812	9
4.8079 - 4.8492	122.12 - 123.17	**RDKS-200-12212**	**RDKS-100-12212**	RDCS-011-00308	RDTS-098-00001	RDRY-701-00812	9
4.8390 - 4.8799	122.91 - 123.95	**RDKS-200-12291**	**RDKS-100-12291**	RDCS-011-00310	RDTS-099-00001	RDRY-701-00812	9
4.8709 - 4.9122	123.72 - 124.77	**RDKS-200-12372**	**RDKS-100-12372**	RDCS-011-00312	RDTS-100-00001	RDRY-701-00812	9
4.9020 - 4.9429	124.51 - 125.55	**RDKS-200-12451**	**RDKS-100-12451**	RDCS-011-01245	RDTS-031-01245	RDRY-701-00812	9
4.9331 - 4.9740	125.30 - 126.34	**RDKS-200-12530**	**RDKS-100-12530**	RDCS-011-01255	RDTS-031-01255	RDRY-701-00812	9
4.9642 - 5.0051	126.09 - 127.13	**RDKS-200-12609**	**RDKS-100-12609**	RDCS-011-01265	RDTS-031-01265	RDRY-701-00812	9
4.9961 - 5.0370	126.90 - 127.94	**RDKS-200-12690**	**RDKS-100-12690**	RDCS-011-01275	RDTS-031-01275	RDRY-701-00812	9

NOTE: Each roller burnishing tool comes assembled complete with cage, cone, and rolls.

D: 42 - 45

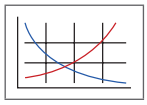

D: 40 - 41

D: 38

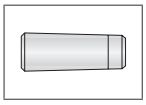

Roller Burnishing Tools | Blind Holes

S Series | Diameter Range: 4.0890 - 5.0370" (103.86mm - 127.94mm)

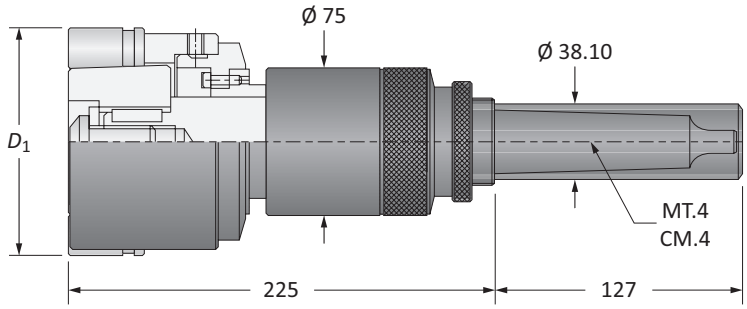

Blind Holes

D_1		Part No.*		Spare Parts			
Imperial (in)	Metric (mm)	Assembly with Morse Taper Shank	Assembly with Straight Shank	Cage	Cone**	Rolls	Qty Rolls
4.0890 - 4.1299	103.86 - 104.90	**RSKS-200-xxxxx**	**RSKS-100-xxxxx**	RSCS-015-00262	RSTS-083-0000x	RSRY-708-00687	9
4.1209 - 4.1634	104.67 - 105.75	**RSKS-200-xxxxx**	**RSKS-100-xxxxx**	RSCS-015-00264	RSTS-084-0000x	RSRY-708-00687	9
4.1520 - 4.1929	105.46 - 106.50	**RSKS-200-xxxxx**	**RSKS-100-xxxxx**	RSCS-015-00266	RSTS-085-0000x	RSRY-708-00687	9
4.1831 - 4.2240	106.25 - 107.29	**RSKS-200-xxxxx**	**RSKS-100-xxxxx**	RSCS-015-00268	RSTS-086-0000x	RSRY-708-00687	9
4.2142 - 4.2551	107.04 - 108.08	**RSKS-200-xxxxx**	**RSKS-100-xxxxx**	RSCS-015-00270	RSTS-087-0000x	RSRY-708-00687	9
4.2461 - 4.2870	107.85 - 108.89	**RSKS-200-xxxxx**	**RSKS-100-xxxxx**	RSCS-015-00272	RSTS-088-0000x	RSRY-708-00687	9
4.2772 - 4.3181	108.64 - 109.68	**RSKS-200-xxxxx**	**RSKS-100-xxxxx**	RSCS-015-00274	RSTS-089-0000x	RSRY-708-00687	9
4.3079 - 4.3492	109.42 - 110.47	**RSKS-200-xxxxx**	**RSKS-100-xxxxx**	RSCS-015-00276	RSTS-090-0000x	RSRY-708-00687	9
4.3390 - 4.3799	110.21 - 111.25	**RSKS-200-xxxxx**	**RSKS-100-xxxxx**	RSCS-015-00278	RSTS-083-0000x	RSRY-708-00812	9
4.3709 - 4.4122	111.02 - 112.07	**RSKS-200-xxxxx**	**RSKS-100-xxxxx**	RSCS-015-00280	RSTS-084-0000x	RSRY-708-00812	9
4.4020 - 4.4429	111.81 - 112.85	**RSKS-200-xxxxx**	**RSKS-100-xxxxx**	RSCS-015-00282	RSTS-085-0000x	RSRY-708-00812	9
4.4331 - 4.4740	112.60 - 113.64	**RSKS-200-xxxxx**	**RSKS-100-xxxxx**	RSCS-015-00284	RSTS-086-0000x	RSRY-708-00812	9
4.4622 - 4.5051	113.34 - 114.43	**RSKS-200-xxxxx**	**RSKS-100-xxxxx**	RSCS-015-00286	RSTS-087-0000x	RSRY-708-00812	9
4.4961 - 4.5370	114.20 - 115.24	**RSKS-200-xxxxx**	**RSKS-100-xxxxx**	RSCS-015-00288	RSTS-088-0000x	RSRY-708-00812	9
4.5272 - 4.5681	114.99 - 116.03	**RSKS-200-xxxxx**	**RSKS-100-xxxxx**	RSCS-015-00290	RSTS-089-0000x	RSRY-708-00812	9
4.5579 - 4.5992	115.77 - 116.82	**RSKS-200-xxxxx**	**RSKS-100-xxxxx**	RSCS-015-00292	RSTS-090-0000x	RSRY-708-00812	9
4.5890 - 4.6299	116.56 - 117.60	**RSKS-200-xxxxx**	**RSKS-100-xxxxx**	RSCS-015-00294	RSTS-091-0000x	RSRY-708-00812	9
4.6209 - 4.6622	117.37 - 118.42	**RSKS-200-xxxxx**	**RSKS-100-xxxxx**	RSCS-015-00296	RSTS-092-0000x	RSRY-708-00812	9
4.6520 - 4.6929	118.16 - 119.20	**RSKS-200-xxxxx**	**RSKS-100-xxxxx**	RSCS-015-00298	RSTS-093-0000x	RSRY-708-00812	9
4.6831 - 4.7240	118.95 - 119.99	**RSKS-200-xxxxx**	**RSKS-100-xxxxx**	RSCS-015-00300	RSTS-094-0000x	RSRY-708-00812	9
4.7142 - 4.7551	119.74 - 120.78	**RSKS-200-xxxxx**	**RSKS-100-xxxxx**	RSCS-015-00302	RSTS-095-0000x	RSRY-708-00812	9
4.7461 - 4.7870	120.55 - 121.59	**RSKS-200-xxxxx**	**RSKS-100-xxxxx**	RSCS-015-00304	RSTS-096-0000x	RSRY-708-00812	9
4.7772 - 4.8181	121.34 - 122.38	**RSKS-200-xxxxx**	**RSKS-100-xxxxx**	RSCS-015-00306	RSTS-097-0000x	RSRY-708-00812	9
4.8079 - 4.8492	122.12 - 123.17	**RSKS-200-xxxxx**	**RSKS-100-xxxxx**	RSCS-015-00308	RSTS-098-0000x	RSRY-708-00812	9
4.8390 - 4.8799	122.91 - 123.95	**RSKS-200-xxxxx**	**RSKS-100-xxxxx**	RSCS-015-00310	RSTS-099-0000x	RSRY-708-00812	9
4.8709 - 4.9122	123.72 - 124.77	**RSKS-200-xxxxx**	**RSKS-100-xxxxx**	RSCS-015-00312	RSTS-100-0000x	RSRY-708-00812	9
4.9020 - 4.9429	124.51 - 125.55	**RSKS-200-xxxxx**	**RSKS-100-xxxxx**	RSCS-015-01245	RSTS-03x-01245	RSRY-708-00812	9
4.9331 - 4.9740	125.30 - 126.34	**RSKS-200-xxxxx**	**RSKS-100-xxxxx**	RSCS-015-01255	RSTS-03x-01255	RSRY-708-00812	9
4.9642 - 5.0051	126.09 - 127.13	**RSKS-200-xxxxx**	**RSKS-100-xxxxx**	RSCS-015-01265	RSTS-03x-01265	RSRY-708-00812	9
4.9961 - 5.0370	126.90 - 127.94	**RSKS-200-xxxxx**	**RSKS-100-xxxxx**	RSCS-015-01275	RSTS-03x-01275	RSRY-708-00812	9

*xxxxx = Indicate to 2 metric decimal places the size to be burnished (e.g. roller burnisher Ø 120.05mm with MT.4 shank: RSKS-200-12005).
**x = A number that will vary from 2 to 8 depending upon the exact diameter to be burnished. See page D: 6 for the correct identification of the "x" value.
NOTE: Each roller burnishing tool comes assembled complete with cage, cone, and rolls.

D: 42 - 45 D: 40 - 41 D: 39
Key on D: 1

Roller Burnishing Tools | Through Holes

T Series | Diameter Range: 5.0354 - 5.9016" (127.90mm - 149.90mm)

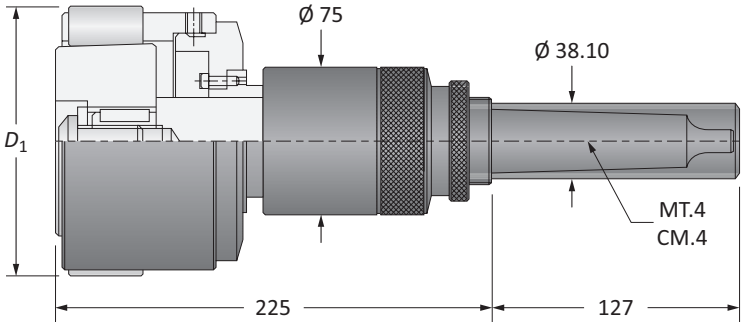

Through Holes

D_1		Part No.		Spare Parts			
Imperial (in)	Metric (mm)	Assembly with Morse Taper Shank	Assembly with Straight Shank	Cage	Cone	Rolls	Qty Rolls
5.0354 - 5.0748	127.90 - 128.90	**RDKT-200-12790**	**RDKT-100-12790**	RDCT-011-01280	RDTT-031-01280	RDRY-701-00812	11
5.0748 - 5.1142	128.90 - 129.90	**RDKT-200-12890**	**RDKT-100-12890**	RDCT-011-01290	RDTT-031-01290	RDRY-701-00812	11
5.1142 - 5.1535	129.90 - 130.90	**RDKT-200-12990**	**RDKT-100-12990**	RDCT-011-01300	RDTT-031-01300	RDRY-701-00812	11
5.1535 - 5.1929	130.90 - 131.90	**RDKT-200-13090**	**RDKT-100-13090**	RDCT-011-01310	RDTT-031-01310	RDRY-701-00812	11
5.1929 - 5.2323	131.90 - 132.90	**RDKT-200-13190**	**RDKT-100-13190**	RDCT-011-01320	RDTT-031-01320	RDRY-701-00812	11
5.2323 - 5.2717	132.90 - 133.90	**RDKT-200-13290**	**RDKT-100-13290**	RDCT-011-01330	RDTT-031-01330	RDRY-701-00812	11
5.2717 - 5.3110	133.90 - 134.90	**RDKT-200-13390**	**RDKT-100-13390**	RDCT-011-01340	RDTT-031-01340	RDRY-701-00812	11
5.3110 - 5.3504	134.90 - 135.90	**RDKT-200-13490**	**RDKT-100-13490**	RDCT-011-01350	RDTT-031-01350	RDRY-701-00812	11
5.3504 - 5.3898	135.90 - 136.90	**RDKT-200-13590**	**RDKT-100-13590**	RDCT-011-01360	RDTT-031-01360	RDRY-701-00812	11
5.3898 - 5.4291	136.90 - 137.90	**RDKT-200-13690**	**RDKT-100-13690**	RDCT-011-01370	RDTT-031-01370	RDRY-701-00812	11
5.4291 - 5.4685	137.90 - 138.90	**RDKT-200-13790**	**RDKT-100-13790**	RDCT-011-01380	RDTT-031-01380	RDRY-701-00812	11
5.4685 - 5.5079	138.90 - 139.90	**RDKT-200-13890**	**RDKT-100-13890**	RDCT-011-01390	RDTT-031-01390	RDRY-701-00812	11
5.5079 - 5.5472	139.90 - 140.90	**RDKT-200-13990**	**RDKT-100-13990**	RDCT-011-01400	RDTT-031-01400	RDRY-701-00812	11
5.5472 - 5.5866	140.90 - 141.90	**RDKT-200-14090**	**RDKT-100-14090**	RDCT-011-01410	RDTT-031-01410	RDRY-701-00812	11
5.5866 - 5.6260	141.60 - 142.90	**RDKT-200-14190**	**RDKT-100-14190**	RDCT-011-01420	RDTT-031-01420	RDRY-701-00812	11
5.6260 - 5.6654	142.90 - 143.90	**RDKT-200-14290**	**RDKT-100-14290**	RDCT-011-01430	RDTT-031-01430	RDRY-701-00812	11
5.6654 - 5.7047	143.90 - 144.90	**RDKT-200-14390**	**RDKT-100-14390**	RDCT-011-01440	RDTT-031-01440	RDRY-701-00812	11
5.7047 - 5.7441	144.90 - 145.90	**RDKT-200-14490**	**RDKT-100-14490**	RDCT-011-01450	RDTT-031-01450	RDRY-701-00812	11
5.7441 - 5.7835	145.90 - 146.90	**RDKT-200-14590**	**RDKT-100-14590**	RDCT-011-01460	RDTT-031-01460	RDRY-701-00812	11
5.7835 - 5.8228	146.90 - 147.90	**RDKT-200-14690**	**RDKT-100-14690**	RDCT-011-01470	RDTT-031-01470	RDRY-701-00812	11
5.8228 - 5.8622	147.90 - 148.90	**RDKT-200-14790**	**RDKT-100-14790**	RDCT-011-01480	RDTT-031-01480	RDRY-701-00812	11
5.8622 - 5.9016	148.90 - 149.90	**RDKT-200-14890**	**RDKT-100-14890**	RDCT-011-01490	RDTT-031-01490	RDRY-701-00812	11

NOTE: Each roller burnishing tool comes assembled complete with cage, cone, and rolls.

D: 42 - 45 | D: 40 - 41 | D: 38

Key on D: 1

Roller Burnishing Tools | Blind Holes

T Series | Diameter Range: 5.0354 - 5.9016" (127.90mm - 149.90mm)

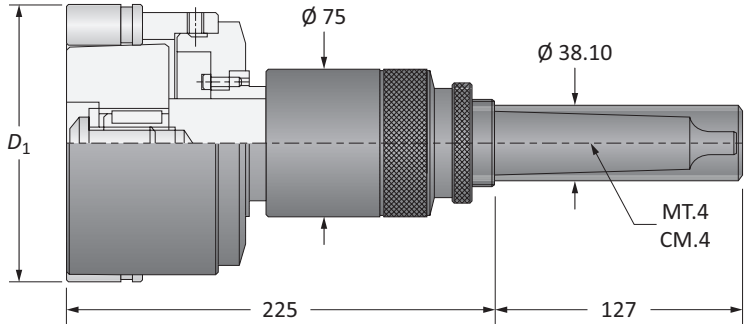

Blind Holes

D_1		Part No.*		Spare Parts			
Imperial (in)	Metric (mm)	Assembly with Morse Taper Shank	Assembly with Straight Shank	Cage	Cone**	Rolls	Qty Rolls
5.0354 - 5.0748	127.90 - 128.90	**RSKT-200-xxxxx**	**RSKT-100-xxxxx**	RSCT-015-01280	RSTT-0xx-01280	RSRY-708-00812	11
5.0748 - 5.1142	128.90 - 129.90	**RSKT-200-xxxxx**	**RSKT-100-xxxxx**	RSCT-015-01290	RSTT-0xx-01290	RSRY-708-00812	11
5.1142 - 5.1535	129.90 - 130.90	**RSKT-200-xxxxx**	**RSKT-100-xxxxx**	RSCT-015-01300	RSTT-0xx-01300	RSRY-708-00812	11
5.1535 - 5.1929	130.90 - 131.90	**RSKT-200-xxxxx**	**RSKT-100-xxxxx**	RSCT-015-01310	RSTT-0xx-01310	RSRY-708-00812	11
5.1929 - 5.2323	131.90 - 132.90	**RSKT-200-xxxxx**	**RSKT-100-xxxxx**	RSCT-015-01320	RSTT-0xx-01320	RSRY-708-00812	11
5.2323 - 5.2717	132.90 - 133.90	**RSKT-200-xxxxx**	**RSKT-100-xxxxx**	RSCT-015-01330	RSTT-0xx-01330	RSRY-708-00812	11
5.2717 - 5.3110	133.90 - 134.90	**RSKT-200-xxxxx**	**RSKT-100-xxxxx**	RSCT-015-01340	RSTT-0xx-01340	RSRY-708-00812	11
5.3110 - 5.3504	134.90 - 135.90	**RSKT-200-xxxxx**	**RSKT-100-xxxxx**	RSCT-015-01350	RSTT-0xx-01350	RSRY-708-00812	11
5.3504 - 5.3898	135.90 - 136.90	**RSKT-200-xxxxx**	**RSKT-100-xxxxx**	RSCT-015-01360	RSTT-0xx-01360	RSRY-708-00812	11
5.3898 - 5.4291	136.90 - 137.90	**RSKT-200-xxxxx**	**RSKT-100-xxxxx**	RSCT-015-01370	RSTT-0xx-01370	RSRY-708-00812	11
5.4291 - 5.4685	137.90 - 138.90	**RSKT-200-xxxxx**	**RSKT-100-xxxxx**	RSCT-015-01380	RSTT-0xx-01380	RSRY-708-00812	11
5.4685 - 5.5079	138.90 - 139.90	**RSKT-200-xxxxx**	**RSKT-100-xxxxx**	RSCT-015-01390	RSTT-0xx-01390	RSRY-708-00812	11
5.5079 - 5.5472	139.90 - 140.90	**RSKT-200-xxxxx**	**RSKT-100-xxxxx**	RSCT-015-01400	RSTT-0xx-01400	RSRY-708-00812	11
5.5472 - 5.5866	140.90 - 141.90	**RSKT-200-xxxxx**	**RSKT-100-xxxxx**	RSCT-015-01410	RSTT-0xx-01410	RSRY-708-00812	11
5.5866 - 5.6260	141.60 - 142.90	**RSKT-200-xxxxx**	**RSKT-100-xxxxx**	RSCT-015-01420	RSTT-0xx-01420	RSRY-708-00812	11
5.6260 - 5.6654	142.90 - 143.90	**RSKT-200-xxxxx**	**RSKT-100-xxxxx**	RSCT-015-01430	RSTT-0xx-01430	RSRY-708-00812	11
5.6654 - 5.7047	143.90 - 144.90	**RSKT-200-xxxxx**	**RSKT-100-xxxxx**	RSCT-015-01440	RSTT-0xx-01440	RSRY-708-00812	11
5.7047 - 5.7441	144.90 - 145.90	**RSKT-200-xxxxx**	**RSKT-100-xxxxx**	RSCT-015-01450	RSTT-0xx-01450	RSRY-708-00812	11
5.7441 - 5.7835	145.90 - 146.90	**RSKT-200-xxxxx**	**RSKT-100-xxxxx**	RSCT-015-01460	RSTT-0xx-01460	RSRY-708-00812	11
5.7835 - 5.8228	146.90 - 147.90	**RSKT-200-xxxxx**	**RSKT-100-xxxxx**	RSCT-015-01470	RSTT-0xx-01470	RSRY-708-00812	11
5.8228 - 5.8622	147.90 - 148.90	**RSKT-200-xxxxx**	**RSKT-100-xxxxx**	RSCT-015-01480	RSTT-0xx-01480	RSRY-708-00812	11
5.8622 - 5.9016	148.90 - 149.90	**RSKT-200-xxxxx**	**RSKT-100-xxxxx**	RSCT-015-01490	RSTT-0xx-01490	RSRY-708-00812	11

*xxxxx = Indicate to 2 metric decimal places the size to be burnished (e.g. roller burnisher Ø 140.00mm with straight shank: RSKT-100-14000).
**x = A number that will vary from 2 to 8 depending upon the exact diameter to be burnished. See page D: 6 for the correct identification of the "x" value.
NOTE: Each roller burnishing tool comes assembled complete with cage, cone, and rolls.

D: 42 - 45
Key on D: 1
D: 40 - 41
D: 39

A DRILLING
B BORING
C REAMING
D BURNISHING
E THREADING
X SPECIALS

Roller Burnishing Tools | Through Holes

U Series | Diameter Range: 5.9016" - 6.5315" (149.90mm - 165.90mm)

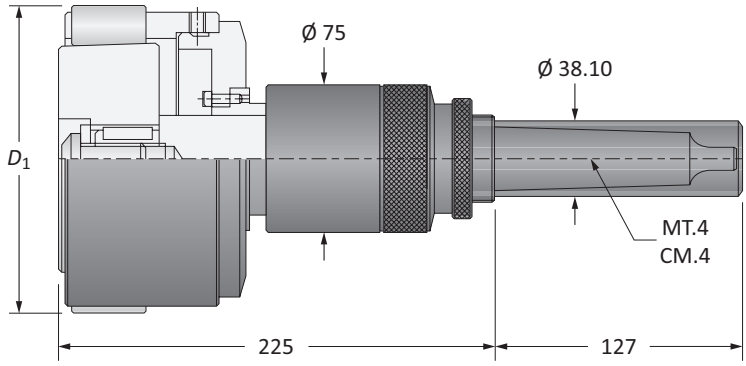

Through Holes

D_1		Part No.		Spare Parts			
Imperial (in)	Metric (mm)	Assembly with Morse Taper Shank	Assembly with Straight Shank	Cage	Cone	Rolls	Qty Rolls
5.9016 - 5.9409	149.90 - 150.90	**RDKU-200-14990**	**RDKU-100-14990**	RDCU-011-01500	RDTU-031-01500	RDRY-701-00812	13
5.9409 - 5.9803	150.90 - 151.90	**RDKU-200-15090**	**RDKU-100-15090**	RDCU-011-01510	RDTU-031-01510	RDRY-701-00812	13
5.9803 - 6.0197	151.90 - 152.90	**RDKU-200-15190**	**RDKU-100-15190**	RDCU-011-01520	RDTU-031-01520	RDRY-701-00812	13
6.0197 - 6.0591	152.90 - 153.90	**RDKU-200-15290**	**RDKU-100-15290**	RDCU-011-01530	RDTU-031-01530	RDRY-701-00812	13
6.0591 - 6.0984	153.90 - 154.90	**RDKU-200-15390**	**RDKU-100-15390**	RDCU-011-01540	RDTU-031-01540	RDRY-701-00812	13
6.0984 - 6.1378	154.90 - 155.90	**RDKU-200-15490**	**RDKU-100-15490**	RDCU-011-01550	RDTU-031-01550	RDRY-701-00812	13
6.1378 - 6.1772	155.90 - 156.90	**RDKU-200-15590**	**RDKU-100-15590**	RDCU-011-01560	RDTU-031-01560	RDRY-701-00812	13
6.1772 - 6.2165	156.90 - 157.90	**RDKU-200-15690**	**RDKU-100-15690**	RDCU-011-01570	RDTU-031-01570	RDRY-701-00812	13
6.2165 - 6.2559	157.90 - 158.90	**RDKU-200-15790**	**RDKU-100-15790**	RDCU-011-01580	RDTU-031-01580	RDRY-701-00812	13
6.2559 - 6.2953	158.90 - 159.90	**RDKU-200-15890**	**RDKU-100-15890**	RDCU-011-01590	RDTU-031-01590	RDRY-701-00812	13
6.2953 - 6.3346	159.90 - 160.90	**RDKU-200-15990**	**RDKU-100-15990**	RDCU-011-01600	RDTU-031-01600	RDRY-701-00812	13
6.3346 - 6.3740	160.90 - 161.90	**RDKU-200-16090**	**RDKU-100-16090**	RDCU-011-01610	RDTU-031-01610	RDRY-701-00812	13
6.3740 - 6.4134	161.90 - 162.90	**RDKU-200-16190**	**RDKU-100-16190**	RDCU-011-01620	RDTU-031-01620	RDRY-701-00812	13
6.4134 - 6.4528	162.90 - 163.90	**RDKU-200-16290**	**RDKU-100-16290**	RDCU-011-01630	RDTU-031-01630	RDRY-701-00812	13
6.4528 - 6.4921	163.90 - 164.90	**RDKU-200-16390**	**RDKU-100-16390**	RDCU-011-01640	RDTU-031-01640	RDRY-701-00812	13
6.4921 - 6.5315	164.90 - 165.90	**RDKU-200-16490**	**RDKU-100-16490**	RDCU-011-01650	RDTU-031-01650	RDRY-701-00812	13

NOTE: Each roller burnishing tool comes assembled complete with cage, cone, and rolls.

D: 42 - 45 | D: 40 - 41 | D: 38

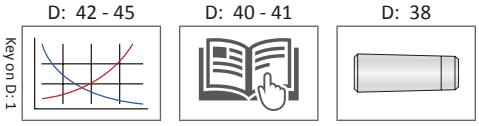

Roller Burnishing Tools | Blind Holes

U Series | Diameter Range: 5.9016" - 6.5315" (149.90mm - 165.90mm)

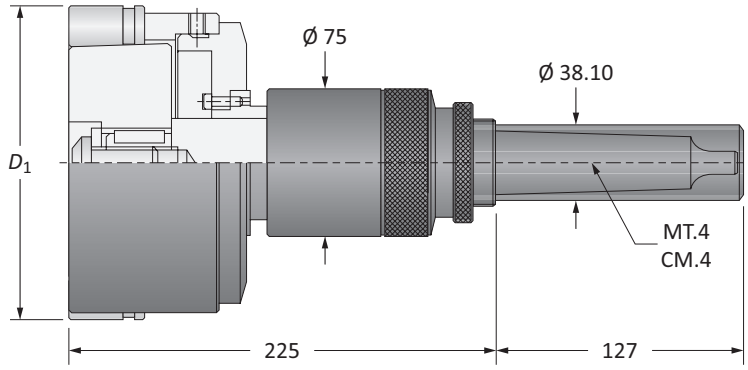

Blind Holes

D_1		Part No.*		Spare Parts			
Imperial (in)	Metric (mm)	Assembly with Morse Taper Shank	Assembly with Straight Shank	Cage	Cone**	Rolls	Qty Rolls
5.9016 - 5.9409	149.90 - 150.90	**RSKU-200-xxxxx**	**RSKU-100-xxxxx**	RSCU-015-01500	RSTU-0xx-01500	RSRY-708-00812	13
5.9409 - 5.9803	150.90 - 151.90	**RSKU-200-xxxxx**	**RSKU-100-xxxxx**	RSCU-015-01510	RSTU-0xx-01510	RSRY-708-00812	13
5.9803 - 6.0197	151.90 - 152.90	**RSKU-200-xxxxx**	**RSKU-100-xxxxx**	RSCU-015-01520	RSTU-0xx-01520	RSRY-708-00812	13
6.0197 - 6.0591	152.90 - 153.90	**RSKU-200-xxxxx**	**RSKU-100-xxxxx**	RSCU-015-01530	RSTU-0xx-01530	RSRY-708-00812	13
6.0591 - 6.0984	153.90 - 154.90	**RSKU-200-xxxxx**	**RSKU-100-xxxxx**	RSCU-015-01540	RSTU-0xx-01540	RSRY-708-00812	13
6.0984 - 6.1378	154.90 - 155.90	**RSKU-200-xxxxx**	**RSKU-100-xxxxx**	RSCU-015-01550	RSTU-0xx-01550	RSRY-708-00812	13
6.1378 - 6.1772	155.90 - 156.90	**RSKU-200-xxxxx**	**RSKU-100-xxxxx**	RSCU-015-01560	RSTU-0xx-01560	RSRY-708-00812	13
6.1772 - 6.2165	156.90 - 157.90	**RSKU-200-xxxxx**	**RSKU-100-xxxxx**	RSCU-015-01570	RSTU-0xx-01570	RSRY-708-00812	13
6.2165 - 6.2559	157.90 - 158.90	**RSKU-200-xxxxx**	**RSKU-100-xxxxx**	RSCU-015-01580	RSTU-0xx-01580	RSRY-708-00812	13
6.2559 - 6.2953	158.90 - 159.90	**RSKU-200-xxxxx**	**RSKU-100-xxxxx**	RSCU-015-01590	RSTU-0xx-01590	RSRY-708-00812	13
6.2953 - 6.3346	159.90 - 160.90	**RSKU-200-xxxxx**	**RSKU-100-xxxxx**	RSCU-015-01600	RSTU-0xx-01600	RSRY-708-00812	13
6.3346 - 6.3740	160.90 - 161.90	**RSKU-200-xxxxx**	**RSKU-100-xxxxx**	RSCU-015-01610	RSTU-0xx-01610	RSRY-708-00812	13
6.3740 - 6.4134	161.90 - 162.90	**RSKU-200-xxxxx**	**RSKU-100-xxxxx**	RSCU-015-01620	RSTU-0xx-01620	RSRY-708-00812	13
6.4134 - 6.4528	162.90 - 163.90	**RSKU-200-xxxxx**	**RSKU-100-xxxxx**	RSCU-015-01630	RSTU-0xx-01630	RSRY-708-00812	13
6.4528 - 6.4921	163.90 - 164.90	**RSKU-200-xxxxx**	**RSKU-100-xxxxx**	RSCU-015-01640	RSTU-0xx-01640	RSRY-708-00812	13
6.4921 - 6.5315	164.90 - 165.90	**RSKU-200-xxxxx**	**RSKU-100-xxxxx**	RSCU-015-01650	RSTU-0xx-01650	RSRY-708-00812	13

*xxxxx = Indicate to 2 metric decimal places the size to be burnished (e.g. roller burnisher Ø 160.00mm with MT.4 shank: RSKU-200-16000).
**x = A number that will vary from 2 to 8 depending upon the exact diameter to be burnished. See page D: 6 for the correct identification of the "x" value.
NOTE: Each roller burnishing tool comes assembled complete with cage, cone, and rolls.

D: 42 - 45
D: 40 - 41
D: 39
Key on D: 1

Rolls

Through Holes

Rolls 704 and 707

Part No.	Imperial (in) D	Imperial (in) L	Metric (mm) D	Metric (mm) L
RDRY-704-00047	0.0465	0.2500	1.18	6.35
RDRY-704-00062	0.0618	0.2500	1.57	6.35
RDRY-704-00070	0.0697	0.3126	1.77	7.94
RDRY-704-00078	0.0776	0.3752	1.97	9.53
RDRY-704-00086	0.0854	0.3752	2.17	9.53
RDRY-704-00093	0.0929	0.3752	2.36	9.53
RDRY-704-00109	0.1083	0.5000	2.75	12.70
RDRY-704-00125	0.1244	0.5000	3.16	12.70
RDRY-704-00148	0.1472	0.5000	3.74	12.70
RDRY-704-00156	0.1555	0.5000	3.95	12.70
RDRY-704-00172	0.1709	0.6252	4.34	15.88
RDRY-704-00187	0.1858	0.8772	4.72	22.28
RDRY-707-00187	0.1870	0.5000	4.75	12.70
RDRY-704-00218	0.2173	0.5000	5.52	12.70
RDRY-707-00218	0.2173	1.0000	5.52	25.40
RDRY-704-00265	0.2638	1.1252	6.70	28.58
RDRY-704-00312	0.3110	1.5000	7.90	38.10
RDRY-707-00312	0.3118	1.1252	7.92	28.58
RDRY-704-00406	0.4047	1.5000	10.28	38.10
RDRY-704-00468	0.4669	1.5000	11.86	38.10
RDRY-704-00531	0.5299	1.5000	13.46	38.10
RDRY-704-00625	0.6240	1.5000	15.85	38.10
RDRY-704-00687	0.6858	1.5000	17.42	38.10
RDRY-704-00812	0.8110	1.5000	20.60	38.10

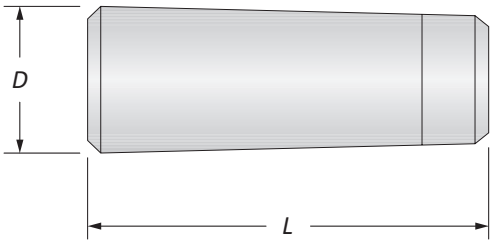

Rolls 701

Part No.	Imperial (in) D	Imperial (in) L	Metric (mm) D	Metric (mm) L
RDRY-701-00187	0.1831	0.8772	4.65	22.28
RDRY-701-00218	0.2138	1.0000	5.43	25.40
RDRY-701-00265	0.2610	1.1252	6.63	28.58
RDRY-701-00312	0.3039	1.5000	7.72	38.10
RDRY-701-00406	0.3980	1.5000	10.11	38.10
RDRY-701-00468	0.4598	1.5000	11.68	38.10
RDRY-701-00531	0.5228	1.5000	13.28	38.10
RDRY-701-00625	0.6169	1.5000	15.67	38.10
RDRY-701-00687	0.6799	1.5000	17.27	38.10
RDRY-701-00812	0.8039	1.5000	20.42	38.10

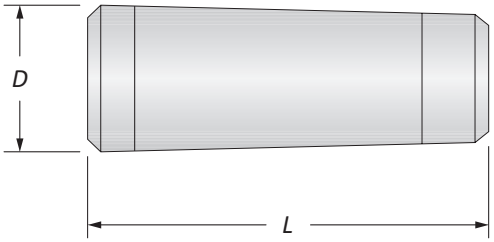

Rolls

Blind Holes

Rolls 708

Part No.	Imperial (in)		Metric (mm)	
	D	*L*	*D*	*L*
RSRY-708-00086	0.0854	0.3752	2.17	9.53
RSRY-708-00125	0.1244	0.5000	3.16	12.70
RSRY-708-00156	0.1555	0.5000	3.95	12.70
RSRY-708-00172	0.1709	0.6252	4.35	15.88
RSRY-708-00187	0.1858	0.8772	4.72	22.28
RSRY-708-00218	0.2173	0.5000	5.52	25.40
RSRY-708-00265	0.2638	1.1252	6.70	28.58
RSRY-708-00312	0.3110	1.5000	7.90	38.10
RSRY-708-00406	0.4047	1.5000	10.29	38.10
RSRY-708-00468	0.4669	1.5000	11.86	38.10
RSRY-708-00531	0.5299	1.5000	13.46	38.10
RSRY-708-00625	0.6240	1.5000	15.85	38.10
RSRY-708-00687	0.6858	1.5000	17.42	38.10
RSRY-708-00812	0.8110	1.5000	20.60	38.10

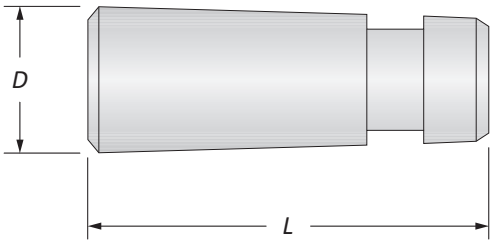

Diameter Adjustment

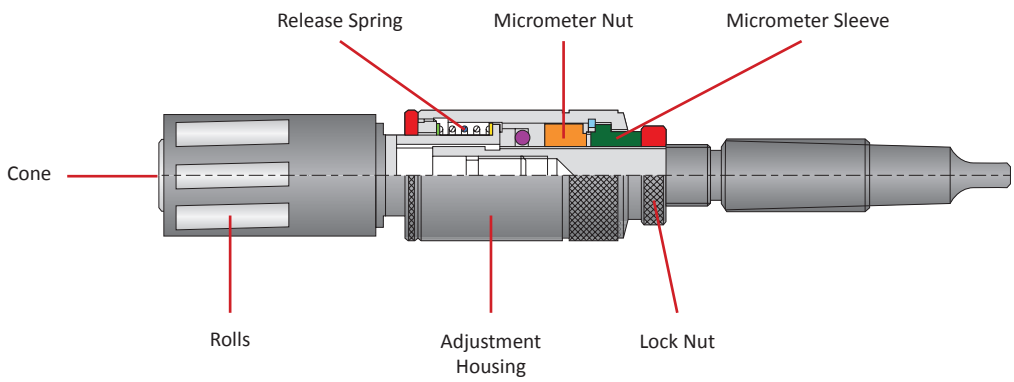

Adjustment

The roller burnishing tool incorporates a shank, a body, and a planetary system of conical rolls that are evenly spaced by a retaining cage.

1. Unscrew the lock nut.
2. Pull the housing toward the lock nut and rotate to increase or decrease the diameter.
3. Tighten the lock nut.

IMPORTANT: As you increase the diameter, the cone moves forward, pushing the rolls outward. Because of this, the cone will protrude from the end of the cage, decreasing the clearance available in blind holes (see Figures 1 and 2).

Refer to chart below for clearance values.

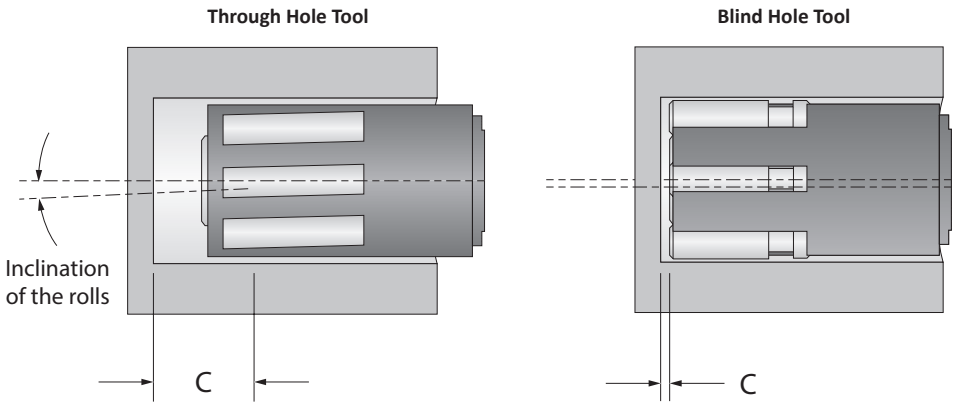

Larger Diameter = Extruded Cone = Decreased Clearance

Adjustment Range		Clearance (C)		
		Through Holes		Blind Holes
Imperial (inch)	Metric (mm)	Rolls 701	Rolls 704 / 707	Rolls 708
0.1850 - 0.2315	4.70 - 5.88	–	2.40	–
0.2319 - 0.3728	5.89 - 9.47	–	2.40	0.60
0.3732 - 0.6236	9.48 - 15.84	–	2.40	0.60
0.6240 - 1.1236	15.85 - 28.54	5.40	3.20	1.00
1.1240 - 1.8385	28.55 - 46.70	9.50	3.20	1.00
1.8390 - 3.3386	46.71 - 84.80	9.50	4.00	1.00
3.3390 - 6.5315	84.81 - 165.90	10.30	4.70	1.00

How it Works

Roller Burnishing Tools

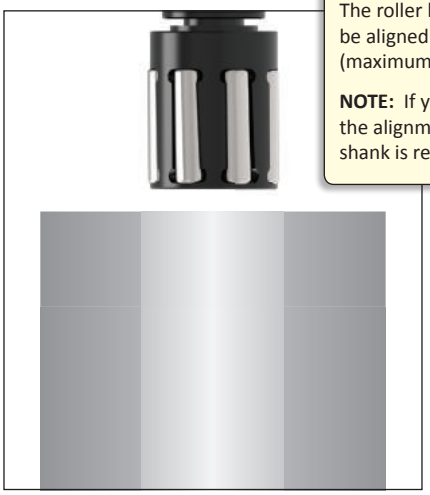

The roller burnishing tool must be aligned with the workpiece (maximum error = 0.1mm).

NOTE: If you are uncertain about the alignment error, a floating shank is recommended.

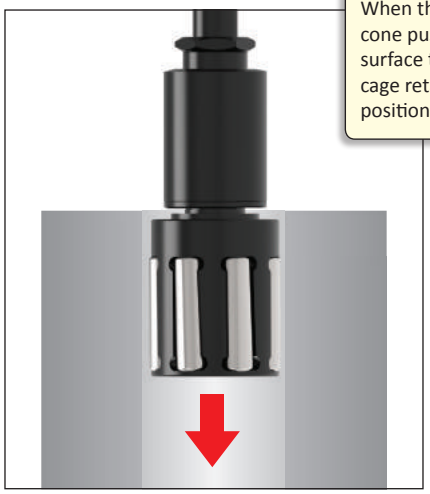

When the tool is in the hole, the cone pushes the rolls onto the surface to be burnished. The cage retains the rolls in an angled position to the axis of the tool.

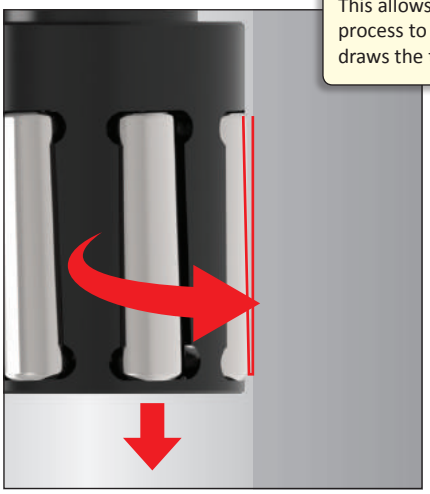

This allows the pressure of the process to generate a self-feed that draws the tool into the hole.

NOTE: When self-feed is not required (blind hole applications), you must use a cage that holds the rolls parallel with the axis of the tool.

If the machine feed is stopped or slower than the natural rate, the rolls pull the cage (held in position by the release spring) and then release from the surface of the hole.

When retracting the tool, the release spring ensures the cage is withdrawn from the cone, which removes pressure from the rolls. This allows the tool to be retracted at a high feed rate.

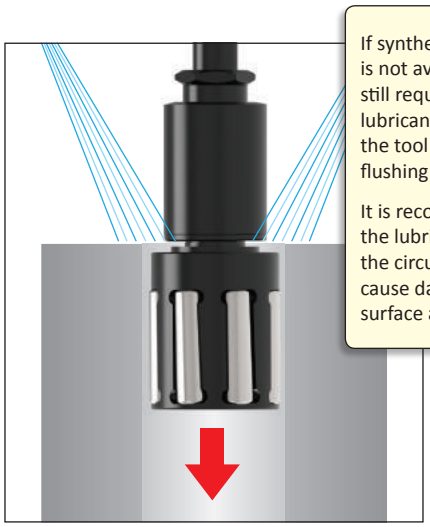

If synthetic or water soluble coolant is not available, a lubrication is still required. A plentiful supply of lubricant must be fed directly to the tool in order to provide a good flushing and cleaning action.

It is recommended to fit a filter to the lubrication system to prevent the circulation of chips, which may cause damage to the burnished surface and/or the tool.

Recommended Cutting Data | Imperial (inch)

Roller Burnishing

ISO	Material	Hardness (BHN)	Speed (SFM)	Recommended Feed (IPR) by Burnisher Diameter			
				0.1850 - 0.4724	0.4725 - 0.9843	0.9844 - 1.9685	1.9686 - 6.5315
P	**Free Machining Steel**	100 - 180	75 - 300	0.005 - 0.020	0.014 - 0.037	0.032 - 0.086	0.070 - 0.121
	1118, 1215, 12L14, etc.	180 - 250	75 - 300	0.005 - 0.020	0.014 - 0.037	0.032 - 0.086	0.070 - 0.121
	Low Carbon Steel	85 - 180	75 - 300	0.005 - 0.020	0.014 - 0.037	0.032 - 0.086	0.070 - 0.121
	1010, 1020, 1025, 1522, 1144, etc.	180 - 275	75 - 300	0.005 - 0.020	0.014 - 0.037	0.032 - 0.086	0.070 - 0.121
	Medium Carbon Steel	125 - 180	75 - 300	0.005 - 0.020	0.014 - 0.037	0.032 - 0.086	0.070 - 0.121
	1030, 1040, 1050, 1527, 1140, 1151, etc.	180 - 325	75 - 300	0.005 - 0.020	0.014 - 0.037	0.032 - 0.086	0.070 - 0.121
	Alloy Steel	125 - 180	75 - 300	0.005 - 0.020	0.014 - 0.037	0.032 - 0.086	0.070 - 0.121
	4140, 5140, 8640, etc.	180 - 375	75 - 300	0.005 - 0.020	0.014 - 0.037	0.032 - 0.086	0.070 - 0.121
	High Strength Alloy 4340, 4330V, 300M, etc.	240 - 450	75 - 300	0.005 - 0.020	0.014 - 0.037	0.032 - 0.086	0.070 - 0.121
	Structural Steel	125 - 180	75 - 300	0.005 - 0.020	0.014 - 0.037	0.032 - 0.086	0.070 - 0.121
	A36, A285, A516, etc.	180 - 350	75 - 300	0.005 - 0.020	0.014 - 0.037	0.032 - 0.086	0.070 - 0.121
	Tool Steel	150 - 200	75 - 300	0.005 - 0.020	0.014 - 0.037	0.032 - 0.086	0.070 - 0.121
	H-13, H-21, A-4, 0-2, S-3, etc.	200 - 250	75 - 300	0.005 - 0.020	0.014 - 0.037	0.032 - 0.086	0.070 - 0.121
S	**High Temp Alloy** Hastelloy B, Inconel 600, etc.	140 - 310	50 - 150	0.005 - 0.020	0.014 - 0.037	0.032 - 0.086	0.070 - 0.121
	Titanium Alloy	140 - 310	50 - 150	0.005 - 0.020	0.014 - 0.037	0.032 - 0.086	0.070 - 0.121
M	**Stainless Steel 400 Series** 416, 420, etc.	135 - 350	75 - 200	0.005 - 0.020	0.014 - 0.037	0.032 - 0.086	0.070 - 0.121
	Stainless Steel 300 Series 304, 316, 17-4PH, etc.	135 - 275	75 - 200	0.005 - 0.020	0.014 - 0.037	0.032 - 0.086	0.070 - 0.121
K	**Grey Cast Iron, Ductile Iron,**	< 200	75 - 300	0.005 - 0.020	0.014 - 0.037	0.032 - 0.086	0.070 - 0.121
	Spheroidal Cast Iron (Pearlitic)	> 200	75 - 300	0.005 - 0.020	0.014 - 0.037	0.032 - 0.086	0.070 - 0.121
	Spheroidal Cast Iron (Ferritic)	260 - 320	75 - 300	0.005 - 0.020	0.014 - 0.037	0.032 - 0.086	0.070 - 0.121
N	**Copper and Alloys Brass**	< 500	150 - 350	0.005 - 0.020	0.014 - 0.037	0.032 - 0.086	0.070 - 0.121
	Bronze Bronze Phosphorous	< 180	150 - 350	0.005 - 0.020	0.014 - 0.037	0.032 - 0.086	0.070 - 0.121
	Aluminum and Alloys	< 150	150 - 350	0.005 - 0.020	0.014 - 0.037	0.032 - 0.086	0.070 - 0.121

Max RPM

Series	Max RPM
H	2000
I	1500
K	1200
L	1000
F	1000
M	900
N	900
O	700
P	600
Q	500
R	300
S	300
T	250
U	200

IMPORTANT: The speeds and feeds listed on these pages are a general starting point for all applications. Factory technical assistance is available through our Application Engineering department.

Stock Allowance | Imperial (inch)

Roller Burnishing

ISO	Material	Hardness (BHN)	Recommended Stock (inch) by Burnisher Diameter*			
			0.1850 - 0.4724	0.4725 - 0.9843	0.9844 - 1.9685	1.9686 - 6.5315
P	**Free Machining Steel**	100 - 180	0.0004 - 0.0007	0.0007 - 0.0016	0.0010 - 0.0018	0.0012 - 0.0020
	1118, 1215, 12L14, etc.	180 - 250	0.0004 - 0.0007	0.0007 - 0.0016	0.0010 - 0.0018	0.0012 - 0.0020
	Low Carbon Steel	85 - 180	0.0004 - 0.0007	0.0007 - 0.0016	0.0010 - 0.0018	0.0012 - 0.0020
	1010, 1020, 1025, 1522, 1144, etc.	180 - 275	0.0004 - 0.0007	0.0007 - 0.0016	0.0010 - 0.0018	0.0012 - 0.0020
	Medium Carbon Steel	125 - 180	0.0004 - 0.0007	0.0007 - 0.0016	0.0010 - 0.0018	0.0012 - 0.0020
	1030, 1040, 1050, 1527, 1140, 1151, etc.	180 - 325	0.0004 - 0.0007	0.0005 - 0.0007	0.0005 - 0.0010	0.0008 - 0.0014
	Alloy Steel	125 - 180	0.0004 - 0.0007	0.0007 - 0.0016	0.0010 - 0.0018	0.0012 - 0.0020
	4140, 5140, 8640, etc.	180 - 375	0.0004 - 0.0007	0.0005 - 0.0007	0.0005 - 0.0010	0.0008 - 0.0014
	High Strength Alloy 4340, 4330V, 300M, etc.	240 - 450	0.0004 - 0.0007	0.0005 - 0.0007	0.0005 - 0.0010	0.0008 - 0.0014
	Structural Steel	125 - 180	0.0004 - 0.0007	0.0007 - 0.0016	0.0010 - 0.0018	0.0012 - 0.0020
	A36, A285, A516, etc.	180 - 350	0.0004 - 0.0007	0.0005 - 0.0007	0.0005 - 0.0010	0.0008 - 0.0014
	Tool Steel	150 - 200	0.0004 - 0.0007	0.0007 - 0.0016	0.0010 - 0.0018	0.0012 - 0.0020
	H-13, H-21, A-4, 0-2, S-3, etc.	200 - 250	0.0004 - 0.0007	0.0005 - 0.0007	0.0005 - 0.0010	0.0008 - 0.0014
S	**High Temp Alloy** Hastelloy B, Inconel 600, etc.	140 - 310	0.0004 - 0.0007	0.0005 - 0.0007	0.0005 - 0.0010	0.0008 - 0.0014
	Titanium Alloy	140 - 310	0.0004 - 0.0007	0.0005 - 0.0007	0.0005 - 0.0010	0.0008 - 0.0014
M	**Stainless Steel 400 Series** 416, 420, etc.	135 - 350	0.0004 - 0.0007	0.0007 - 0.0016	0.0010 - 0.0018	0.0012 - 0.0020
	Stainless Steel 300 Series 304, 316, 17-4PH, etc.	135 - 275	0.0004 - 0.0007	0.0007 - 0.0016	0.0010 - 0.0018	0.0012 - 0.0020
K	**Grey Cast Iron, Ductile Iron,**	< 200	0.0004 - 0.0007	0.0005 - 0.0007	0.0005 - 0.0010	0.0008 - 0.0014
	Spheroidal Cast Iron (Pearlitic)	> 200	0.0004 - 0.0007	0.0005 - 0.0007	0.0005 - 0.0010	0.0008 - 0.0014
	Spheroidal Cast Iron (Ferritic)	260 - 320	0.0004 - 0.0007	0.0005 - 0.0007	0.0005 - 0.0010	0.0008 - 0.0014
N	**Copper and Alloys** **Brass**	< 500	0.0004 - 0.0007	0.0007 - 0.0016	0.0010 - 0.0018	0.0012 - 0.0020
	Bronze **Bronze Phosphorous**	< 180	0.0004 - 0.0007	0.0007 - 0.0016	0.0010 - 0.0018	0.0012 - 0.0020
	Aluminum and Alloys	< 150	0.0004 - 0.0007	0.0007 - 0.0016	0.0010 - 0.0018	0.0012 - 0.0020

*Stock value is on diameter.

Recommended Cutting Data | Metric (mm)

Roller Burnishing

ISO	Material	Hardness (BHN)	Speed (M/min)	Recommended Feed (mm/rev) by Burnisher Diameter			
				4.70 - 12.00	12.01 - 25.00	25.01 - 50.00	50.01 - 165.90
P	**Free Machining Steel**	100 - 180	22 - 90	0.13 - 0.51	0.36 - 0.94	0.81 - 2.18	1.78 - 3.07
	1118, 1215, 12L14, etc.	180 - 250	22 - 90	0.13 - 0.51	0.36 - 0.94	0.81 - 2.18	1.78 - 3.07
	Low Carbon Steel	85 - 180	22 - 90	0.13 - 0.51	0.36 - 0.94	0.81 - 2.18	1.78 - 3.07
	1010, 1020, 1025, 1522, 1144, etc.	180 - 275	22 - 90	0.13 - 0.51	0.36 - 0.94	0.81 - 2.18	1.78 - 3.07
	Medium Carbon Steel	125 - 180	22 - 90	0.13 - 0.51	0.36 - 0.94	0.81 - 2.18	1.78 - 3.07
	1030, 1040, 1050, 1527, 1140, 1151, etc.	180 - 325	22 - 90	0.13 - 0.51	0.36 - 0.94	0.81 - 2.18	1.78 - 3.07
	Alloy Steel	125 - 180	22 - 90	0.13 - 0.51	0.36 - 0.94	0.81 - 2.18	1.78 - 3.07
	4140, 5140, 8640, etc.	180 - 375	22 - 90	0.13 - 0.51	0.36 - 0.94	0.81 - 2.18	1.78 - 3.07
	High Strength Alloy 4340, 4330V, 300M, etc.	240 - 450	22 - 90	0.13 - 0.51	0.36 - 0.94	0.81 - 2.18	1.78 - 3.07
	Structural Steel	125 - 180	22 - 90	0.13 - 0.51	0.36 - 0.94	0.81 - 2.18	1.78 - 3.07
	A36, A285, A516, etc.	180 - 350	22 - 90	0.13 - 0.51	0.36 - 0.94	0.81 - 2.18	1.78 - 3.07
	Tool Steel	150 - 200	22 - 90	0.13 - 0.51	0.36 - 0.94	0.81 - 2.18	1.78 - 3.07
	H-13, H-21, A-4, 0-2, S-3, etc.	200 - 250	22 - 90	0.13 - 0.51	0.36 - 0.94	0.81 - 2.18	1.78 - 3.07
S	**High Temp Alloy** Hastelloy B, Inconel 600, etc.	140 - 310	15 - 45	0.13 - 0.51	0.36 - 0.94	0.81 - 2.18	1.78 - 3.07
	Titanium Alloy	140 - 310	15 - 45	0.13 - 0.51	0.36 - 0.94	0.81 - 2.18	1.78 - 3.07
M	**Stainless Steel 400 Series** 416, 420, etc.	135 - 350	22 - 60	0.13 - 0.51	0.36 - 0.94	0.81 - 2.18	1.78 - 3.07
	Stainless Steel 300 Series 304, 316, 17-4PH, etc.	135 - 275	22 - 60	0.13 - 0.51	0.36 - 0.94	0.81 - 2.18	1.78 - 3.07
K	**Grey Cast Iron, Ductile Iron,**	< 200	22 - 90	0.13 - 0.51	0.36 - 0.94	0.81 - 2.18	1.78 - 3.07
	Spheroidal Cast Iron (Pearlitic)	> 200	22 - 90	0.13 - 0.51	0.36 - 0.94	0.81 - 2.18	1.78 - 3.07
	Spheroidal Cast Iron (Ferritic)	260 - 320	22 - 90	0.13 - 0.51	0.36 - 0.94	0.81 - 2.18	1.78 - 3.07
N	**Copper and Alloys Brass**	< 500	45 - 105	0.13 - 0.51	0.36 - 0.94	0.81 - 2.18	1.78 - 3.07
	Bronze Bronze Phosphorous	< 180	45 - 105	0.13 - 0.51	0.36 - 0.94	0.81 - 2.18	1.78 - 3.07
	Aluminum and Alloys	< 150	45 - 105	0.13 - 0.51	0.36 - 0.94	0.81 - 2.18	1.78 - 3.07

Max RPM

Series	Max RPM
H	2000
I	1500
K	1200
L	1000
F	1000
M	900
N	900
O	700
P	600
Q	500
R	300
S	300
T	250
U	200

IMPORTANT: The speeds and feeds listed on these pages are a general starting point for all applications. Factory technical assistance is available through our Application Engineering department.

Stock Allowance | Metric (mm)

Roller Burnishing

ISO	Material	Hardness (BHN)	Recommended Stock (mm) by Burnisher Diameter* 4.70 - 12.00	12.01 - 25.00	25.01 - 50.00	50.01 - 165.90
P	**Free Machining Steel**	100 - 180	0.010 - 0.018	0.018 - 0.041	0.025 - 0.046	0.030 - 0.051
	1118, 1215, 12L14, etc.	180 - 250	0.010 - 0.018	0.018 - 0.041	0.025 - 0.046	0.030 - 0.051
	Low Carbon Steel	85 - 180	0.010 - 0.018	0.018 - 0.041	0.025 - 0.046	0.030 - 0.051
	1010, 1020, 1025, 1522, 1144, etc.	180 - 275	0.010 - 0.018	0.018 - 0.041	0.025 - 0.046	0.030 - 0.051
	Medium Carbon Steel	125 - 180	0.010 - 0.018	0.018 - 0.041	0.025 - 0.046	0.030 - 0.051
	1030, 1040, 1050, 1527, 1140, 1151, etc.	180 - 325	0.010 - 0.018	0.012 - 0.018	0.012 - 0.025	0.020 - 0.036
	Alloy Steel	125 - 180	0.010 - 0.018	0.018 - 0.041	0.025 - 0.046	0.030 - 0.051
	4140, 5140, 8640, etc.	180 - 375	0.010 - 0.018	0.012 - 0.018	0.012 - 0.025	0.020 - 0.036
	High Strength Alloy 4340, 4330V, 300M, etc.	240 - 450	0.010 - 0.018	0.012 - 0.018	0.012 - 0.025	0.020 - 0.036
	Structural Steel	125 - 180	0.010 - 0.018	0.018 - 0.041	0.025 - 0.046	0.030 - 0.051
	A36, A285, A516, etc.	180 - 350	0.010 - 0.018	0.012 - 0.018	0.012 - 0.025	0.020 - 0.036
	Tool Steel	150 - 200	0.010 - 0.018	0.018 - 0.041	0.025 - 0.046	0.030 - 0.051
	H-13, H-21, A-4, 0-2, S-3, etc.	200 - 250	0.010 - 0.018	0.012 - 0.018	0.012 - 0.025	0.020 - 0.036
S	**High Temp Alloy** Hastelloy B, Inconel 600, etc.	140 - 310	0.010 - 0.018	0.012 - 0.018	0.012 - 0.025	0.020 - 0.036
	Titanium Alloy	140 - 310	0.010 - 0.018	0.012 - 0.018	0.012 - 0.025	0.020 - 0.036
M	**Stainless Steel 400 Series** 416, 420, etc.	135 - 350	0.010 - 0.018	0.018 - 0.041	0.025 - 0.046	0.030 - 0.051
	Stainless Steel 300 Series 304, 316, 17-4PH, etc.	135 - 275	0.010 - 0.018	0.018 - 0.041	0.025 - 0.046	0.030 - 0.051
K	**Grey Cast Iron, Ductile Iron,**	< 200	0.010 - 0.018	0.012 - 0.018	0.012 - 0.025	0.020 - 0.036
	Spheroidal Cast Iron (Pearlitic)	> 200	0.010 - 0.018	0.012 - 0.018	0.012 - 0.025	0.020 - 0.036
	Spheroidal Cast Iron (Ferritic)	260 - 320	0.010 - 0.018	0.012 - 0.018	0.012 - 0.025	0.020 - 0.036
N	**Copper and Alloys Brass**	< 500	0.010 - 0.018	0.018 - 0.041	0.025 - 0.046	0.030 - 0.051
	Bronze Bronze Phosphorous	< 180	0.010 - 0.018	0.018 - 0.041	0.025 - 0.046	0.030 - 0.051
	Aluminum and Alloys	< 150	0.010 - 0.018	0.018 - 0.041	0.025 - 0.046	0.030 - 0.051

*Stock value is on diameter.

Notes

Notes

Notes

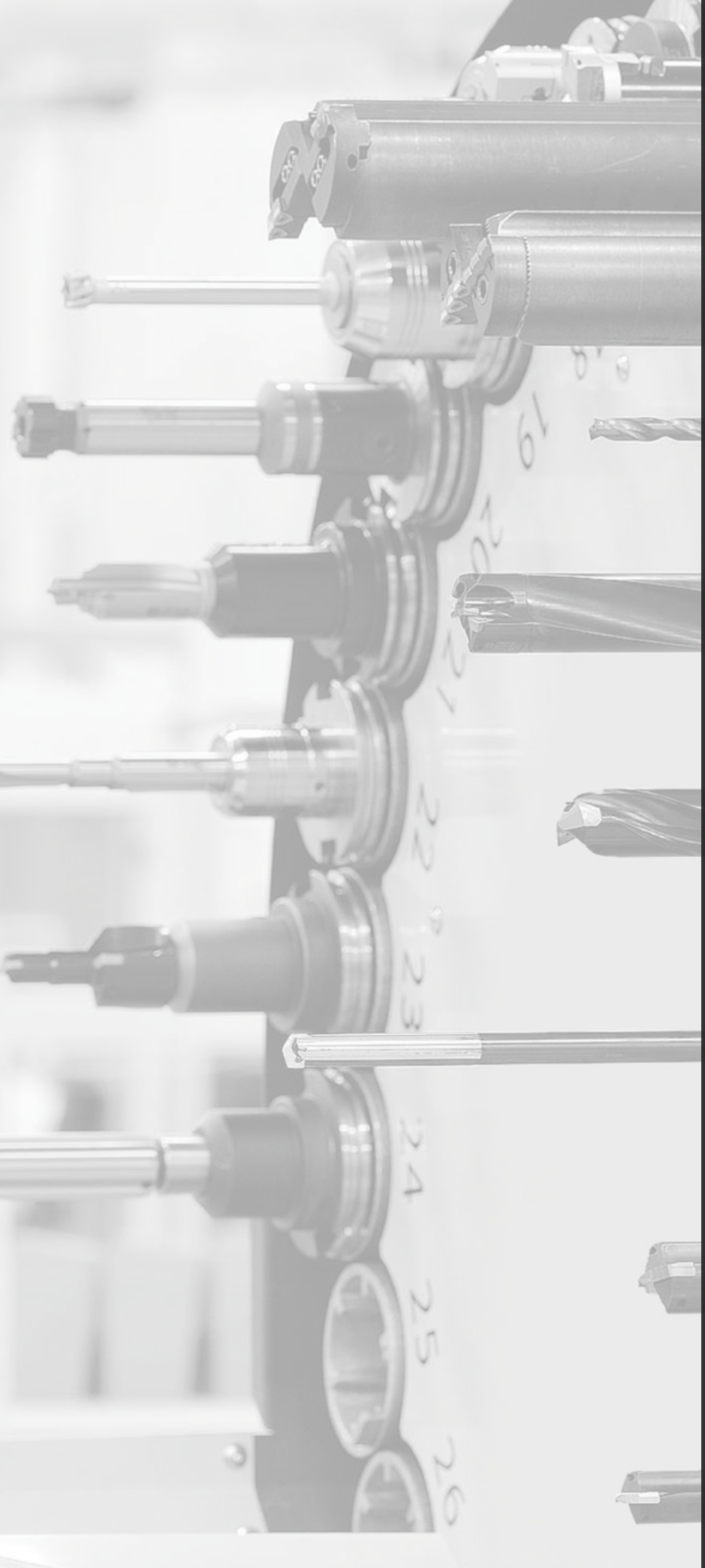

ALLIED MACHINE & ENGINEERING

Warranty Information

Allied Machine & Engineering warrants to original equipment manufacturers, distributors, industrial and commercial users of its products that each new product manufactured or supplied by Allied Machine shall be free from defects in material and workmanship.

Allied Machine's obligation under this warranty is limited to furnishing without additional charge a replacement or, at its option repairing or issuing credit for any product which shall within one year from the date of sale be returned freight prepaid to the plant designated by an Allied Machine representative and which upon inspection is determined by Allied Machine to be defective in materials or workmanship.

Complete information as to operating conditions, machine, set-up, and application of cutting fluid should accompany any product returned for inspection. The provisions of this warranty shall not apply to any Allied Machine products which have been subjected to misuse, improper operating conditions, machine set-up or application of cutting fluid or which have been repaired or altered if such repair or alteration in the judgment of Allied Machine would adversely affect performance of the product.

THIS WARRANTY IS IN LIEU OF ALL OTHER WARRANTIES, EXPRESS OR IMPLIED, INCLUDING ANY IMPLIED WARRANTY OF MERCHANTABILITY OR FITNESS FOR A PARTICULAR PURPOSE. Allied Machine shall have no liability or responsibility on any claim of any kind, whether in contract, tort or otherwise, for any loss or damage arising out of, connected with, or resulting from the manufacture, sale, delivery or use of any product sold hereunder, in excess of the cost of replacement or repair as provided herein.

ALL PRICES, DELIVERIES, DESIGNS, AND MATERIALS ARE SUBJECT TO CHANGE WITHOUT NOTICE.

Certified Management System

Allied Machine & Engineering
Registered to ISO 9001
10001329

United States

Allied Machine & Engineering
120 Deeds Drive
Dover OH 44622
United States

Phone:
+1.330.343.4283

Fax:
+1.330.602.3400

Toll Free USA and Canada:
800.321.5537

Toll Free USA and Canada:
800.223.5140

Allied Machine & Engineering
485 W Third Street
Dover OH 44622
United States

Phone:
+1.330.343.4283

Fax:
+1.330.364.7666
(Engineering Dept.)

Toll Free USA and Canada:
800.321.5537

Europe

Allied Machine & Engineering Co. (Europe) Ltd.
93 Vantage Point
Pensnett Estate
Kingswinford
West Midlands
DY6 7FR England

Phone:
+44 (0) 1384.400900

Wohlhaupter GmbH
Maybachstrasse 4
Postfach 1264
72636 Frickenhausen
Germany

Phone:
+49 (0) 7022.408.0

Fax:
+49 (0) 7022.408.212

Asia

Wohlhaupter India Pvt. Ltd.
B-23, 2nd Floor
B Block Community Centre
Janakpuri, New Delhi - 110058
India

Phone:
+91 (0) 11.41827044

Your local Allied Machine representative:

ALLIED MACHINE & ENGINEERING

www.alliedmachine.com

Allied Machine & Engineering is registered by DQS to **ISO 9001 10001329**

© 2018 Allied Machine & Engineering
Literature Order Number: AMPC-D
Publish Date: June 2018