User manual
Single roller burnishing tool
ERG-Sp. variable

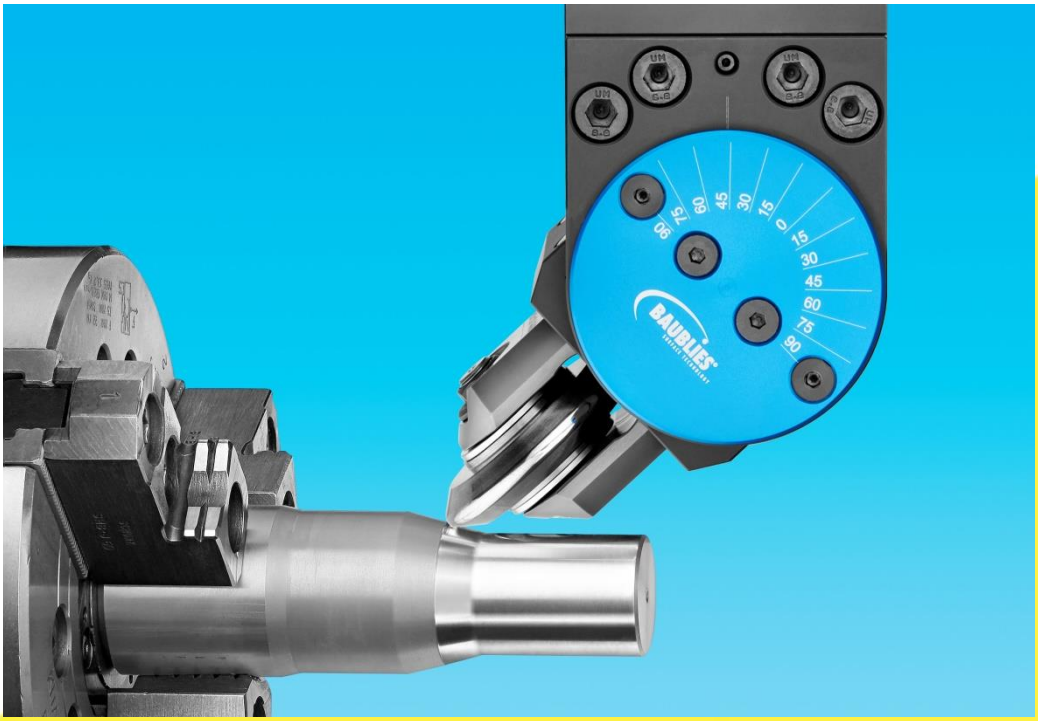

BAUBLIES®
SURFACE TECHNOLOGY

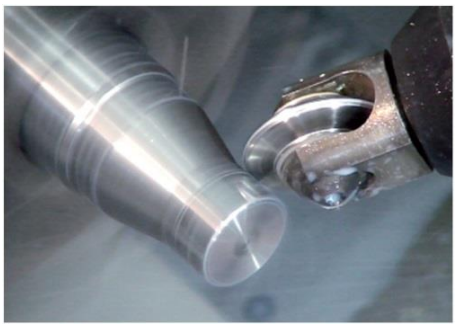

Variable single-roller burnishing tool for external use

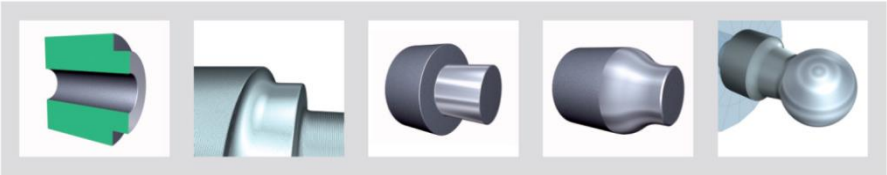

Technical details: Variable single-roller burnishing tool for external use

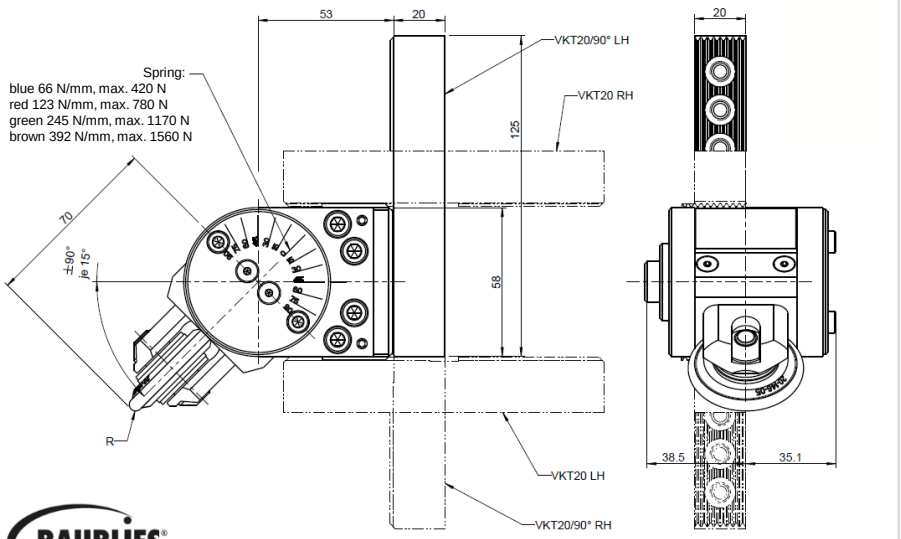

*Roll and shank must be ordered separately

Variable single-roller burnishing tools for external use
are non-intrinsic tools for smoothening and work hardening of shafts and external contours.

Advantages

- adjustable angle for various contours
- suitable for work hardening tasks
- universally useable
- spring loaded rolling unit

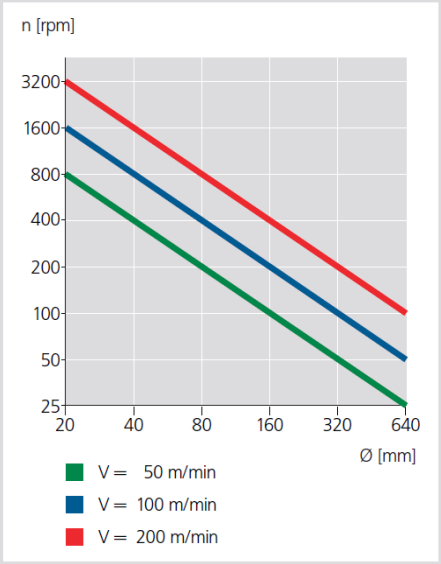

Variable single-roller burnishing tool for external use

Application	shafts and external contours, plane surfaces, cones, grooves, undercuts
Standard fixture	square shank 20/25/32/40 mm
Swiveling range	180°, Indexing 12 x 15°
Roller	radius 2 mm

Options

- Fixture VDI, HSK etc.
- Tailor made rollers

Application parameters

Please note that this information represents standard values which must be adapted to the individual cases.

Speed	up to 150 m/min
Feed rate	0.05 - 0.3 mm/rev
Workpiece allowance	up to 0.02 mm
Tool pre-load	up to 2 mm
Lubrication	emulsion or oil; filtration of the lubricant (< 40µm)can improve the surface quality and the tool life
Pre-machining of workpiece	surface roughness up to 15 µm
Workpiece hardness	up to 45 HRC

© Baublies AG · 12.2015 · GB · Subject to technical modifications.

Tool assembly and handling

Variable single-roller burnishing tool for external use

Parts list and assembly
1 Fixture
2 Holder
3 Roller fork
4 Axle
4.1 Screw nut with shim ring
5 Roller
6 Guide
7 Locking screws (2 Stück)
8 Set screw
9 Spring (including 4 several compression springs)
10 Screw nut with disc spring
11 Counter sunk screws (4 Stück)
13 Body

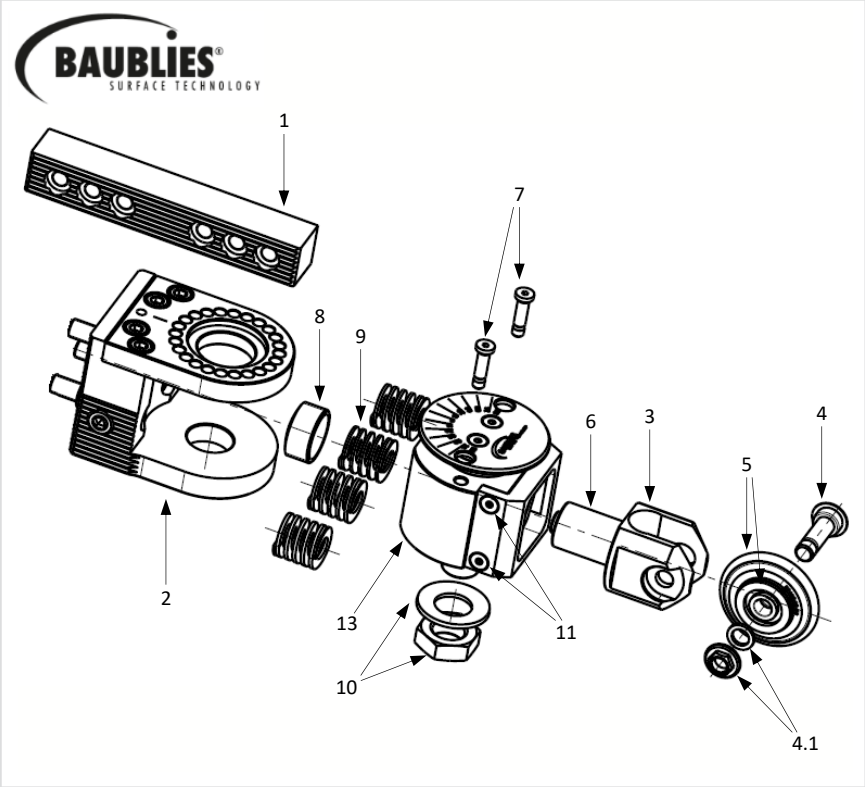

Positioning the roller:

Remove locking screws (**7**).
Loosen screw nut with disc spring (**10**) until the body (**13**) is moveable.
Adjust position of the tool in steps of 15°.
Locate the setting with locking screws and fix locking screws and screw nut.

Modifying the tool preload
(see classification force - spring deflection):

Attention!
The roller fork is spring loaded!
The counter sunk screws (**11**) must not be removed before the spring (**9**) is declamped by removing the set screw (**8**).

a) Changing the spring
(Factory setting, red spring mounted.
Including 2x1 mm discs, discs are not assembled (see classification force spring deflection).

Remove locking screws (**7**), loosen screw nut with disc spring (**10**), move body (**13**) .
Remove set screw (**8**) and change spring or disc(s)(**9**) (see classification force - spring deflection).

b) Depending on your application, choose the disc(s) and spring, see classification force - spring deflection.

Replacing components

Replacing roller:
Remove axle with nut (**4**) and screw nut with shim ring (**4.1**).
Remove roller (**5**).
Lubricate bearing with grease.
Assemble roller and axle with nut.
Pay attention to the max. torque of 2 - 2.5 Nm.

Please note:

The occuring forces can be very high!
For safety reasons always ensure a sufficient clamping of the tool on your machine.
The roller fork is spring loaded!
The counter sunk screws (**11**) must not be removed before the spring (**9**) is declamped by removing the set screw (**8**).

Tip

The preload (factory setting!) of the tool during burnishing should be in a range between 0.1 and 0.5 mm.

For the assembly of the roller there is a suitable torque wrench available.

Coolant must be used at any time.

Avoid interrupted cuts.

For a basic setting of the center height we recommend to use the rolling tool max. 0.3 mm above the center of rotation.

© Baublies AG · 12.2015 · GB · Subject to technical modifications.

Classification Force - Spring Deflection ERG-Variable

Classification Force – Spring Deflection (Factory setting spring red)

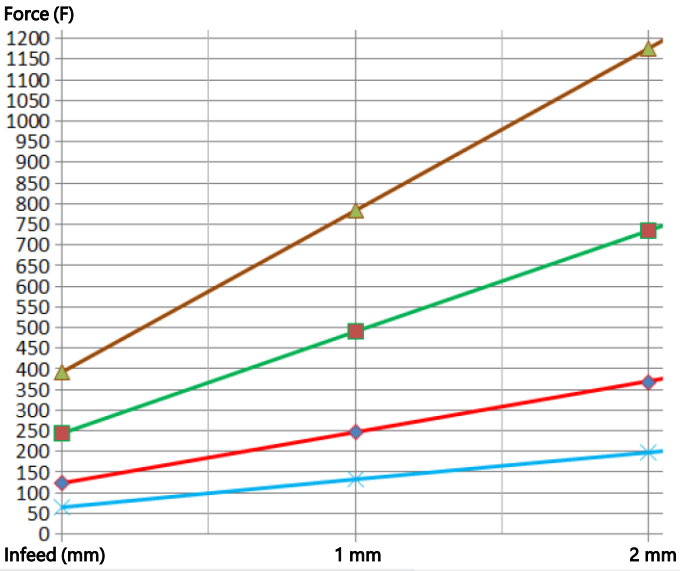

without disc	
Force	Spring
70 (N)	soft (blue)
120 (N)	medium (red)
250 (N)	hard (green)
390 (N)	very hard (brown)

Classification Force – Spring Deflection one disc = 1 mm monted

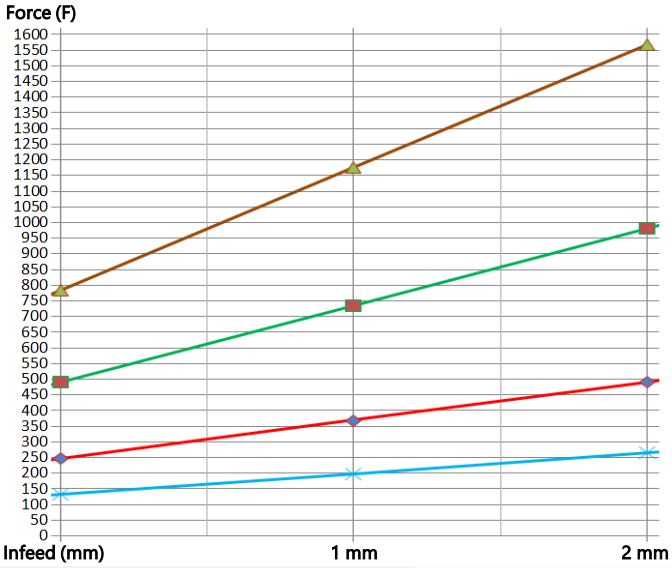

one disc = 1 mm	
Force	Spring
130 (N)	soft (blue)
250 (N)	medium (red)
490 (N)	hard (green)
790 (N)	very hard (brown)

Classification Force – Spring Deflection two discs = 2 mm monted

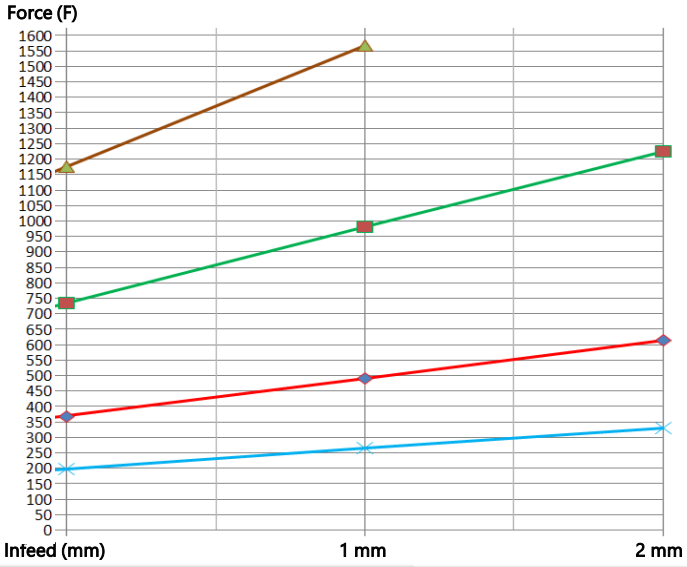

two discs = 2 mm	
Force	Spring
200 (N)	soft (blue)
370 (N)	medium (red)
740 (N)	hard (green)
1170 (N)	very hard (brown)

© Baublies AG · 12.2015 · GB · Subject to technical modifications.