ALLIED MACHINE & ENGINEERING

Holemaking Solutions for Today's Manufacturing

Drilling

Boring

Burnishing

Threading

ALVAN® Reamers

▶ *REAMING*

Finishing Solutions by S.C.A.M.I.®

Specials

S.C.A.M.I.®

North America

Allied Machine
120 Deeds Drive
Dover, OH 44622
United States

Allied Machine
485 West 3rd Street
Dover, OH 44622
United States

ThreadMills USA™
4185 Crosstowne Ct #B
Evans, GA 30809
United States

Superion™
1285 S Patton St.
Xenia, OH 45385
United States

Europe

Allied Machine Europe
93 Vantage Point
Pensnett Estate
Kingswinford
West Midlands
DY6 7FR, United Kingdom

Wohlhaupter® GmbH
Maybachstrasse 4
Postfach 1264
72636 Frickenhausen
Germany

Asia

Wohlhaupter® India
B-23, 2nd Floor
B Block Community Centre
Janakpuri, New Delhi - 110058
India

Allied Machine & Engineering is a worldwide leader in holemaking and finishing solutions. We are committed to providing practical and dependable solutions to our customers through innovative designs and superior customer and technical support.

We continue to expand our product offering in order to provide new and different solutions. With Field Sales Engineers located around the world, we position ourselves to provide technical support on site, right at your spindle.

ALLIED MACHINE & ENGINEERING®

www.alliedmachine.com

ALLIED MACHINE & ENGINEERING

Holemaking Solutions for Today's Manufacturing

ALVAN® Reamers

The Foundation

Since 1941, Allied Machine & Engineering has provided dependable and practical holemaking solutions to the world. What was once a small job shop in Ohio is now a worldwide leader in cutting tool technology. With three manufacturing facilities in Ohio, one in Georgia, another in Germany, and headquarters in both the United States and Europe, Allied Machine is positioned to bring innovative solutions and technical expertise directly to the customers' hands.

The Beginning

Harold E. Stokey founded Allied Machine & Engineering to aid the war effort, manufacturing taper bearing lock nuts for the production of M1 tanks. Years later, after a sales meeting gone wrong, Stokey possessed a warehouse stocked with spade drill inserts. He set forth into the industry that would become Allied Machine's thriving identity: holemaking.

The T-A®

When Harold's son, William H. Stokey, became the president and CEO, he developed the Throw Away, or T-A, spade drill insert system. The T-A revolutionized the holemaking industry, launching Allied Machine ahead of the competition. Since then, numerous innovations and advancements have been created from the T-A's inspiration.

The Innovation

Since the development of the T-A, Allied Machine has expanded its product offering to support a vast range of customer applications, including large diameter and deep hole drilling, boring, reaming, burnishing, porting, and threading.

The People

Allied Machine understands that high quality products are only one facet of success. Our customer support is crucial to what we do, and that's why we make sure the best engineers and customer service associates are in place to assist our customers around the world.

The Future

With over 75 years of experience, Allied Machine has encountered the challenges of growth and success. By investing in cutting edge technology and the brightest and sharpest minds, our knowledge and capabilities continue to expand and grow every day.

Steve Stokey
Executive Vice President

William H. Stokey
President and CEO

Mike Stokey
Executive Vice President

WOHLHAUPTER® ThreadMills USA SUPERION™ CRITERION™

Replaceable Insert Drills

- Reduce costs by decreasing set-up time and utilizing a single holder for the lives of multiple inserts
- Provide flexibility to quickly switch between inserts with different geometries
- Products:
  - **GEN3SYS® XT | GEN3SYS® XT Pro**
  - **Original T-A® | GEN2 T-A®**
  - **High Performance | Universal**

Indexable Insert Drills

- Protect your investment and reduce your inventory with replaceable cartridges that allow the same holder to be used repeatedly
- Indexable inserts increase productivity and tool life while reducing costs
- Products:
  - **4TEX™ Drill**
  - **Revolution Drill®**
  - **Opening Drill®**

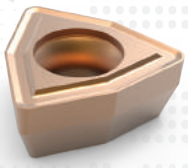

Replaceable / Indexable Insert Drills

- Allow for higher spindle speeds and take advantage of the power curve on modern CNC machines
- Achieve maximum penetration rates in deep hole drilling applications
- Holders cover a range of sizes with the replaceable heads determining the cutting diameter
- Products:
  - **APX Drill**

Solid Carbide Drills

- Offer greater strength and stability when drilling tougher materials
- Available in diameters from 3mm - 20mm
- Can be made-to-order specifically for your application (Superion™ quoted specials)
  - **ASC 320®**
  - **Superion™**

Structural Steel Solutions

- Deliver outstanding performance and durability in structural steel applications
- Designed to produce optimal results in difficult-to-machine materials
- Available in multiple lengths and diameters
- T-A® style drills have different insert geometry options to improve performance depending on material
- Products:
  - **Original T-A® | GEN2 T-A®**
  - **GEN3SYS® XT Pro**

BTA (STS) Machining Solutions

- The internal ejection system flushes chips and debris from the hole with no interference to the cutting process
- Utilizes the advantages of the T-A® drill insert
- Designed to significantly increase penetration rates over brazed heads and traditional gun drills
- Products:
  - **BT-A Drill**

Hydraulic Port Contour Cutters

- Save significant time and money by performing four processes in one step
- Replaceable insert design reduces costs, inventory, and set-up times
- Available in 4 industry specifications:
  - Imperial: SAE J-1926
  - Metric: ISO 6149-1:2006
  - Military: SAE AS5202
  - John Deere: JDS-G173.1
- Products:
  - **AccuPort 432®**

4 IN 1

Enhanced Special Drilling Capabilities

- Allied Machine Engineers are available to meet with you to evaluate your application and recommend the best solution for you
- Special drilling solutions can incorporate advanced features such as adjustable diameter locations, multiple steps, additional coolant designs, special lengths and diameters, and more
- Special drills can drastically reduce your cost-per-hole and increase your overall productivity by eliminating multiple processes and increasing tool life

WOHLHAUPTER®
High Precision Boring Systems

- Designs available for high volume applications that increase rigidity to improve performance
- Versatile boring heads that are flexible with changing applications while maintaining excellent performance
- Provides high precision with absolute repeatability to ensure every part is held to tolerance
- Offers an industry leading modular shank connection that maintains rigidity and reduces inventory on your boring system
- Available with both digital and analog settings
- Products:
  - **Wohlhaupter® Boring Tools**

CRITERION™
Modular Boring Systems

- The modular capabilities are ideal for use across multiple different projects
- Offers versatile boring heads suitable for all job shops and tooling rooms
- Provides an economical solution for low volume and/or short-term production applications
- Offers both rough and finish boring solutions
- Products:
  - **Criterion™ Boring Tools**

S.C.A.M.I.®
Expandable Reaming Solutions

- Expandable cutting diameters accommodate for wear, which extends tool life
- Replaceable cutting heads and rings reduce waste and improve production time versus solid high speed steel and carbide reamers
- Hold tight tolerances to ensure processes are performed to accurate specifications
- Reduce tooling costs because many items are available for recondition
- Products:
  - **ALVAN® Reamers**

S.C.A.M.I.®
Roller Burnishing Solutions

- Produce excellent surface finishes
- Provide accurate size control
- Increase surface hardness
- Solutions for both through hole and blind hole applications
- Products:
  - **S.C.A.M.I.® Roller Burnishing Tools**

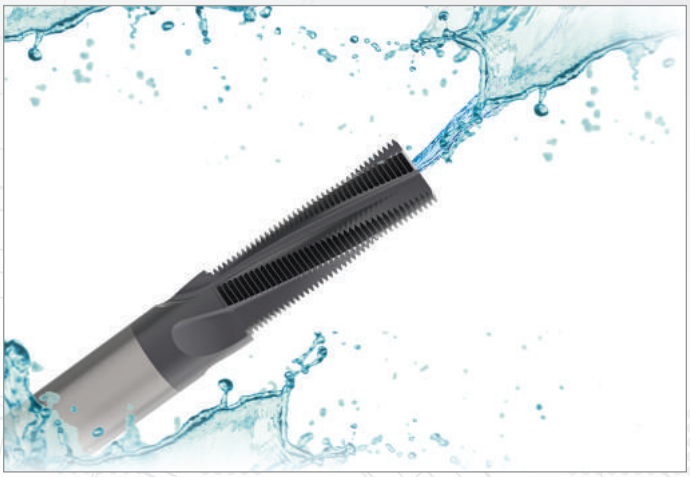

Solid Carbide Thread Mills

- Available with coolant through options
- Cover a wide range of thread forms
- Provide optimal solutions for both high production projects and short-run applications
- Products
  - **AccuThread™ 856**
  - **AccuThread™ T3**
  - **ThreadMills USA**

Replaceable Insert Thread Mills

- 3 insert lengths are available that cover a wide range of thread forms
- Holders can utilize inserts with different pitches and thread forms
- Repeatability is achieved by both the bolt-in style and the pin style locking systems
- Increase tool life by 25 - 50% with Allied Machine's AM210® coating
- Products
  - **AccuThread™ 856: Bolt-in Style**
  - **AccuThread™ 856: Pin Style**

SPECIAL CAPABILITIES

When it comes to designing and developing special solutions for customers, Allied Machine is the top choice. If your application requires special tooling, give us a call. Our engineered specials are developed by the brightest engineers in the industry. Most of our standard tooling can be altered as specials, or we can create entirely new concepts for particularly unique applications.

One special tooling solution is Insta-Quote™, the online system that allows you to design your own special tooling 24/7. Receive a quote and drawings within minutes just by following the steps.

And with the addition of Superion™ technology and capabilities, we can customize made-to-order solid carbide tools to achieve optimal results for your applications.

Whatever your application, Allied Machine has the answer.

Insta-Quote™

SUPERION™

ALVAN® Reamers

Replaceable Head Style | Monobloc Style | Cutting Ring Style

S.C.A.M.I.®

Every Option for Every Application

Allied Machine & Engineering is pleased to offer ALVAN® Reamers through an exclusive supply agreement with S.C.A.M.I.® s.n.c., an Italian manufacturer that provides high quality cutting tools.

In addition to producing close tolerances and dimensional accuracy of machined holes, these high performance reaming products provide lower costs per hole through high penetration rates, making them the ideal choice for finishing holes in a production environment. It can also prove to be an alternative to finish boring by providing more consistent hole sizes and lower cycle times.

Excellent hole tolerances	Improves hole quality and surface finish	Expandable design accommodates for wear

Applicable Industries

Aerospace | Agriculture | Automotive | Firearms | General Machining | Oil & Gas | Renewable Energy

Your safety and the safety of others is very important. This catalog contains important safety messages. Always read and follow all safety precautions.

This triangle is a safety hazard symbol. It alerts you to potential safety hazards that can cause tool failure and serious injury.

When you see this symbol in the catalog, look for a related safety message that may be near this triangle or referred to in the nearby text.

There are safety signal words also used in the catalog. Safety messages follow these words.

WARNING

WARNING (shown above) means that failure to follow the precautions in this message could result in tool failure and serious injury.

NOTICE means that failure to follow the precautions in this message could result in damage to the tool or machine but not result in personal injury.

NOTE and **IMPORTANT** are also used. These are important that you read and follow but are not safety-related.

Visit www.alliedmachine.com for the most up-to-date information and procedures.

Reference Icons
The following icons will appear throughout the catalog to help you navigate between products.

Setup / Assembly Information
Detailed instructions and information regarding the corresponding part(s)

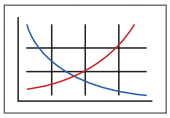

Recommended Cutting Data
Speed and feed recommendations for optimum and safe reaming

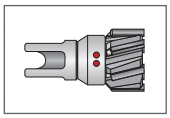

Replaceable Reamer Heads
Refers to the reamer head options that connect to the reamer mandrels

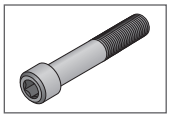

Replaceable Reamer Screws
Refers to the reamer head screw options that connect the head to the reamer mandrels

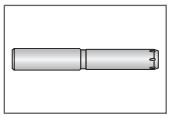

Replaceable Reamer Mandrels
Refers to the reamer mandrel options that connect with the head and screw

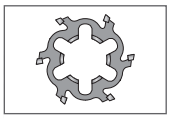

Cutting Rings
Refers to the available cutting ring options

Coolant Through Option
Indicates that the product is coolant through

S.C.A.M.I.®

Allied Machine & Engineering offers ALVAN® Reamers through an exclusive supply agreement with S.C.A.M.I.® s.n.c.

S.C.A.M.I. is an Italian manufacturer that has been producing high quality cutting tools for over 40 years. In addition to producing close tolerances and dimensional accuracy of machined holes, this high performance reaming product provides a lower cost-per-hole through its high penetration rates. This makes the ALVAN Reamer product line an ideal choice for finishing holes in a production environment. It can also prove to be an alternative to finish boring by providing more consistent hole sizes and lower cycle times.

Visit www.alliedmachine.com for additional information about all Allied Machine products, or contact our Application Engineering department for technical assistance.

ALVAN® Reamers Contents

Introduction Information

Case Study Example 2
Reconditioning Service 3
Reaming Overview and Selection . . . . . 4 - 7
Lead-ins, Coatings, Materials, and Dimples . . . . . 8 - 9

Replaceable Head Reamers

Product Overview 10
Product Nomenclature 11
Heads . . . . . 12 - 13
Screws . . . . . 14 - 15
Mandrels . . . . . 16 - 19

Monobloc Reamers

Product Overview 20
Product Nomenclature 21
Monobloc Reamers . . . . . 22 - 29

Ring Style Reamers

Product Overview 30
Product Nomenclature 31
Cutting Rings . . . . . 32 - 33
Mandrels . . . . . 34 - 53

Shanks

Radial Adjusting Shanks . . . . . 54 - 59
Radial Adjusting Adapters . . . . . 60 - 61

Recommended Cutting Data

Imperial (inch)
- Replaceable Head Style . . . . . 62 - 63
- Monobloc Style . . . . . 64 - 65
- Cutting Ring Style . . . . . 66 - 67

Metric (mm)
- Replaceable Head Style . . . . . 68 - 69
- Monobloc Style . . . . . 70 - 71
- Cutting Ring Style . . . . . 72 - 73

Technical Information

Set-up: Replaceable Head Style 74
Set-up: Monobloc Style 75
Set-up: Cutting Ring Style 76
Diameter Measurement 77
TIR Measurement and Adjustment . . . . . 78 - 79
Troubleshooting Guide 80

Case Study Example

CASE STUDY

Project Profile:	Grey Cast Iron Hydraulic Transmission Component
Tooling Solution:	ALVAN® Reamer - Monobloc Style

The Problem:

Previously, the customer was using a competitor boring tool running at the following parameters:

- 3802 RPM
- 500 SFM
- 0.003 IPR
- 11.41 IPM

With 2 passes, the tool made a 0.5023” diameter hole to a 1.20” depth.

- Cycle time = 12.6 seconds
- Tool life = 75 parts

Seeking to streamline the production process, the customer needed to increase tool life and lower the cost of production.

The Solution:

Allied Machine recommended the ALVAN® monobloc style reamer.

- **Reamer** = 92440 series carbide, uncoated, V lead

The tool ran at the following parameters:

- 2200 RPM
- 289 SFM
- 0.019 IPR
- 41.80 IPM

The tool achieved the desired diameter and depth, and the results achieved the customer’s goals.

- Cycle time = 1.7 seconds
- Tool life = 3,176 parts

The Advantages:

The customer was able to lower the cost of production and increase the tool life.

- Reduced cycle time ***from 12.6 seconds to 1.7 seconds***
- Increased tool life ***from 75 parts to an incredible 3,176 parts***
- Total cost savings = **$2,407 (or 52%)**

The **PROOF** is in the **NUMBERS**

Tool Life: Competitor Boring
(number of parts = 75)

Tool Life: ALVAN® Monobloc Style Reamer
(number of parts = 3,176)

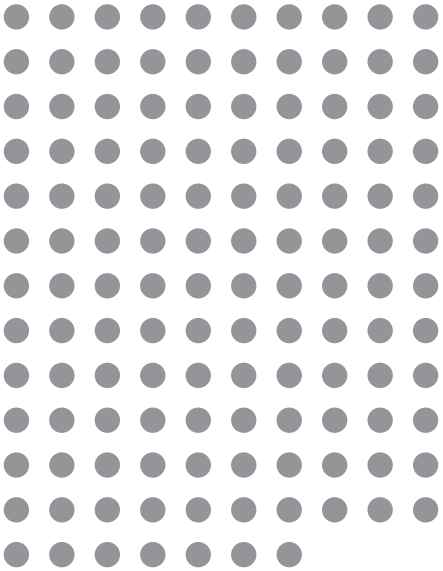

Overall ***SAVINGS*** of

52%

PREMIUM SOLUTION

Reconditioning Service

All ALVAN Reamers can be reconditioned to help reduce your overall tooling costs. This service is provided through Allied Machine & Engineering by utilizing the expertise of S.C.A.M.I. We will process the tools with a 25-35 work day lead time, depending on the style, the date we receive the tools, and the purchase order.

Reamer Style		Lead Time (work days)	Part No.	Reconditioned Part No.
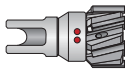	Replaceable Head	25	I7405-SVG-10000	**R**I7405SVG10000
	Monobloc	35	AL3620I04853	AL3620I04853**RP1**
	Cutting Ring	35	AL2TIAI05820	AL2TIAI05820**RP1**

Parts to be Reconditioned
(packaged safely)

Purchase Order

Allied Machine & Engineering
Attn: Regrind Department
120 Deeds Drive
Dover, OH 44622
United States

Reaming Overview

REAMER STYLES

Replaceable Head
Pages C: 10 - 19

- Diameter range: 11.80mm - 60.60mm
- Heads are available as fixed or expanding for improved productivity
- Straight or left hand helical flutes provide solutions for both through and blind holes
- Cylindrical or modular shanks improve concentricity

Monobloc
Pages C: 20 - 29

- Diameter range: 5.80mm - 32.60mm
- Available with central or radial through coolant
- Can be used for through or blind holes
- Cylindrical shanks improve cencentricity
- Expandable to accommodate for wear

Cutting Ring
Pages C: 30 - 53

- Diameter range: 17.60mm - 200.60mm
- The cutting edges are positioned asymmetrically to assure the best roundness of the hole
- Holes with tight tolerances can be accommodated, and the expansion ensures a perfect holding of the reaming diameter

General Reaming Notes

- If the depth is over 9xD, use a short length reamer to pilot the hole. Then finish with the longer length ⚠.
- For blind hole applications, always use central coolant. If in doubt, contact Allied's Application Engineering department.
- More stock allowance can be taken in softer materials. Less stock allowance should be taken in harder materials.
- A common practice to rapid out of the cut on through holes and to breakout only 2mm past the reaming depth.

IMPORTANT: Always use molykote (anti-seize applicant) on the conical seat and the threads on the central screw for assembly.

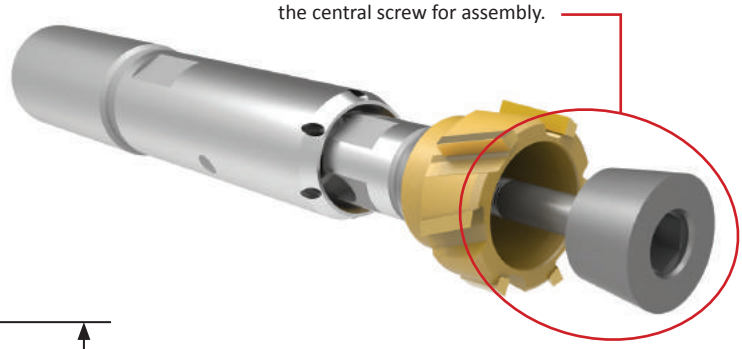

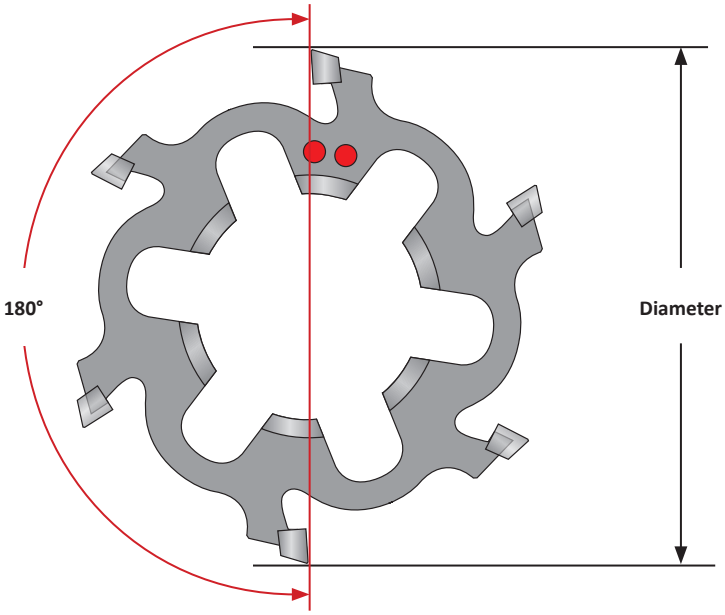

NOTE: The position of the dimples indicates which 2 cutting teeth are 180° opposed. Diameter measurements should be taken from these 2 cutting teeth.

⚠ WARNING **Tool failure can cause serious injury. To prevent:**
- When using holders without support bushing, use a shorter reamer to establish the initial hole diameter that is a minimum of 2 diameters deep.
- Do not rotate reamers more than 50 RPM unless it is engaged with the workpiece or fixture.

Factory technical assistance is available for your specific applications through our Application Engineering Team.

Quick Selection Guide

Breakdown by Diameter

Reamer Style	0.2283" 5.799mm	0.4656" 11.800mm	0.6929" 17.600mm	1.1024" 28.000mm	1.2638" 32.100mm	1.7717" 45.000mm	2.3858" 60.600mm	3.7402" 95.000mm	5.1181" 130.000mm	6.4961" 165.000mm	7.8975" 200.600mm
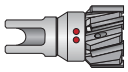 Replaceable Head (Fixed)		■	■	■	■	■	■				
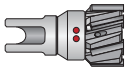 Replaceable Head (Expandable)		■	■	■	■	■	■				
Monobloc	■	■	■	■	■						
Cutting Ring			■	■	■	■	■	■	■	■	■

Breakdown by Features

Reamer Style	Capable Tolerance	Fastest Set-up	Replaceable Cutting Head	Expandable to Adjust for Wear	Recondition Available	Cylindrical Shanks	Modular Shanks	Through Coolant Options
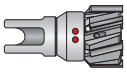 Replaceable Head (fixed)	**H7**	✓	✓		✓	✓	✓	✓
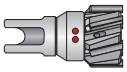 Replaceable Head (expandable)	**H6**		✓	✓	✓	✓	✓	✓
Monobloc	**H6**			✓	✓	✓		✓
Cutting Ring	**H6**		✓	✓	✓	✓	✓	✓

For more details on how to select a reamer, see the following pages.

How the Reamer Works

How the Reamer **Works**

- The cut is made in the lead-in zone (3), and the chip is made on the cutting face (1). The chip is removed by coolant.
- The lead-in (3) is defined depending on the application, the workpiece material, and the stock allowance.
- The radial land (2) is important for holding a good alignment, improving the surface roughness, and giving an effect similar to burnishing. The dimension of the radial land depends on the diameter.
- The radial land (2) is manufactured to be tapered on the rear.
- Fixed reamers are manufactured at the exact tapered value. Expandable reamers must be adjusted to the exact diameter. Both are already supplied at the nominal diameter by the manufacturer.
- The undercut of the cutting edge (5) avoids retract marks on the piece when the reamer is retracted from the cut.
- The front of the cutting edge (6) does not cut; if this feature is needed, a frontal lead must be supplied.

When to **Apply** a Reamer

- When the requested tolerance on diameter is IT8 or less
- When the requested finish is 63 µin (1.6 µmm) Ra or greater
- When the critical geometry characteristics of the hole are the roundness and straightness
- When parts are being mass produced
- When the parts are large and expensive

Elements of the Cutting Tooth

- (1) Cutting Face
- (2) Radial Land
- (3) Lead-in / Primary Face / Secondary Face
- (4) Rear Face
- (5) Undercut of Cutting Edge
- (6) Front of Cutting Edge

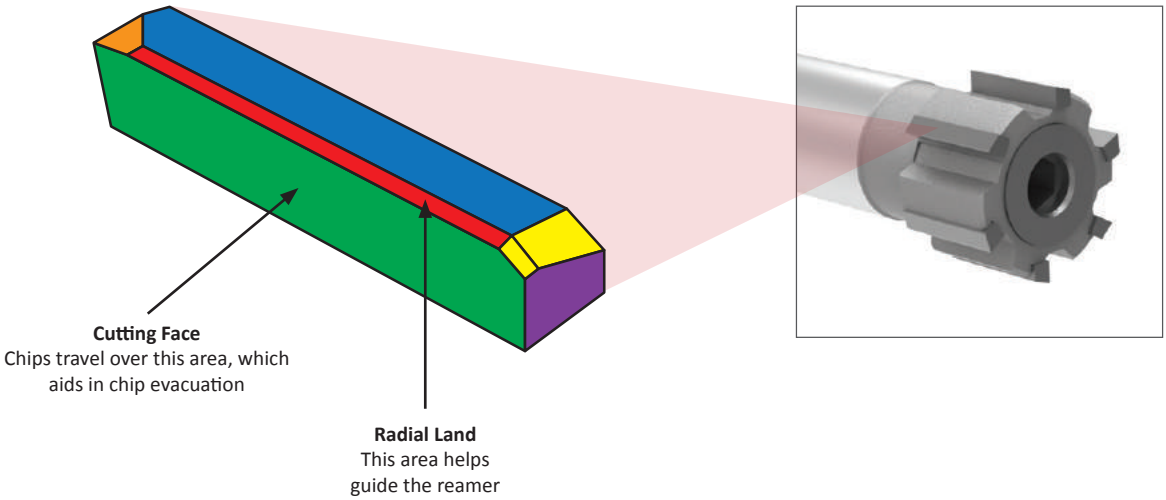

Reamer Recommendation Guide

ISO	Material	Hardness (BHN)	Through Hole				Blind Hole			
			Uninterrupted		Interrupted		Uninterrupted		Interrupted	
			Lead	Substrate & Coating	Lead	Substrate & Coating	Lead	Substrate & Coating	Lead	Substrate & Coating
P	**Free Machining Steel** 1118, 1215, 12L14, etc.	Below 150	N or E	Cermet Uncoated	E	Cermet Uncoated	J	Cermet Uncoated	V	Cermet Uncoated
		150 Above								
	Low Carbon Steel 1010, 1020, 1522, 1144, etc.	Below 250	N or E	Cermet Uncoated	E	Cermet Uncoated	J	Cermet Uncoated	V	Cermet Uncoated
	Medium Carbon Steel 1030, 1040, 1050, 1140, 1151, etc.	Below 300	N or E	Cermet Uncoated	E	Cermet Uncoated	X	Cermet Uncoated	V	Cermet Uncoated
	Alloy Steel 4140, 5140, 8640, etc.	Below 350	G or M	Cermet Uncoated	M	Cermet Uncoated	X	Cermet Uncoated	G	Cermet Uncoated
	High Strength Alloy 4340, 4330V, 300M, etc.	240 - 450	G or M*	Carbide Alcrona	M	Carbide Alcrona	X*	Carbide Alcrona	G*	Carbide Alcrona
	Structural Steel	–	E	Cermet	M	Carbide TiAlN	X	Cermet	G	Carbide TiAlN
	Tool Steel	–	M*	Carbide TiAlN	M*	Carbide TiAlN	X*	Carbide TiAlN	G*	Carbide TiAlN
S	**High Temp Alloy**	–	G*	Carbide TiAlN	G*	Carbide TiAlN	X*	Carbide TiAlN	G*	Carbide TiAlN
	Titanium Alloys	–	T	Carbide TiAlN	T	Carbide TiAlN	T	Carbide TiAlN	T	Carbide TiAlN
M	**Austenitic Stainless Steel** 304, 316, etc.	–	E	Carbide Alcrona	E	Carbide Alcrona	X	Carbide Alcrona	G*	Carbide Alcrona
	Ferritic Martensitic Stainless Steel 416, 420, 17-4PH, 15-5PH, etc.	–	N or E	Cermet or Carbide Alcrona	E	Cermet or Carbide Alcrona	X	Cermet or Carbide Alcrona	G	Cermet or Carbide Alcrona
K	**Ductile Cast Iron** Spheroidal - GS500	Below 130	V	Carbide Alcrona	V	Carbide Alcrona	J	Carbide Alcrona	V	Carbide Alcrona
		130 Above		Cermet Alcrona		Cermet Alcrona		Cermet Alcrona		Cermet Alcrona
	Grey Cast Iron GC15 - GC20 - GC25 - GC35	–	V	Carbide TiAlN	V	Carbide TiAlN	J	Carbide TiAlN	V	Carbide TiAlN
N	**Bronze Brass Copper**	Below 300	E	Carbide Uncoated	E	Carbide Uncoated	X	Carbide Uncoated	G	Carbide Uncoated
	Aluminum	Below 7% Si	V	Carbide Uncoated	V	Carbide Uncoated	V	Carbide Uncoated	G	Carbide Uncoated
		Above 7% Si	G	PCD Uncoated	G	PCD Uncoated	G	PCD Uncoated		PCD Uncoated

*Contact our Application Engineering department for special geometries to improve tool life.

Lead-in Angle Information

Straight Flute

Lead-in	Angles	Chip Evacuation	Description
A	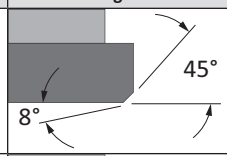		Lead-in can be used to improve finish.
F or **Y**	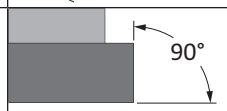		Can be used for stock removal at the bottom of the hole. Reduce the feed by 40% of the values on the recommended cutting data pages. - **F lead** = no chipbreaker - **Y lead** = chipbreaker
G or **X**	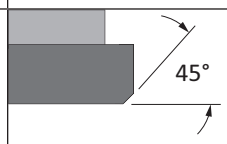		Standard and suitable for most materials. - **G lead** = no chipbreaker - **X lead** = chipbreaker
L or **W**	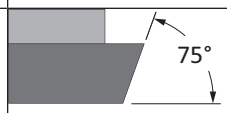		May provide improved straightness. Reduce the feed by 40% of the values on the recommended cutting data pages. - **L lead** = no chipbreaker - **W lead** = chipbreaker
N	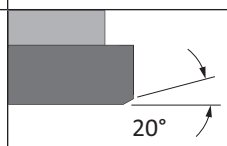		Ideal for through holes. It is possible to increase the feed up to 100% of the values on the recommended cutting data pages.
T	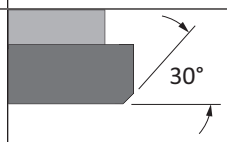		Suitable for titanium based alloys.
V or **J**	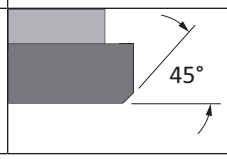		Suitable for most materials and increases tool life - **V lead** = no chipbreaker - **J lead** = chipbreaker

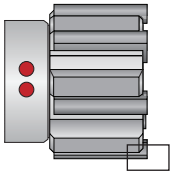

Straight

Helical Flute (Left Hand) - *Through Hole Applications Only*

Lead-in	Angles	Chip Evacuation	Description
E	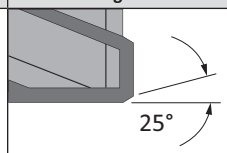		Standard and suitable for most materials. **NOTE:** Through hole applications only.
M	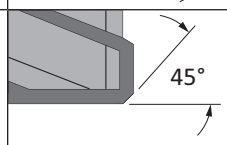		May provide better penetration rates in steels over 200 BHN. **NOTE:** Through hole applications only.
K	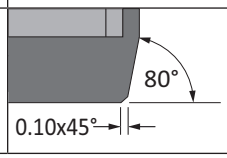		Excellent at breaking small chips that are easy to evacuate in blind hole applications. Requires 50% increased feed rate which will result in reduced tool life when compared to other leads.

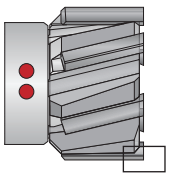

Helical

Coatings, Cutting Materials, and Dimple Indicators

Coating Information

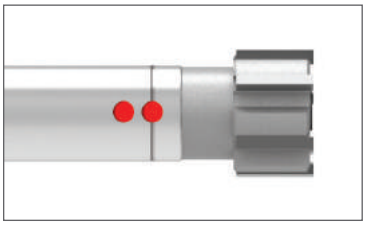

Uncoated

Ideal for non-ferrous applications

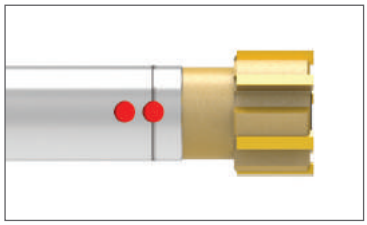

TiN (N)

Ideal for general purpose applications

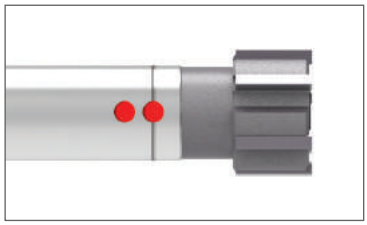

TiAlN (A)

Provides higher heat resistance to improve tool life

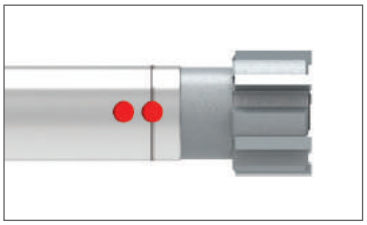

TiCN (C)

Provides improved surface finish

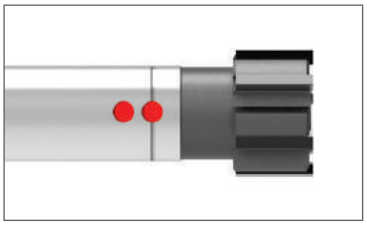

Alcrona (K)

Provides excellent wear resistance and can help increase cutting speeds

Cutting Material Information

Material	Indicator	Details
Carbide	K	A fine-grain carbide suitable for all conventional reaming applications. Recommended where rigidity is not excellent and speeds must be reduced.
Cermet	S	Cermet provides high wear resistance and is recommended for abrasive and increased speed applications. Not recommended for poor rigidity or interrupted cuts.

Dimple Indicators

Material	Indicator	Replaceable Head Style	Monobloc Style	Cutting Ring Style
Carbide	**Two Dimples**			
Cermet	**Two Dimples with Line**			

NOTE: The dimple location indicates which 2 cutting teeth are 180° opposed

Replaceable Head Reamers

Product Overview

Fixed Heads

- Non-expanding diameter
- Locking screw is straight (no taper)
- Allows for on-machine replacement
- Capable of H7 tolerance on diameter
- Available in straight and left hand helical flutes
- Available for recondition

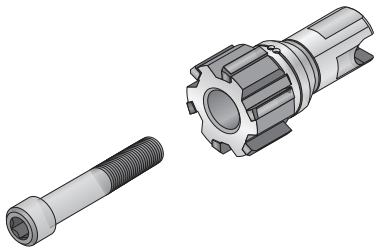

Expandable Heads

- Expandable diameter (1% of nominal diameter) to accommodate for wear
- Conical locking screw
- Requires set-up for diameter
- Capable of tight diameter tolerance (± 0.0002" (0.005mm))
- Available in straight and left hand helical flutes
- Available for recondition

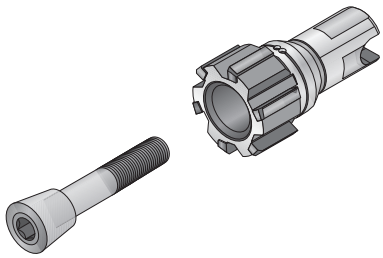

Mandrels

- Available in short, standard, and long lengths
- Reamer head design allows multiple diameters to be used within the same mandrel, ***which reduces inventory requirements***
- The same mandrel can use both fixed and expandable heads
- Coolant options are offered for both through and blind hole scenarios

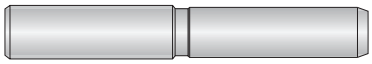

Uncoated

TiN Coated

TiAlN Coated

TiCN Coated

Alcrona Coated

Mandrel Shanks Available:

- Cylindrical
- Modular Connection

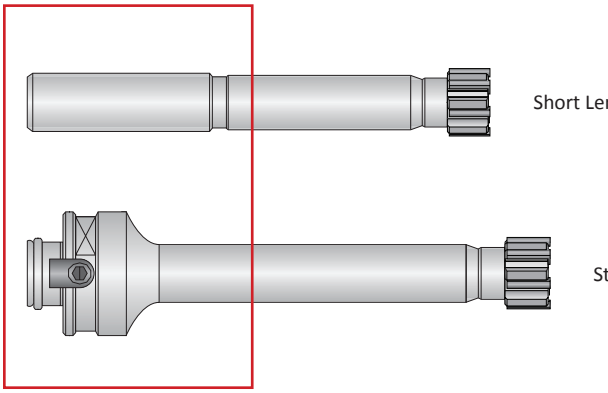

Short Length

Standard Length

Long Length

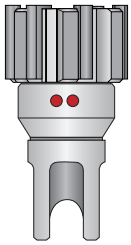

Straight Flute

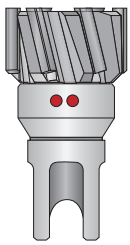

Left Hand Helical Flute

Type of Head	Coated/ Uncoated	Lead Time in Work Days (based on number of pieces)		
		Up to 5	6 - 19	20+
Fixed	Coated	15	25	25
	Uncoated	10	20	20
Expandable	Coated	20	25	30
	Uncoated	15	20	25

Product Nomenclature

Replaceable Head Style Reamer Heads

I	77	00	–	K	N	G	–	18000
1	2	3		4	5	6		7

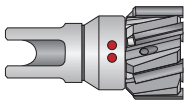

NOTE: If tool is reconditioned, put an "**R**" at the beginning of the item number

1. Shank Measure	2. Flute Style	3. Head Style	4. Substrate	5. Coating
Blank = Metric	**74** = Straight	**00** = Fixed head	**K** = Carbide	**L** = Uncoated carbide
I = Inch	**77** = Left hand helical	**05** = Expandable head	**S** = Cermet	**V** = Uncoated cermet
				N = TiN
				C = TiCN
				A = TiAlN
				K = Alcrona

6. Lead-in	7. Diameter
E, M, K = Left hand helical flute	**XX.XXX** = Metric
A, F, G, L, N, T, V = Straight flute	**X.XXXX** = Inch
J, W, X, Y = Straight flute with chipbreaker	

Reference Key

Symbol	Attribute
D_1	Reamer head diameter
D_2	Shank diameter
L_1	Overall length
L_2	Length of cut
H	Hex key (listed with screws)

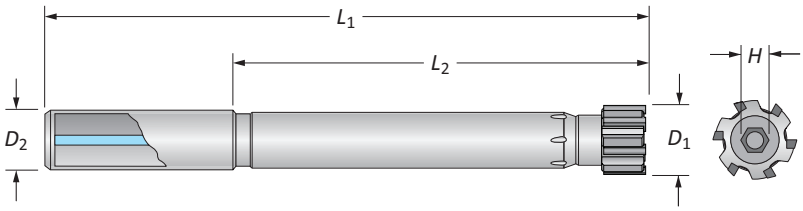

Building Your Complete Tool

You will need all three pieces to complete your replaceable head reamer assembly. The item numbers for the screws and the mandrels are listed on their respective pages. However, there is a guide on the pages where the heads are located. You must follow the guide to build the item number for the reamer head that you need.

The complete mandrel item numbers are listed on their respective pages. You do not need to build the mandrel numbers.

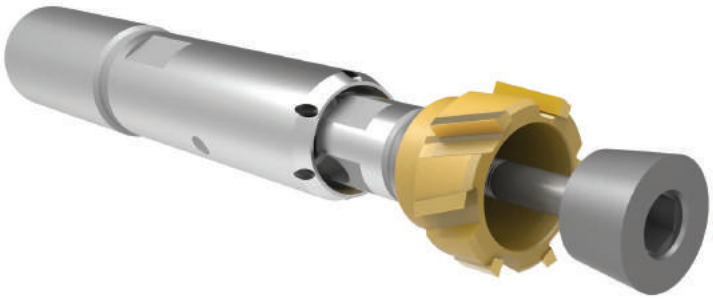

1

Select Your Head

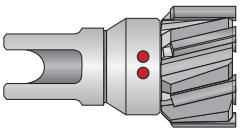

2

Select Your Screw

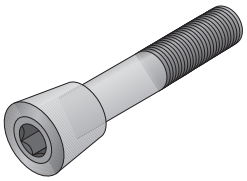

3

Select Your Mandrel

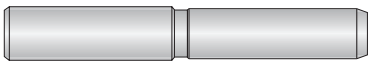

A DRILLING
B BORING
C REAMING
D BURNISHING
E THREADING
X SPECIALS

Replaceable Heads

Fixed

Build Your Part No.

1 Series

7400 Series	7700 Series

2 Flute Style

Your flute style is based on your series selection (above)

Straight Flute

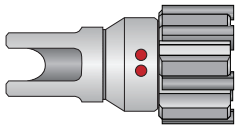

Helical Flute (Left Hand)

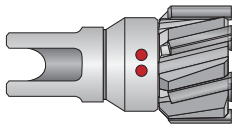

3 Carbide Grade and Coating Codes

These are the combinations of grades and coatings you can choose from

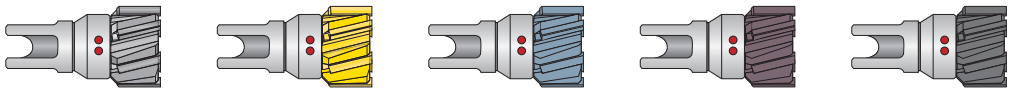

	Uncoated	TiN	TiCN	TiAlN	Alcrona
Carbide	KL	KN	KC	KA	KK
Cermet	SV	SN	SC	SA	SK

4 Lead-in Recommendations

	T	F	N	G	L	A	V
P			●	●		◐	○
S	●			◐			
M				●	◐		
H			◐	●			
K	○			●			◐
N				●		●	◐

	E	M	K
P	●		
S	●	◐	
M	●		
H	◐	●	
K	◐	●	
N	●	◐	

5 Diameter (H7 Tolerance)

For the diameter portion of the item number, refer to the following tables:

Imperial (in)		Metric (mm)	
D_1 Range	Tolerance (min/max)	D_1 Range	Tolerance (min/max)
0.4656 - 0.7086	+0 / +0.0007	11.800 - 18.000	+0 / +0.018
0.7087 - 1.1811	+0 / +0.0008	18.001 - 30.000	+0 / +0.021
1.1812 - 1.9685	+0 / +0.0010	30.001 - 50.000	+0 / +0.025
1.9686 - 2.3858	+0 / +0.0012	50.001 - 60.600	+0 / +0.030

● Best ◐ Better ○ Good

Ordering Example:

The customer needs the following:

- Straight fluted reamer head
- Fixed style
- Carbide
- TiN coating
- F lead-in
- 1.9686” diameter

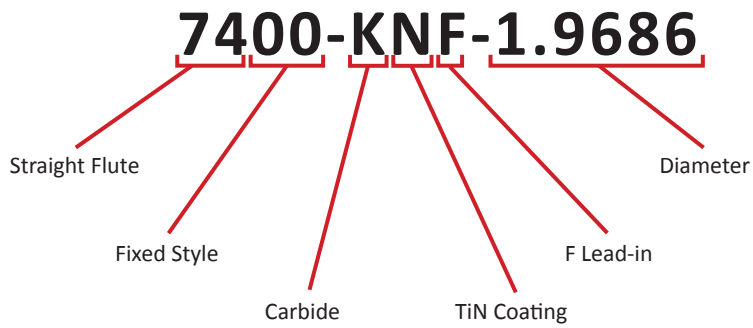

C: 62 - 73
Key on C: 1
C: 14 - 15
C: 16 - 18
C: 54 - 61
C: 74

Replaceable Heads

Expandable

Build Your Part No.

1 Series

7405 Series	7705 Series

2 Flute Style

Your flute style is based on your series selection (above)

Straight Flute	Helical Flute (Left Hand)

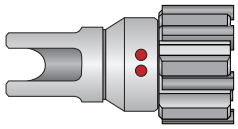

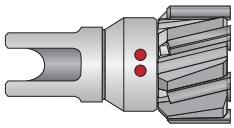

3 Carbide Grade and Coating Codes

These are the combinations of grades and coatings you can choose from

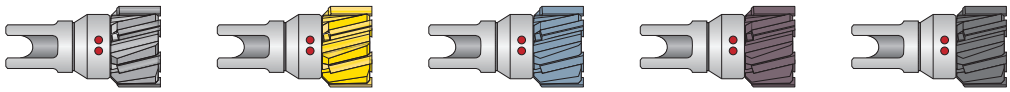

	Uncoated	TiN	TiCN	TiAlN	Alcrona
Carbide	KL	KN	KC	KA	KK
Cermet	SV	SN	SC	SA	SK

4 Lead-in Recommendations

	T	F	N	G	L	A	V
P			●	●		◐	○
S	●			◐			
M				●	◐		
H			◐	●			
K	○			●			◐
N				●		●	◐

	E	M	K
P	●		
S	●	◐	
M	●		
H	◐	●	
K	◐	●	
N	●	◐	

5 Diameter (H7 Tolerance)

For the diameter portion of the item number, refer to the following tables:

Imperial (in)		Metric (mm)	
D_1 Range	Tolerance (min/max)	D_1 Range	Tolerance (min/max)
0.4656 - 0.7086	-0.0002 / +0.0002	11.800 - 18.000	-0.005 / +0.005
0.7087 - 1.1811		18.001 - 30.000	
1.1812 - 1.5748		30.001 - 40.000	
1.5749 - 1.9685		40.001 - 50.000	
1.9686 - 2.3858		50.001 - 60.600	

● Best ◐ Better ○ Good

Ordering Example:

The customer needs the following:

- Straight fluted reamer head
- Expandable style
- Carbide
- TiN coating
- F lead-in
- 1.9686" diameter

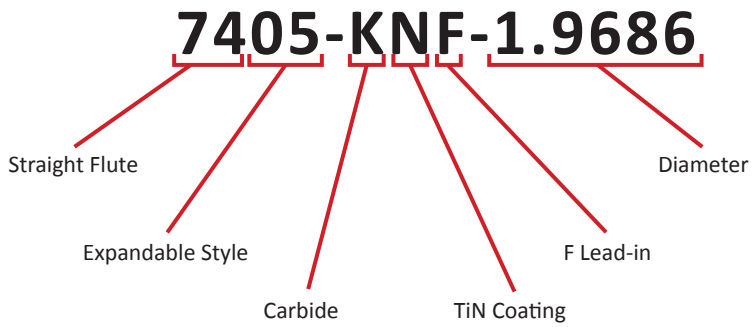

Key on C: 1

C: 62 - 73

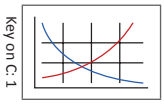

C: 14 - 15

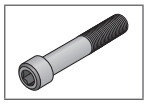

C: 16 - 18

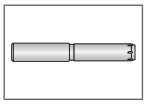

C: 54 - 61

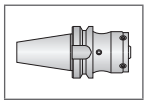

C: 74

Replaceable Head Screws

Fixed

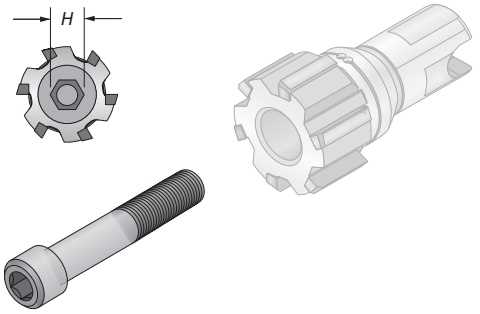

7000 Series

D_1 Range (inch)	D_1 Range (mm)	Part No.	*H* (mm)
0.4646 - 0.5751	11.800 - 14.609	**7000-VI-001**	2.5
0.5752 - 0.6932	14.610 - 17.609	**7000-VI-002**	3
0.6933 - 0.8507	17.610 - 21.609	**7000-VI-003**	4
0.8508 - 1.0475	21.610 - 26.609	**7000-VI-004**	5
1.0476 - 1.2838	26.610 - 32.609	**7000-VI-005**	6
1.2839 - 1.5987	32.610 - 40.609	**7000-VI-006**	6
1.5988 - 1.9924	40.610 - 50.609	**7000-VI-007**	8
1.9925 - 2.3858	50.610 - 60.600	**7000-VI-008**	10

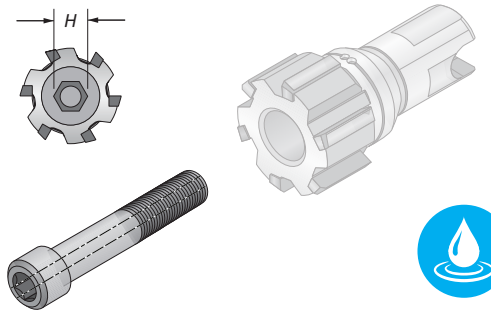

7001 Series

D_1 Range (inch)	D_1 Range (mm)	Part No.	*H* (mm)
0.4646 - 0.5751	11.800 - 14.609	**7001-VI-001**	2.5
0.5752 - 0.6932	14.610 - 17.609	**7001-VI-002**	3
0.6933 - 0.8507	17.610 - 21.609	**7001-VI-003**	4
0.8508 - 1.0475	21.610 - 26.609	**7001-VI-004**	5
1.0476 - 1.2838	26.610 - 32.609	**7001-VI-005**	6
1.2839 - 1.5987	32.610 - 40.609	**7001-VI-006**	6
1.5988 - 1.9924	40.610 - 50.609	**7001-VI-007**	8
1.9925 - 2.3858	50.610 - 60.600	**7001-VI-008**	10

C: 62 - 73
Key on C: 1
C: 12 - 13
C: 16 - 18
C: 54 - 61
C: 74

Replaceable Head Screws

Expandable

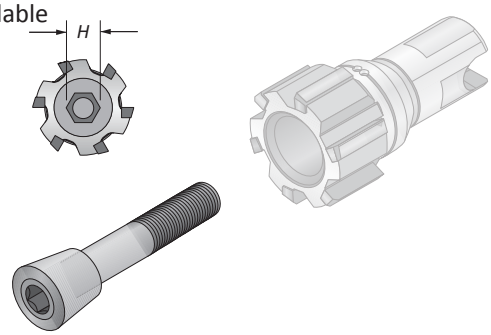

7000 Series

D_1 Range (inch)	D_1 Range (mm)	Part No.	*H* (mm)
0.4646 - 0.4964	11.800 - 12.609	**7000-VI-012**	**3.5**
0.4965 - 0.5357	12.610 - 13.609	**7000-VI-013**	**3.5**
0.5358 - 0.5751	13.610 - 14.609	**7000-VI-014**	**3.5**
0.5752 - 0.6145	14.610 - 15.609	**7000-VI-015**	**4**
0.6146 - 0.6538	15.610 - 16.609	**7000-VI-016**	**4**
0.6539 - 0.6932	16.610 - 17.609	**7000-VI-017**	**4**
0.6933 - 0.7326	17.610 - 18.609	**7000-VI-018**	**5**
0.7327 - 0.7719	18.610 - 19.609	**7000-VI-019**	**5**
0.7720 - 0.8113	19.610 - 20.609	**7000-VI-020**	**5**
0.8114 - 0.8507	20.610 - 21.609	**7000-VI-021**	**5**
0.8508 - 0.8901	21.610 - 22.609	**7000-VI-022**	**6**
0.8902 - 0.9294	22.610 - 23.609	**7000-VI-023**	**6**
0.9295 - 0.9688	23.610 - 24.609	**7000-VI-024**	**6**
0.9689 - 1.0082	24.610 - 25.609	**7000-VI-025**	**6**
1.0083 - 1.0475	25.610 - 26.609	**7000-VI-026**	**6**
1.0476 - 1.0869	26.610 - 27.609	**7000-VI-027**	**8**
1.0870 - 1.1263	27.610 - 28.609	**7000-VI-028**	**8**
1.1264 - 1.1656	28.610 - 29.609	**7000-VI-029**	**8**
1.1657 - 1.2050	29.610 - 30.609	**7000-VI-030**	**8**
1.2051 - 1.2444	30.610 - 31.609	**7000-VI-031**	**8**
1.2445 - 1.2838	31.610 - 32.609	**7000-VI-032**	**8**
1.2839 - 1.3231	32.610 - 33.609	**7000-VI-033**	**8**
1.3232 - 1.3625	33.610 - 34.609	**7000-VI-034**	**10**
1.3626 - 1.4019	34.610 - 35.609	**7000-VI-035**	**10**
1.4020 - 1.4412	35.610 - 36.609	**7000-VI-036**	**10**
1.4413 - 1.4806	36.610 - 37.609	**7000-VI-037**	**10**
1.4807 - 1.5200	37.610 - 38.609	**7000-VI-038**	**10**
1.5201 - 1.5593	38.610 - 39.609	**7000-VI-039**	**10**
1.5594 - 1.5987	39.610 - 40.609	**7000-VI-040**	**10**
1.5988 - 1.6381	40.610 - 41.609	**7000-VI-041**	**12**
1.6382 - 1.6775	41.610 - 42.609	**7000-VI-042**	**12**
1.6776 - 1.7168	42.610 - 43.609	**7000-VI-043**	**12**
1.7169 - 1.7562	43.610 - 44.609	**7000-VI-044**	**12**
1.7563 - 1.7956	44.610 - 45.609	**7000-VI-045**	**12**
1.7957 - 1.8349	45.610 - 46.609	**7000-VI-046**	**12**
1.8350 - 1.8743	46.610 - 47.609	**7000-VI-047**	**12**
1.8744 - 1.9137	47.610 - 48.609	**7000-VI-048**	**12**
1.9138 - 1.9530	48.610 - 49.609	**7000-VI-049**	**12**
1.9531 - 1.9924	49.610 - 50.609	**7000-VI-050**	**12**
1.9925 - 2.0318	50.610 - 51.609	**7000-VI-051**	**12**
2.0319 - 2.0712	51.610 - 52.609	**7000-VI-052**	**12**
2.0713 - 2.1105	52.610 - 53.609	**7000-VI-053**	**12**
2.1106 - 2.1499	53.610 - 54.609	**7000-VI-054**	**12**
2.1500 - 2.1893	54.610 - 55.609	**7000-VI-055**	**12**
2.1894 - 2.2286	55.610 - 56.609	**7000-VI-056**	**12**
2.2287 - 2.2680	56.610 - 57.609	**7000-VI-057**	**12**
2.2681 - 2.3074	57.610 - 58.609	**7000-VI-058**	**12**
2.3075 - 2.3468	58.610 - 59.609	**7000-VI-059**	**12**
2.3469 - 2.3858	59.610 - 60.609	**7000-VI-060**	**12**

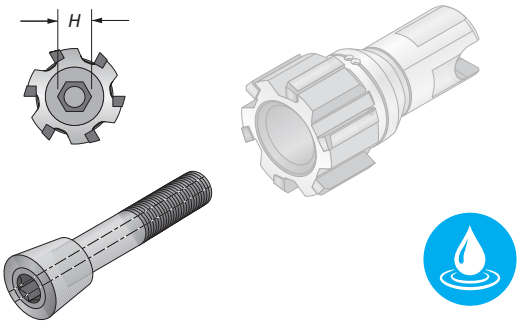

7001 Series

D_1 Range (inch)	D_1 Range (mm)	Part No.	*H* (mm)
0.4646 - 0.4964	11.800 - 12.609	**7001-VI-012**	**3.5**
0.4965 - 0.5357	12.610 - 13.609	**7001-VI-013**	**3.5**
0.5358 - 0.5751	13.610 - 14.609	**7001-VI-014**	**3.5**
0.5752 - 0.6145	14.610 - 15.609	**7001-VI-015**	**4**
0.6146 - 0.6538	15.610 - 16.609	**7001-VI-016**	**4**
0.6539 - 0.6932	16.610 - 17.609	**7001-VI-017**	**4**
0.6933 - 0.7326	17.610 - 18.609	**7001-VI-018**	**5**
0.7327 - 0.7719	18.610 - 19.609	**7001-VI-019**	**5**
0.7720 - 0.8113	19.610 - 20.609	**7001-VI-020**	**5**
0.8114 - 0.8507	20.610 - 21.609	**7001-VI-021**	**5**
0.8508 - 0.8901	21.610 - 22.609	**7001-VI-022**	**6**
0.8902 - 0.9294	22.610 - 23.609	**7001-VI-023**	**6**
0.9295 - 0.9688	23.610 - 24.609	**7001-VI-024**	**6**
0.9689 - 1.0082	24.610 - 25.609	**7001-VI-025**	**6**
1.0083 - 1.0475	25.610 - 26.609	**7001-VI-026**	**6**
1.0476 - 1.0869	26.610 - 27.609	**7001-VI-027**	**8**
1.0870 - 1.1263	27.610 - 28.609	**7001-VI-028**	**8**
1.1264 - 1.1656	28.610 - 29.609	**7001-VI-029**	**8**
1.1657 - 1.2050	29.610 - 30.609	**7001-VI-030**	**8**
1.2051 - 1.2444	30.610 - 31.609	**7001-VI-031**	**8**
1.2445 - 1.2838	31.610 - 32.609	**7001-VI-032**	**8**
1.2839 - 1.3231	32.610 - 33.609	**7001-VI-033**	**8**
1.3232 - 1.3625	33.610 - 34.609	**7001-VI-034**	**10**
1.3626 - 1.4019	34.610 - 35.609	**7001-VI-035**	**10**
1.4020 - 1.4412	35.610 - 36.609	**7001-VI-036**	**10**
1.4413 - 1.4806	36.610 - 37.609	**7001-VI-037**	**10**
1.4807 - 1.5200	37.610 - 38.609	**7001-VI-038**	**10**
1.5201 - 1.5593	38.610 - 39.609	**7001-VI-039**	**10**
1.5594 - 1.5987	39.610 - 40.609	**7001-VI-040**	**10**
1.5988 - 1.6381	40.610 - 41.609	**7001-VI-041**	**12**
1.6382 - 1.6775	41.610 - 42.609	**7001-VI-042**	**12**
1.6776 - 1.7168	42.610 - 43.609	**7001-VI-043**	**12**
1.7169 - 1.7562	43.610 - 44.609	**7001-VI-044**	**12**
1.7563 - 1.7956	44.610 - 45.609	**7001-VI-045**	**12**
1.7957 - 1.8349	45.610 - 46.609	**7001-VI-046**	**12**
1.8350 - 1.8743	46.610 - 47.609	**7001-VI-047**	**12**
1.8744 - 1.9137	47.610 - 48.609	**7001-VI-048**	**12**
1.9138 - 1.9530	48.610 - 49.609	**7001-VI-049**	**12**
1.9531 - 1.9924	49.610 - 50.609	**7001-VI-050**	**12**
1.9925 - 2.0318	50.610 - 51.609	**7001-VI-051**	**12**
2.0319 - 2.0712	51.610 - 52.609	**7001-VI-052**	**12**
2.0713 - 2.1105	52.610 - 53.609	**7001-VI-053**	**12**
2.1106 - 2.1499	53.610 - 54.609	**7001-VI-054**	**12**
2.1500 - 2.1893	54.610 - 55.609	**7001-VI-055**	**12**
2.1894 - 2.2286	55.610 - 56.609	**7001-VI-056**	**12**
2.2287 - 2.2680	56.610 - 57.609	**7001-VI-057**	**12**
2.2681 - 2.3074	57.610 - 58.609	**7001-VI-058**	**12**
2.3075 - 2.3468	58.610 - 59.609	**7001-VI-059**	**12**
2.3469 - 2.3858	59.610 - 60.609	**7001-VI-060**	**12**

C: 62 - 73

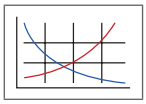

Key on C: 1

C: 12 - 13

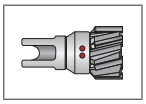

C: 16 - 18

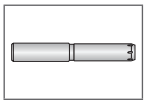

C: 54 - 61

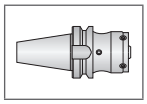

C: 74

Replaceable Head Mandrels

Short Length | Cylindrical Shank | Diameter Range: 0.4646” - 2.3858” (11.800mm - 60.600mm)

7000 Series	
Radial Coolant Only	Central and Radial Coolant
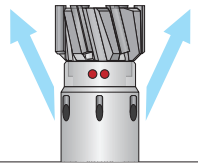	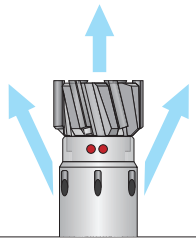
Series 7000 Locking Screw	Series 7001 Locking Screw

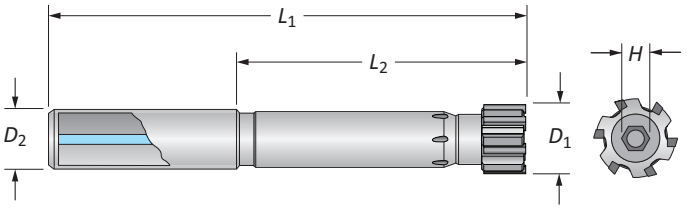

D_1 Range		Mandrel				
Imperial (in)	Metric (mm)	L_2	L_1	D_2	No. of Teeth	Part No.
0.4646 - 0.5751	11.800 - 14.609	50	95	12	6	**7000-MC-001**
0.5752 - 0.6932	14.610 - 17.609	65	113	16	6	**7000-MC-002**
0.6933 - 0.8507	17.610 - 21.609	75	125	20	6	**7000-MC-003**
0.8508 - 1.0475	21.610 - 26.609	85	135	20	6	**7000-MC-004**
1.0476 - 1.2838	26.610 - 32.609	105	161	25	6	**7000-MC-005**
1.2839 - 1.5987	32.610 - 40.609	120	180	32	6	**7000-MC-006**
1.5988 - 1.8170	40.610 - 50.600	120	180	32	6	**7000-MC-007**
1.8171 - 1.9924	45.610 - 50.600	120	180	32	8	**7000-MC-075**
1.9925 - 2.3858	50.610 - 60.600	120	190	40	8	**7000-MC-008**

7001 Series	
No Coolant	Central Coolant Only
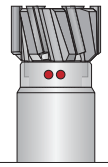	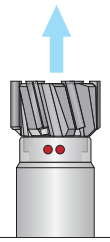
Series 7000 Locking Screw	Series 7001 Locking Screw

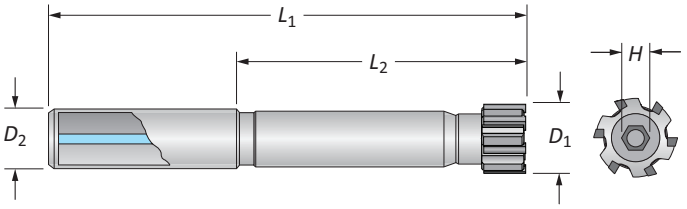

D_1 Range		Mandrel				
Imperial (in)	Metric (mm)	L_2	L_1	D_2	No. of Teeth	Part No.
0.4646 - 0.5751	11.800 - 14.609	50	95	12	6	**7001-MC-001**
0.5752 - 0.6932	14.610 - 17.609	65	113	16	6	**7001-MC-002**
0.6933 - 0.8507	17.610 - 21.609	75	125	20	6	**7001-MC-003**
0.8508 - 1.0475	21.610 - 26.609	85	135	20	6	**7001-MC-004**
1.0476 - 1.2838	26.610 - 32.609	105	161	25	6	**7001-MC-005**
1.2839 - 1.5987	32.610 - 40.609	120	180	32	6	**7001-MC-006**
1.5988 - 1.8170	40.610 - 50.600	120	180	32	6	**7001-MC-007**
1.8171 - 1.9924	45.610 - 50.600	120	180	32	8	**7001-MC-075**
1.9925 - 2.3858	50.610 - 60.600	120	190	40	8	**7001-MC-008**

Key on C: 1
C: 62 - 73
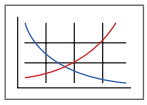
C: 12 - 13
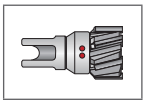
C: 14 - 15
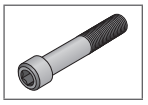
C: 54 - 61
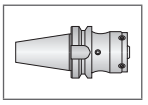
C: 74

Application recommendation:

- Through hole application = radial coolant
- Blind hole application = central coolant

Replaceable Head Mandrels

Long Length | Cylindrical Shank | Diameter Range: 0.4646” - 2.3858” (11.800mm - 60.600mm)

7000 Series

Radial Coolant Only	Central and Radial Coolant
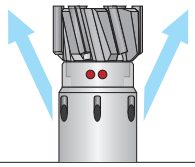	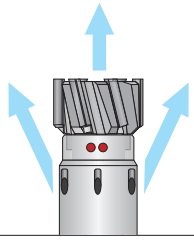
Series 7000 Locking Screw	Series 7001 Locking Screw

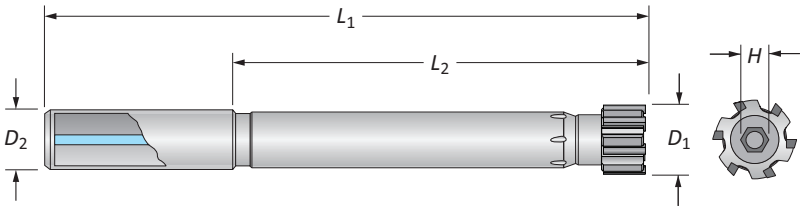

D_1 Range		Mandrel				
Imperial (in)	Metric (mm)	L_2	L_1	D_2	No. of Teeth	Part No.
0.4646 - 0.5751	11.800 - 14.609	95	140	12	6	**7000-ML-001**
0.5752 - 0.6932	14.610 - 17.609	105	153	16	6	**7000-ML-002**
0.6933 - 0.8507	17.610 - 21.609	125	175	20	6	**7000-ML-003**
0.8508 - 1.0475	21.610 - 26.609	145	195	20	6	**7000-ML-004**
1.0476 - 1.2838	26.610 - 32.609	165	221	25	6	**7000-ML-005**
1.2839 - 1.5987	32.610 - 40.609	185	245	32	6	**7000-ML-006**
1.5988 - 1.8170	40.610 - 50.600	185	245	32	6	**7000-ML-007**
1.8171 - 1.9924	45.610 - 50.600	185	245	32	8	**7000-ML-075**
1.9925 - 2.3858	50.610 - 60.600	185	255	40	8	**7000-ML-008**

7001 Series

No Coolant	Central Coolant Only
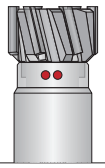	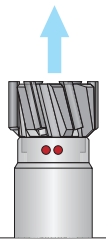
Series 7000 Locking Screw	Series 7001 Locking Screw

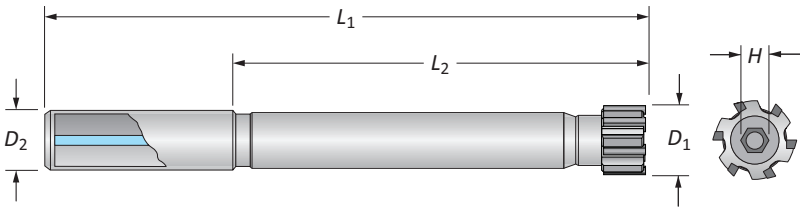

D_1 Range		Mandrel				
Imperial (in)	Metric (mm)	L_2	L_1	D_2	No. of Teeth	Part No.
0.4646 - 0.5751	11.800 - 14.609	95	140	12	6	**7001-ML-001**
0.5752 - 0.6932	14.610 - 17.609	105	153	16	6	**7001-ML-002**
0.6933 - 0.8507	17.610 - 21.609	125	175	20	6	**7001-ML-003**
0.8508 - 1.0475	21.610 - 26.609	145	195	20	6	**7001-ML-004**
1.0476 - 1.2838	26.610 - 32.609	165	221	25	6	**7001-ML-005**
1.2839 - 1.5987	32.610 - 40.609	185	245	32	6	**7001-ML-006**
1.5988 - 1.8170	40.610 - 50.600	185	245	32	6	**7001-ML-007**
1.8171 - 1.9924	45.610 - 50.600	185	245	32	8	**7001-ML-075**
1.9925 - 2.3858	50.610 - 60.600	185	255	40	8	**7001-ML-008**

Key on C:1

C: 62 - 73 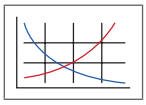

C: 12 - 13 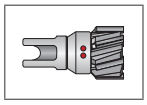

C: 14 - 15 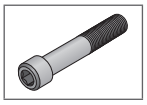

C: 54 - 61 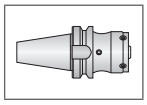

C: 74

Application recommendation:

- Through hole application = radial coolant
- Blind hole application = central coolant

Replaceable Head Mandrels

Standard Length | Modular Shank | Diameter Range: 0.4646” - 2.3858” (11.800mm - 60.600mm)

7000 Series	
Radial Coolant Only	Central and Radial Coolant
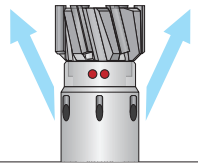	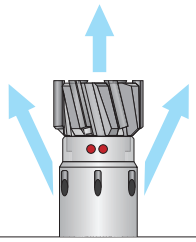
Series 7000 Locking Screw	Series 7001 Locking Screw

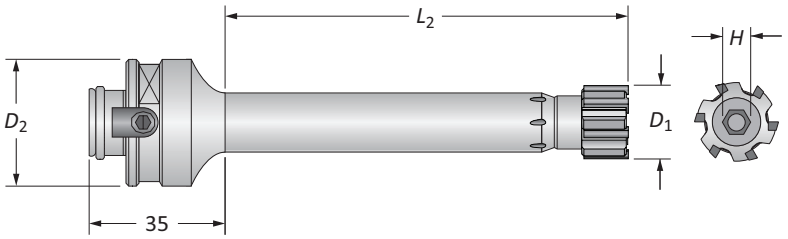

D_1 Range		Mandrel			
Imperial (in)	Metric (mm)	L_2	D_2	No. of Teeth	Part No.
0.4646 - 0.5751	11.800 - 14.609	65	50	6	**7000-MM-001**
0.5752 - 0.6932	14.610 - 17.609	80	50	6	**7000-MM-002**
0.6933 - 0.8507	17.610 - 21.609	90	50	6	**7000-MM-003**
0.8508 - 1.0475	21.610 - 26.609	100	50	6	**7000-MM-004**
1.0476 - 1.2838	26.610 - 32.609	110	50	6	**7000-MM-005**
1.2839 - 1.5987	32.610 - 40.609	120	50	6	**7000-MM-006**
1.5988 - 1.8170	40.610 - 50.600	120	50	6	**7000-MM-007**
1.8171 - 1.9924	45.610 - 50.600	120	50	8	**7000-MM-075**
1.9925 - 2.3858	50.610 - 60.600	120	50	8	**7000-MM-008**

7001 Series	
No Coolant	Central Coolant Only
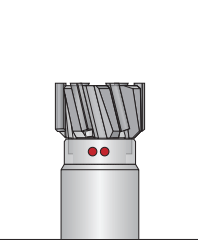	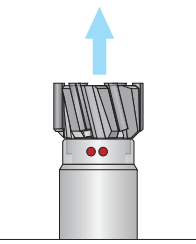
Series 7000 Locking Screw	Series 7001 Locking Screw

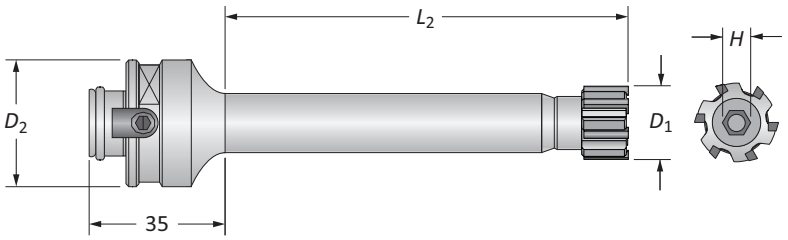

D_1 Range		Mandrel			
Imperial (in)	Metric (mm)	L_2	D_2	No. of Teeth	Part No.
0.4646 - 0.5751	11.800 - 14.609	65	50	6	**7001-MM-001**
0.5752 - 0.6932	14.610 - 17.609	80	50	6	**7001-MM-002**
0.6933 - 0.8507	17.610 - 21.609	90	50	6	**7001-MM-003**
0.8508 - 1.0475	21.610 - 26.609	100	50	6	**7001-MM-004**
1.0476 - 1.2838	26.610 - 32.609	110	50	6	**7001-MM-005**
1.2839 - 1.5987	32.610 - 40.609	120	50	6	**7001-MM-006**
1.5988 - 1.8170	40.610 - 50.600	120	50	6	**7001-MM-007**
1.8171 - 1.9924	45.610 - 50.600	120	50	8	**7001-MM-075**
1.9925 - 2.3858	50.610 - 60.600	120	50	8	**7001-MM-008**

C: 62 - 73
Key on C: 1
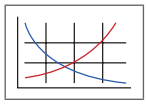
C: 12 - 13
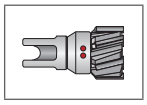
C: 14 - 15
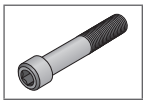
C: 54 - 61
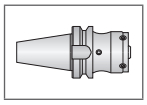
C: 74

Application recommendation:

- Through hole application = radial coolant
- Blind hole application = central coolant

Replaceable Head Mandrels

AR Upper Receiver | Cylindrical Shank | Diameter Range: 1.0000 - 1.1875 (25.40mm - 30.16mm)

7000 Series	
Radial Coolant Only	Central and Radial Coolant
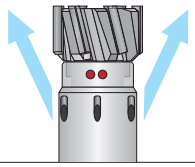	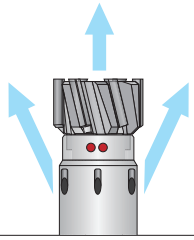
Series 7000 Locking Screw	Series 7001 Locking Screw

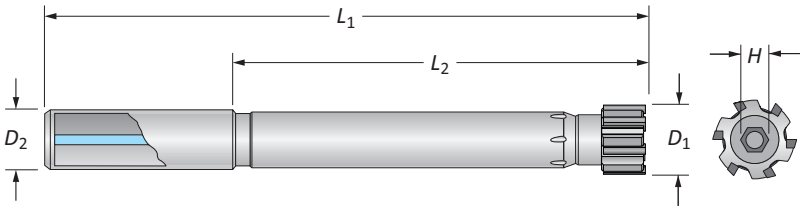

D_1		Mandrel				
Imperial (in)	Metric (mm)	L_2	L_1	D_2	No. of Teeth	Part No.
1.1875	30.16	9.65	11.65	0.750	6	**7000-MC-AR10**
1.0000	25.40	8.66	10.63	0.750	6	**7000-MC-AR15**

Achieve the ***long length of cut*** and ***surface finish*** you need.

CASE STUDY | AR15 Upper Receiver

Material: 6061 T6 Aluminum

Measure	Carbide-Tipped Chucking Reamer	ALVAN® Replaceable Head Reamer
RPM	1146	2559
Speed	300 SFM	670 SFM
Feed In	0.018 IPR (20.6 IPM)	0.045 IPR (115 IPM)
Feed Out	0.018 IPR (20.6 IPM)	0.090 IPR (230.3 IPM)
Finish	63 Ra	32 Ra
Follow-Up Process	Roller Burnish	None
Cycle Time	0:00:55	0:00:09
Cost-Per-Hole	$0.77	$0.26
Total Parts	3,500	3,500
Total Cost	$2,691.18	$933.84

SURFACE FINISH 32 Ra
no burnishing required

123% ↑ SPEED

150% ↑ FEED

84% ↓ CYCLE TIME

65% ↓ TOTAL COSTS

C: 62 - 73 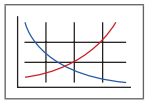

C: 12 - 13 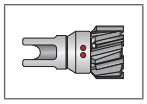

C: 14 - 15 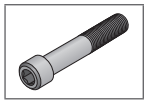

C: 54 - 61 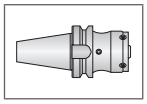

C: 74

Key on C: 1

Application recommendation:

- Through hole application = radial coolant
- Blind hole application = central coolant

Monobloc Style Reamers

Product Overview

Monobloc Reamer Features
• Diameter range: 0.2283” - 1.2638” (5.80mm - 32.10mm)
• Available with straight or left hand helical flutes
• Expandable up to 1% of nominal diameter
• Available with cylindrical shanks only
• Work day lead time 20 - 25 days
• Available for recondition

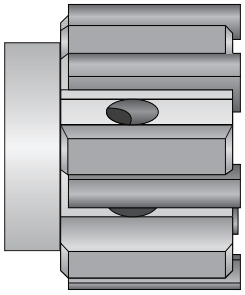

Straight Flute

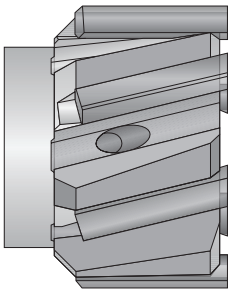

Left Hand Helical Flute

Uncoated

TiN Coated

TiAlN Coated

TiCN Coated

Alcrona Coated

Straight Flute - Through or Blind Holes

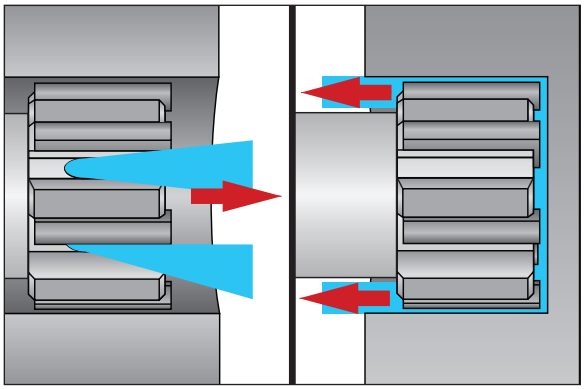

Use for either through hole or blind hole applications. The coolant flow determines the direction of the chip evacuation.

Left Hand Helical Flute - Through Holes Only

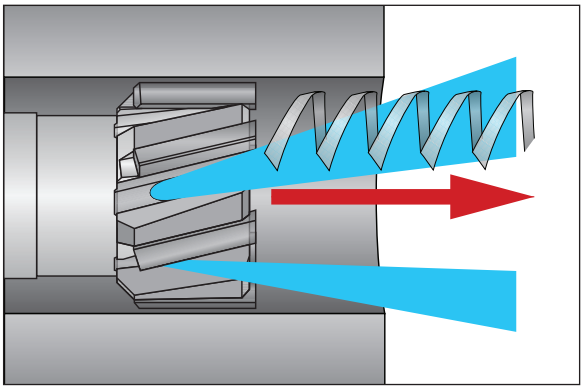

Use when reaming through hole applications. The cutting action of the helical flutes forces the chips forward for evacuation.

Product Nomenclature

Monobloc Style Reamers

I	9	2440	–	KL	E	–	006250	+	0000	–	0005
1	2	3		4	5		6		7		

NOTE: If diameter and tolerance are specified in inch units, put an "**I**" at the beginning of the item number

1. Units of Measure

Blank = Metric diameter

I = Inch diameter

2. Shank Measure

Blank = Metric

9 = Inch

3. Series

2440 = Short length, straight flute - no coolant

2441 = Short length, straight flute - central coolant (blind holes)

3620 = Short length, straight flute - radial coolant (through holes)

3627 = Short length, helical flute - radial coolant (through holes)

2430 = Long length, straight flute - no coolant

2431 = Long length, straight flute - central coolant (blind holes)

3610 = Long length, straight flute - radial coolant (through holes)

3617 = Long length, helical flute - radial coolant (through holes)

4. Coating and Substrate

KL = Uncoated carbide

KN = TiN coated carbide

KC = TiCN coated carbide

KA = TiAlN coated carbide

KK = Alcrona coated carbide

SV = Uncoated cermet

SN = TiN coated cermet

SC = TiCN coated cermet

SA = TiAlN coated cermet

SK = Alcrona coated cermet

5. Lead-in

E, M, K = Left hand helical flute

A, F, G, L, N, T, V = Straight flute

J, W, X, Y = Straight flute with chipbreaker

6. Diameter

XX.XXXX = Imperial (inch)

XXX.XXX = Metric (mm)

7. Tolerance*

4 decimal places = inch tolerance

3 decimal places = mm tolerance

*The total tolerance capable is 0.0002" (0.005mm)

Reference Key

Symbol	Attribute
D_1	Reamer diameter
D_2	Shank diameter
L_1	Overall length
L_2	Body length
L_{15}	Cutting edge length
H	Hex key

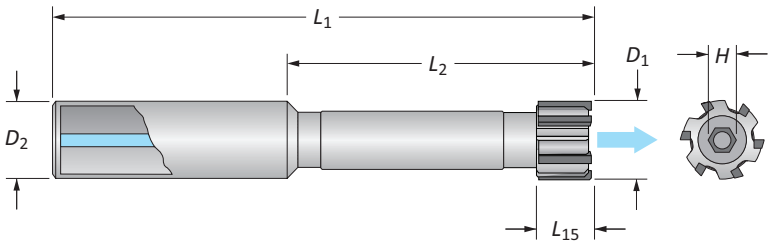

Monobloc Reamers

2440 Series | Short Length | Diameter Range: 0.2283” - 1.2638” (5.80mm - 32.10mm)

Series	2440
Flute	Straight
Type	Blind or Through Holes
Coolant	None

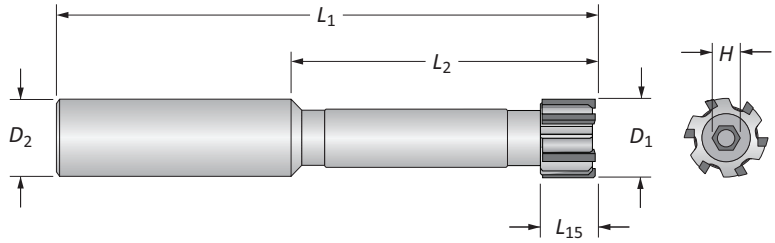

Inch Shank Part No. 92440-CGL-D_1					Metric Shank Part No. 2440-CGL-D_1						
D_1 Range	L_{15}	L_2	L_1	D_2	D_1 Range	L_{15}	L_2	L_1	D_2	No. of Teeth	H (mm)
0.2283 - 0.2598	0.315	1.575	3.150	0.500	5.80 - 6.60	8	40	80	12	4	2
0.2599 - 0.2992	0.315	1.575	3.150	0.500	6.61 - 7.60	8	40	80	12	4	2
0.2993 - 0.3386	0.394	1.575	3.150	0.500	7.61 - 8.60	10	40	80	12	4	2.5
0.3387 - 0.3780	0.394	1.969	3.543	0.500	8.61 - 9.60	10	50	90	12	4	2.5
0.3781 - 0.4173	0.394	1.969	3.740	0.500	9.61 - 10.60	10	50	95	12	6	3
0.4174 - 0.4567	0.394	2.362	4.134	0.500	10.61 - 11.60	10	60	105	12	6	3
0.4568 - 0.4961	0.394	2.362	4.134	0.500	11.61 - 12.60	10	60	105	12	6	3
0.4962 - 0.5354	0.394	2.362	4.134	0.500	12.61 - 13.60	10	60	105	12	6	4
0.5355 - 0.5748	0.394	2.362	4.528	0.500	13.61 - 14.60	10	70	115	12	6	4
0.5749 - 0.6142	0.394	2.362	4.528	0.500	14.61 - 15.60	10	70	115	12	6	4
0.6143 - 0.6535	0.394	3.150	5.118	0.625	15.61 - 16.60	10	80	130	16	6	4
0.6536 - 0.6929	0.394	3.150	5.118	0.625	16.61 - 17.60	10	80	130	16	6	5
0.6930 - 0.7323	0.472	3.543	5.512	0.625	17.61 - 18.60	12	90	140	16	6	5
0.7324 - 0.7520	0.472	3.543	5.906	0.750	18.61 - 19.10	12	90	150	20	6	5
0.7521 - 0.7913	0.472	3.937	6.229	0.750	19.11 - 20.10	12	100	160	20	6	5
0.7914 - 0.8307	0.472	3.937	6.229	0.750	20.11 - 21.10	12	100	160	20	6	5
0.8308 - 0.8701	0.472	3.937	6.229	0.750	21.11 - 22.10	12	100	160	20	6	6
0.8702 - 0.9094	0.472	3.937	6.229	0.750	22.11 - 23.10	12	100	160	20	6	6
0.9095 - 0.9488	0.472	3.937	6.229	0.750	23.11 - 24.10	12	100	160	20	6	6
0.9489 - 0.9882	0.472	3.937	6.229	0.750	24.11 - 25.10	12	100	160	20	6	6
0.9883 - 1.0276	0.472	4.331	6.693	1.000	25.11 - 26.10	16	110	170	25	6	6
1.0277 - 1.0669	0.551	4.331	6.693	1.000	26.11 - 27.10	16	110	170	25	6	6
1.0670 - 1.1063	0.551	4.331	6.693	1.000	27.11 - 28.10	16	110	170	25	6	8
1.1064 - 1.1457	0.551	4.331	6.693	1.000	28.11 - 29.10	16	110	170	25	6	8
1.1458 - 1.1850	0.551	4.331	6.693	1.000	29.11 - 30.10	16	110	170	25	6	8
1.1851 - 1.2244	0.551	4.331	6.693	1.000	30.11 - 31.10	16	110	170	25	6	8
1.2245 - 1.2638	0.551	4.331	6.693	1.000	31.11 - 32.10	16	110	170	25	6	8

“CG” Portion of Item No. (Coating and Substrate Code)

Grade	Uncoated	TiN	TiCN	TiAlN	Alcrona
Carbide	KL	KN	KC	KA	KK
Cermet	SV	SN	SC	SA	SK

“L” Portion of Item No. (Lead-in Recommendation)

ISO Material	T	F	N	G	L	A	V
P			●	●		◐	○
S	●			◐			
M				●	◐		
H			◐	●			
K	○			●			◐
N				●		●	◐

● Best ◐ Better ○ Good

Ordering Example:
The customer needs the following:

- Metric shank
- Carbide
- TiN coating
- F lead-in
- 30.60mm diameter
- Blind hole
- Flood coolant

2440-KNF-030600

Metric Shank | Carbide w/ TiN coating | F Lead-in | Diameter

C: 62 - 73

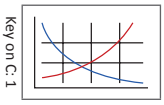

C: 54 - 61

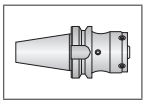

C: 75

Monobloc Reamers

2441 Series | Short Length | Diameter Range: 0.2283” - 1.2638” (5.80mm - 32.10mm)

Series	2441
Flute	Straight
Type	Blind Holes
Coolant	Central

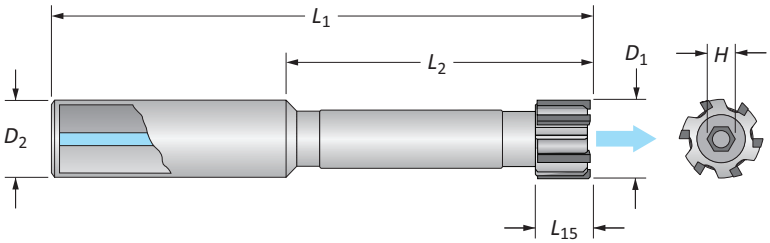

Inch Shank Part No. 92441-CGL-D_1					Metric Shank Part No. 2441-CGL-D_1						
D_1 Range	L_{15}	L_2	L_1	D_2	D_1 Range	L_{15}	L_2	L_1	D_2	No. of Teeth	H (mm)
0.2283 - 0.2598	0.315	1.575	3.071	0.500	5.80 - 6.60	8	40	80	12	4	2
0.2599 - 0.2992	0.315	1.575	3.071	0.500	6.61 - 7.60	8	40	80	12	4	2
0.2993 - 0.3386	0.394	1.575	3.071	0.500	7.61 - 8.60	10	40	80	12	4	2.5
0.3387 - 0.3780	0.394	1.969	3.465	0.500	8.61 - 9.60	10	50	90	12	4	2.5
0.3781 - 0.4173	0.394	1.969	3.740	0.500	9.61 - 10.60	10	50	95	12	6	3
0.4174 - 0.4567	0.394	1.969	3.740	0.500	10.61 - 11.60	10	60	105	12	6	3
0.4568 - 0.4961	0.394	1.969	3.740	0.500	11.61 - 12.60	10	60	105	12	6	3
0.4962 - 0.5354	0.394	1.969	3.740	0.500	12.61 - 13.60	10	60	105	12	6	4
0.5355 - 0.5748	0.394	1.969	3.740	0.500	13.61 - 14.60	10	70	115	12	6	4
0.5749 - 0.6142	0.394	1.969	3.740	0.500	14.61 - 15.60	10	70	115	12	6	4
0.6143 - 0.6535	0.394	1.969	3.937	0.625	15.61 - 16.60	10	80	130	16	6	4
0.6536 - 0.6929	0.394	1.969	3.937	0.625	16.61 - 17.60	10	80	130	16	6	5
0.6930 - 0.7323	0.472	1.969	3.937	0.625	17.61 - 18.60	12	90	140	16	6	5
0.7324 - 0.7520	0.472	2.362	4.724	0.750	18.61 - 19.10	12	90	150	20	6	5
0.7521 - 0.7913	0.472	2.362	4.724	0.750	19.11 - 20.10	12	100	160	20	6	5
0.7914 - 0.8307	0.472	2.362	4.724	0.750	20.11 - 21.10	12	100	160	20	6	5
0.8308 - 0.8701	0.472	2.362	4.724	0.750	21.11 - 22.10	12	100	160	20	6	6
0.8702 - 0.9094	0.472	2.362	4.724	0.750	22.11 - 23.10	12	100	160	20	6	6
0.9095 - 0.9488	0.472	2.362	4.724	0.750	23.11 - 24.10	12	100	160	20	6	6
0.9489 - 0.9882	0.472	2.362	4.724	0.750	24.11 - 25.10	12	100	160	20	6	6
0.9883 - 1.0276	0.472	2.953	5.315	1.000	25.11 - 26.10	16	110	170	25	6	6
1.0277 - 1.0669	0.551	2.953	5.315	1.000	26.11 - 27.10	16	110	170	25	6	6
1.0670 - 1.1063	0.551	2.953	5.315	1.000	27.11 - 28.10	16	110	170	25	6	8
1.1064 - 1.1457	0.551	2.953	5.315	1.000	28.11 - 29.10	16	110	170	25	6	8
1.1458 - 1.1850	0.551	2.953	5.315	1.000	29.11 - 30.10	16	110	170	25	6	8
1.1851 - 1.2244	0.551	2.953	5.315	1.000	30.11 - 31.10	16	110	170	25	6	8
1.2245 - 1.2638	0.551	2.953	5.315	1.000	31.11 - 32.10	16	110	170	25	6	8

“CG” Portion of Item No. (Coating and Substrate Code)

Grade	Uncoated	TiN	TiCN	TiAlN	Alcrona
Carbide	KL	KN	KC	KA	KK
Cermet	SV	SN	SC	SA	SK

“L” Portion of Item No. (Lead-in Recommendation)

ISO Material	T	F	N	G	L	A	V
P			●	●		◐	○
S	●			◐			
M				●	◐		
H			◐	●			
K	○			●			◐
N				●		●	◐

● Best ◐ Better ○ Good

Ordering Example:
The customer needs the following:

- Metric shank
- Carbide
- TiN coating
- F lead-in
- 30.60mm diameter
- Blind hole

2441-KNF-030600

Metric Shank | Carbide w/ TiN coating | F Lead-in | Diameter

C: 62 - 73 | C: 54 - 61 | C: 75

Key on C: 1

Monobloc Reamers

3620 Series | Short Length | Diameter Range: 0.2283” - 1.2638” (5.80mm - 32.10mm)

Series	3620
Flute	Straight
Type	Through Holes
Coolant	Radial

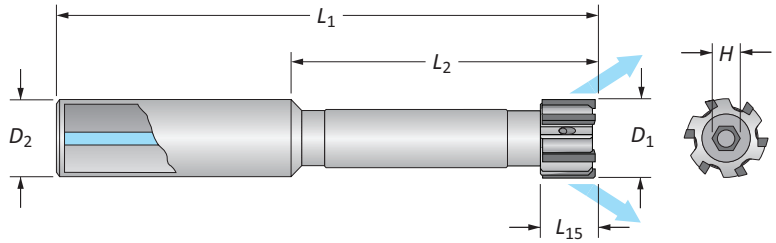

Inch Shank Part No. 93620-CGL-D_1					Metric Shank Part No. 3620-CGL-D_1						
D_1 Range	L_{15}	L_2	L_1	D_2	D_1 Range	L_{15}	L_2	L_1	D_2	No. of Teeth	H (mm)
0.2283 - 0.2598	0.315	1.575	3.071	0.500	5.80 - 6.60	8	40	78	12	4	2
0.2599 - 0.2992	0.315	1.575	3.071	0.500	6.61 - 7.60	8	40	78	12	4	2
0.2993 - 0.3386	0.394	1.575	3.071	0.500	7.61 - 8.60	10	40	78	12	4	2.5
0.3387 - 0.3780	0.394	1.969	3.465	0.500	8.61 - 9.60	10	50	88	12	4	2.5
0.3781 - 0.4173	0.394	1.969	3.740	0.500	9.61 - 10.60	10	50	95	12	6	3
0.4174 - 0.4567	0.394	1.969	3.740	0.500	10.61 - 11.60	10	50	95	12	6	3
0.4568 - 0.4961	0.394	1.969	3.740	0.500	11.61 - 12.60	10	50	95	12	6	3
0.4962 - 0.5354	0.394	1.969	3.740	0.500	12.61 - 13.60	10	50	95	12	6	4
0.5355 - 0.5748	0.394	1.969	3.740	0.500	13.61 - 14.60	10	50	95	12	6	4
0.5749 - 0.6142	0.394	1.969	3.740	0.500	14.61 - 15.60	10	50	95	12	6	4
0.6143 - 0.6535	0.394	1.969	3.937	0.625	15.61 - 16.60	10	50	100	16	6	4
0.6536 - 0.6929	0.394	1.969	3.937	0.625	16.61 - 17.60	10	50	100	16	6	5
0.6930 - 0.7323	0.472	1.969	3.937	0.625	17.61 - 18.60	12	50	100	16	6	5
0.7324 - 0.7520	0.472	2.362	4.724	0.750	18.61 - 19.10	12	60	120	20	6	5
0.7521 - 0.7913	0.472	2.362	4.724	0.750	19.11 - 20.10	12	60	120	20	6	5
0.7914 - 0.8307	0.472	2.362	4.724	0.750	20.11 - 21.10	12	60	120	20	6	5
0.8308 - 0.8701	0.472	2.362	4.724	0.750	21.11 - 22.10	12	60	120	20	6	6
0.8702 - 0.9094	0.472	2.362	4.724	0.750	22.11 - 23.10	12	60	120	20	6	6
0.9095 - 0.9488	0.472	2.362	4.724	0.750	23.11 - 24.10	12	60	120	20	6	6
0.9489 - 0.9882	0.472	2.362	4.724	0.750	24.11 - 25.10	12	60	120	20	6	6
0.9883 - 1.0276	0.472	2.953	5.315	1.000	25.11 - 26.10	16	70	135	25	6	6
1.0277 - 1.0669	0.551	2.953	5.315	1.000	26.11 - 27.10	16	70	135	25	6	6
1.0670 - 1.1063	0.551	2.953	5.315	1.000	27.11 - 28.10	16	70	135	25	6	8
1.1064 - 1.1457	0.551	2.953	5.315	1.000	28.11 - 29.10	16	70	135	25	6	8
1.1458 - 1.1850	0.551	2.953	5.315	1.000	29.11 - 30.10	16	70	135	25	6	8
1.1851 - 1.2244	0.551	2.953	5.315	1.000	30.11 - 31.10	16	70	135	25	6	8
1.2245 - 1.2638	0.551	2.953	5.315	1.000	31.11 - 32.10	16	70	135	25	6	8

“CG” Portion of Item No. (Coating and Substrate Code)

Grade	Uncoated	TiN	TiCN	TiAlN	Alcrona
Carbide	KL	KN	KC	KA	KK
Cermet	SV	SN	SC	SA	SK

“L” Portion of Item No. (Lead-in Recommendation)

ISO Material	T	F	N	G	L	A	V
P			●	●		◐	○
S	●			◐			
M				●	◐		
H			◐	●			
K	○			●			◐
N				●		●	◐

● Best ◐ Better ○ Good

C: 62 - 73

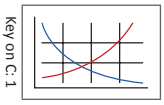

C: 54 - 61

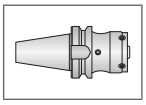

C: 75

Ordering Example:
The customer needs the following:

- Metric shank
- Carbide
- TiN coating
- F lead-in
- 30.60mm diameter
- Through hole

3620-KNF-030600

Metric Shank | Carbide w/ TiN coating | F Lead-in | Diameter

Monobloc Reamers

3627 Series | Short Length | Diameter Range: 0.2283” - 1.2638” (5.80mm - 32.10mm)

Series	3627
Flute	Helical
Type	Through Holes
Coolant	Radial

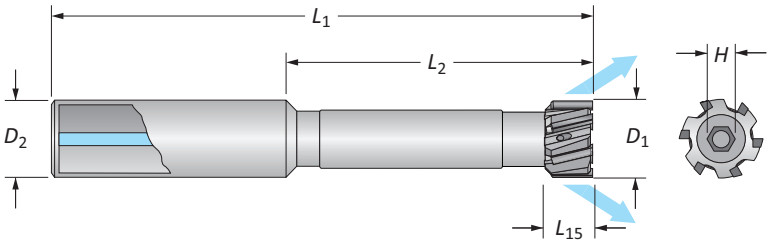

Inch Shank Part No. 93627-CGL-D_1					Metric Shank Part No. 3627-CGL-D_1						
D_1 Range	L_{15}	L_2	L_1	D_2	D_1 Range	L_{15}	L_2	L_1	D_2	No. of Teeth	H (mm)
0.2283 - 0.2598	0.315	1.575	3.150	0.500	5.80 - 6.60	8	40	80	12	4	2
0.2599 - 0.2992	0.315	1.575	3.150	0.500	6.61 - 7.60	8	40	80	12	4	2
0.2993 - 0.3386	0.394	1.575	3.150	0.500	7.61 - 8.60	10	40	80	12	4	2.5
0.3387 - 0.3780	0.394	1.969	3.543	0.500	8.61 - 9.60	10	50	90	12	4	2.5
0.3781 - 0.4173	0.394	1.969	3.740	0.500	9.61 - 10.60	10	50	95	12	6	3
0.4174 - 0.4567	0.394	2.362	4.134	0.500	10.61 - 11.60	10	60	105	12	6	3
0.4568 - 0.4961	0.394	2.362	4.134	0.500	11.61 - 12.60	10	60	105	12	6	3
0.4962 - 0.5354	0.394	2.362	4.134	0.500	12.61 - 13.60	10	60	105	12	6	4
0.5355 - 0.5748	0.394	2.756	4.528	0.500	13.61 - 14.60	10	70	115	12	6	4
0.5749 - 0.6142	0.394	2.756	4.528	0.500	14.61 - 15.60	10	70	115	12	6	4
0.6143 - 0.6535	0.394	3.150	5.118	0.625	15.61 - 16.60	10	80	130	16	6	4
0.6536 - 0.6929	0.394	3.150	5.118	0.625	16.61 - 17.60	10	80	130	16	6	5
0.6930 - 0.7323	0.472	3.543	5.512	0.625	17.61 - 18.60	12	90	140	16	6	5
0.7324 - 0.7520	0.472	3.543	5.906	0.750	18.61 - 19.10	12	90	150	20	6	5
0.7521 - 0.7913	0.472	3.937	6.299	0.750	19.11 - 20.10	12	100	160	20	6	5
0.7914 - 0.8307	0.472	3.937	6.299	0.750	20.11 - 21.10	12	100	160	20	6	5
0.8308 - 0.8701	0.472	3.937	6.299	0.750	21.11 - 22.10	12	100	160	20	6	6
0.8702 - 0.9094	0.472	3.937	6.299	0.750	22.11 - 23.10	12	100	160	20	6	6
0.9095 - 0.9488	0.472	3.937	6.299	0.750	23.11 - 24.10	12	100	160	20	6	6
0.9489 - 0.9882	0.472	3.937	6.299	0.750	24.11 - 25.10	12	100	160	20	6	6
0.9883 - 1.0276	0.472	4.331	6.693	1.000	25.11 - 26.10	16	110	170	25	6	6
1.0277 - 1.0669	0.551	4.331	6.693	1.000	26.11 - 27.10	16	110	170	25	6	6
1.0670 - 1.1063	0.551	4.331	6.693	1.000	27.11 - 28.10	16	110	170	25	6	8
1.1064 - 1.1457	0.551	4.331	6.693	1.000	28.11 - 29.10	16	110	170	25	6	8
1.1458 - 1.1850	0.551	4.331	6.693	1.000	29.11 - 30.10	16	110	170	25	6	8
1.1851 - 1.2244	0.551	4.331	6.693	1.000	30.11 - 31.10	16	110	170	25	6	8
1.2245 - 1.2638	0.551	4.331	6.693	1.000	31.11 - 32.10	16	110	170	25	6	8

“CG” Portion of Item No. (Coating and Substrate Code)

Grade	Uncoated	TiN	TiCN	TiAlN	Alcrona
Carbide	KL	KN	KC	KA	KK
Cermet	SV	SN	SC	SA	SK

“L” Portion of Item No. (Lead-in Recommendation)

ISO Material	T	F	N	G	L	A	V
P			●	●		◐	○
S	●			◐			
M				●	◐		
H			◐	●			
K	○			●			◐
N				●		●	◐

● Best ◐ Better ○ Good

Ordering Example:
The customer needs the following:

- Metric shank
- Carbide
- TiN coating
- F lead-in
- 30.60mm diameter
- Through hole

3627-KNF-030600

Metric Shank | Carbide w/ TiN coating | F Lead-in | Diameter

C: 62 - 73 C: 54 - 61 C: 75

Key on C: 1

Monobloc Reamers

2430 Series | Long length | Diameter range: 0.2283” - 1.2638” (5.80mm - 32.10mm)

Series	2430
Flute	Straight
Type	Blind or Through Holes
Coolant	None

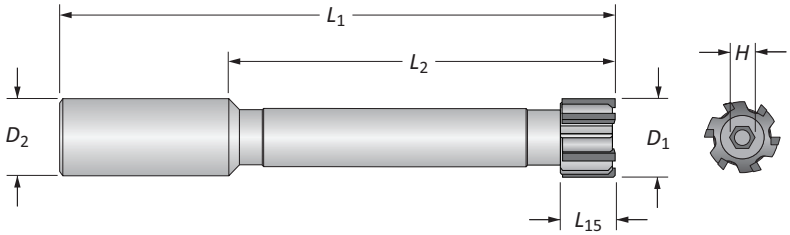

Inch Shank Part No. 92430-CGL-D_1					Metric Shank Part No. 2430-CGL-D_1						
D_1 Range	L_{15}	L_2	L_1	D_2	D_1 Range	L_{15}	L_2	L_1	D_2	No. of Teeth	H (mm)
0.2283 - 0.2598	0.315	3.346	4.843	0.500	5.80 - 6.60	8	85	123	12	4	2
0.2599 - 0.2992	0.315	3.346	4.843	0.500	6.61 - 7.60	8	85	123	12	4	2
0.2993 - 0.3386	0.394	3.346	4.843	0.500	7.61 - 8.60	10	85	123	12	4	2.5
0.3387 - 0.3780	0.394	3.346	4.843	0.500	8.61 - 9.60	10	85	123	12	4	2.5
0.3781 - 0.4173	0.394	4.528	6.299	0.500	9.61 - 10.60	10	115	160	12	6	3
0.4174 - 0.4567	0.394	4.528	6.299	0.500	10.61 - 11.60	10	115	160	12	6	3
0.4568 - 0.4961	0.394	4.528	6.299	0.500	11.61 - 12.60	10	115	160	12	6	3
0.4962 - 0.5354	0.394	4.528	6.299	0.500	12.61 - 13.60	10	115	160	12	6	4
0.5355 - 0.5748	0.394	4.528	6.299	0.500	13.61 - 14.60	10	115	160	12	6	4
0.5749 - 0.6142	0.394	4.528	6.299	0.500	14.61 - 15.60	10	115	160	12	6	4
0.6143 - 0.6535	0.394	5.118	7.087	0.625	15.61 - 16.60	10	130	180	16	6	4
0.6536 - 0.6929	0.394	5.118	7.087	0.625	16.61 - 17.60	10	130	180	16	6	5
0.6930 - 0.7323	0.472	5.118	7.087	0.625	17.61 - 18.60	12	130	180	16	6	5
0.7324 - 0.7520	0.472	5.512	7.874	0.750	18.61 - 19.10	12	140	200	20	6	5
0.7521 - 0.7913	0.472	5.512	7.874	0.750	19.11 - 20.10	12	140	200	20	6	5
0.7914 - 0.8307	0.472	5.512	7.874	0.750	20.11 - 21.10	12	140	200	20	6	5
0.8308 - 0.8701	0.472	5.512	7.874	0.750	21.11 - 22.10	12	140	200	20	6	6
0.8702 - 0.9094	0.472	5.512	7.874	0.750	22.11 - 23.10	12	140	200	20	6	6
0.9095 - 0.9488	0.472	5.512	7.874	0.750	23.11 - 24.10	12	140	200	20	6	6
0.9489 - 0.9882	0.472	5.512	7.874	0.750	24.11 - 25.10	12	140	200	20	6	6
0.9883 - 1.0276	0.472	5.906	8.268	1.000	25.11 - 26.10	16	150	210	25	6	6
1.0277 - 1.0669	0.551	5.906	8.268	1.000	26.11 - 27.10	16	150	210	25	6	6
1.0670 - 1.1063	0.551	5.906	8.268	1.000	27.11 - 28.10	16	150	210	25	6	8
1.1064 - 1.1457	0.551	5.906	8.268	1.000	28.11 - 29.10	16	150	210	25	6	8
1.1458 - 1.1850	0.551	5.906	8.268	1.000	29.11 - 30.10	16	150	210	25	6	8
1.1851 - 1.2244	0.551	5.906	8.268	1.000	30.11 - 31.10	16	150	210	25	6	8
1.2245 - 1.2638	0.551	5.906	8.268	1.000	31.11 - 32.10	16	150	210	25	6	8

“CG” Portion of Item No. (Coating and Substrate Code)

Grade	Uncoated	TiN	TiCN	TiAlN	Alcrona
Carbide	KL	KN	KC	KA	KK
Cermet	SV	SN	SC	SA	SK

“L” Portion of Item No. (Lead-in Recommendation)

ISO Material	T	F	N	G	L	A	V
P			●	●		◐	○
S	●			◐			
M				●	◐		
H			◐	●			
K	○			●			◐
N				●		●	◐

● Best ◐ Better ○ Good

Ordering Example:
The customer needs the following:

- Metric shank
- Carbide
- TiN coating
- F lead-in
- 30.60mm diameter
- Blind hole
- Flood coolant

2430-KNF-030600

Metric Shank | Carbide w/ TiN coating | F Lead-in | Diameter

C: 62 - 73

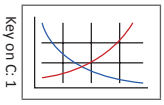

C: 54 - 61

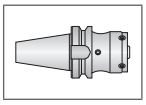

C: 75

Monobloc Reamers

2431 Series | Long Length | Diameter Range: 0.2283” - 1.2638” (5.80mm - 32.10mm)

Series	2431
Flute	Straight
Type	Blind Holes
Coolant	Central

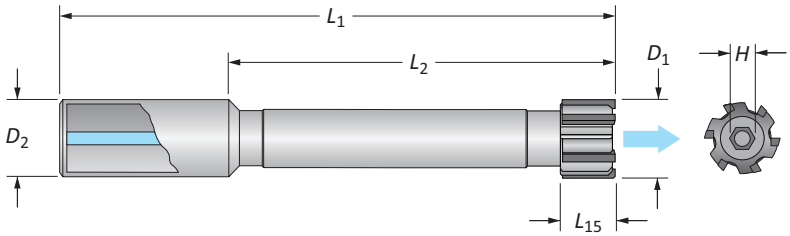

Inch Shank Part No. 92431-CGL-D_1					Metric Shank Part No. 2431-CGL-D_1						
D_1 Range	L_{15}	L_2	L_1	D_2	D_1 Range	L_{15}	L_2	L_1	D_2	No. of Teeth	H (mm)
0.2283 - 0.2598	0.315	3.346	4.843	0.500	5.80 - 6.60	8	85	123	12	4	2
0.2599 - 0.2992	0.315	3.346	4.843	0.500	6.61 - 7.60	8	85	123	12	4	2
0.2993 - 0.3386	0.394	3.346	4.843	0.500	7.61 - 8.60	10	85	123	12	4	2.5
0.3387 - 0.3780	0.394	3.346	4.843	0.500	8.61 - 9.60	10	85	123	12	4	2.5
0.3781 - 0.4173	0.394	4.528	6.299	0.500	9.61 - 10.60	10	115	160	12	6	3
0.4174 - 0.4567	0.394	4.528	6.299	0.500	10.61 - 11.60	10	115	160	12	6	3
0.4568 - 0.4961	0.394	4.528	6.299	0.500	11.61 - 12.60	10	115	160	12	6	3
0.4962 - 0.5354	0.394	4.528	6.299	0.500	12.61 - 13.60	10	115	160	12	6	4
0.5355 - 0.5748	0.394	4.528	6.299	0.500	13.61 - 14.60	10	115	160	12	6	4
0.5749 - 0.6142	0.394	4.528	6.299	0.500	14.61 - 15.60	10	115	160	12	6	4
0.6143 - 0.6535	0.394	5.118	7.087	0.625	15.61 - 16.60	10	130	180	16	6	4
0.6536 - 0.6929	0.394	5.118	7.087	0.625	16.61 - 17.60	10	130	180	16	6	5
0.6930 - 0.7323	0.472	5.118	7.087	0.625	17.61 - 18.60	12	130	180	16	6	5
0.7324 - 0.7520	0.472	5.512	7.874	0.750	18.61 - 19.10	12	140	200	20	6	5
0.7521 - 0.7913	0.472	5.512	7.874	0.750	19.11 - 20.10	12	140	200	20	6	5
0.7914 - 0.8307	0.472	5.512	7.874	0.750	20.11 - 21.10	12	140	200	20	6	5
0.8308 - 0.8701	0.472	5.512	7.874	0.750	21.11 - 22.10	12	140	200	20	6	6
0.8702 - 0.9094	0.472	5.512	7.874	0.750	22.11 - 23.10	12	140	200	20	6	6
0.9095 - 0.9488	0.472	5.512	7.874	0.750	23.11 - 24.10	12	140	200	20	6	6
0.9489 - 0.9882	0.472	5.512	7.874	0.750	24.11 - 25.10	12	140	200	20	6	6
0.9883 - 1.0276	0.472	5.906	8.268	1.000	25.11 - 26.10	16	150	210	25	6	6
1.0277 - 1.0669	0.551	5.906	8.268	1.000	26.11 - 27.10	16	150	210	25	6	6
1.0670 - 1.1063	0.551	5.906	8.268	1.000	27.11 - 28.10	16	150	210	25	6	8
1.1064 - 1.1457	0.551	5.906	8.268	1.000	28.11 - 29.10	16	150	210	25	6	8
1.1458 - 1.1850	0.551	5.906	8.268	1.000	29.11 - 30.10	16	150	210	25	6	8
1.1851 - 1.2244	0.551	5.906	8.268	1.000	30.11 - 31.10	16	150	210	25	6	8
1.2245 - 1.2638	0.551	5.906	8.268	1.000	31.11 - 32.10	16	150	210	25	6	8

“CG” Portion of Item No. (Coating and Substrate Code)

Grade	Uncoated	TiN	TiCN	TiAlN	Alcrona
Carbide	KL	KN	KC	KA	KK
Cermet	SV	SN	SC	SA	SK

“L” Portion of Item No. (Lead-in Recommendation)

ISO Material	T	F	N	G	L	A	V
P			●	●		◐	○
S	●			◐			
M				●	◐		
H			◐	●			
K	○			●			◐
N				●		●	◐

● Best ◐ Better ○ Good

Ordering Example:
The customer needs the following:

- Metric shank
- Carbide
- TiN coating
- F lead-in
- 30.60mm diameter
- Blind hole

2431-KNF-030600

Metric Shank | Carbide w/ TiN coating | F Lead-in | Diameter

C: 62 - 73

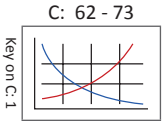

Key on C: 1

C: 54 - 61

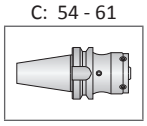

C: 75

Monobloc Reamers

3610 Series | Long Length | Diameter Range: 0.2283” - 1.2638” (5.80mm - 32.10mm)

Series	3610
Flute	Straight
Type	Through Holes
Coolant	Radial

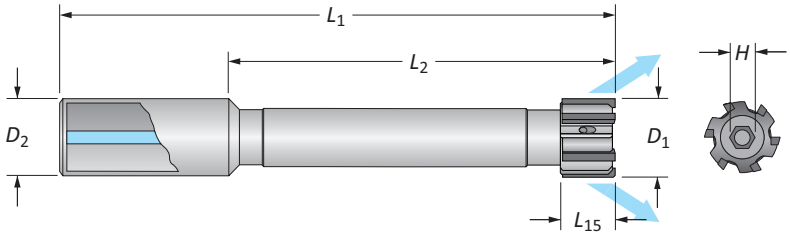

Inch Shank Part No. 93610-CGL-D_1					Metric Shank Part No. 3610-CGL-D_1						
D_1 Range	L_{15}	L_2	L_1	D_2	D_1 Range	L_{15}	L_2	L_1	D_2	No. of Teeth	H (mm)
0.2283 - 0.2598	0.315	3.346	4.843	0.500	5.80 - 6.60	8	85	123	12	4	2
0.2599 - 0.2992	0.315	3.346	4.843	0.500	6.61 - 7.60	8	85	123	12	4	2
0.2993 - 0.3386	0.394	3.346	4.843	0.500	7.61 - 8.60	10	85	123	12	4	2.5
0.3387 - 0.3780	0.394	3.346	4.843	0.500	8.61 - 9.60	10	85	123	12	4	2.5
0.3781 - 0.4173	0.394	4.528	6.299	0.500	9.61 - 10.60	10	115	160	12	6	3
0.4174 - 0.4567	0.394	4.528	6.299	0.500	10.61 - 11.60	10	115	160	12	6	3
0.4568 - 0.4961	0.394	4.528	6.299	0.500	11.61 - 12.60	10	115	160	12	6	3
0.4962 - 0.5354	0.394	4.528	6.299	0.500	12.61 - 13.60	10	115	160	12	6	4
0.5355 - 0.5748	0.394	4.528	6.299	0.500	13.61 - 14.60	10	115	160	12	6	4
0.5749 - 0.6142	0.394	4.528	6.299	0.500	14.61 - 15.60	10	115	160	12	6	4
0.6143 - 0.6535	0.394	5.118	7.087	0.625	15.61 - 16.60	10	130	180	16	6	4
0.6536 - 0.6929	0.394	5.118	7.087	0.625	16.61 - 17.60	10	130	180	16	6	5
0.6930 - 0.7323	0.472	5.118	7.087	0.625	17.61 - 18.60	12	130	180	16	6	5
0.7324 - 0.7520	0.472	5.512	7.874	0.750	18.61 - 19.10	12	140	200	20	6	5
0.7521 - 0.7913	0.472	5.512	7.874	0.750	19.11 - 20.10	12	140	200	20	6	5
0.7914 - 0.8307	0.472	5.512	7.874	0.750	20.11 - 21.10	12	140	200	20	6	5
0.8308 - 0.8701	0.472	5.512	7.874	0.750	21.11 - 22.10	12	140	200	20	6	6
0.8702 - 0.9094	0.472	5.512	7.874	0.750	22.11 - 23.10	12	140	200	20	6	6
0.9095 - 0.9488	0.472	5.512	7.874	0.750	23.11 - 24.10	12	140	200	20	6	6
0.9489 - 0.9882	0.472	5.512	7.874	0.750	24.11 - 25.10	12	140	200	20	6	6
0.9883 - 1.0276	0.472	5.906	8.268	1.000	25.11 - 26.10	16	150	210	25	6	6
1.0277 - 1.0669	0.551	5.906	8.268	1.000	26.11 - 27.10	16	150	210	25	6	6
1.0670 - 1.1063	0.551	5.906	8.268	1.000	27.11 - 28.10	16	150	210	25	6	8
1.1064 - 1.1457	0.551	5.906	8.268	1.000	28.11 - 29.10	16	150	210	25	6	8
1.1458 - 1.1850	0.551	5.906	8.268	1.000	29.11 - 30.10	16	150	210	25	6	8
1.1851 - 1.2244	0.551	5.906	8.268	1.000	30.11 - 31.10	16	150	210	25	6	8
1.2245 - 1.2638	0.551	5.906	8.268	1.000	31.11 - 32.10	16	150	210	25	6	8

“CG” Portion of Item No. (Coating and Substrate Code)

Grade	Uncoated	TiN	TiCN	TiAlN	Alcrona
Carbide	KL	KN	KC	KA	KK
Cermet	SV	SN	SC	SA	SK

“L” Portion of Item No. (Lead-in Recommendation)

ISO Material	T	F	N	G	L	A	V
P			●	●		◐	○
S	●			◐			
M				●	◐		
H			◐	●			
K	○			●			◐
N				●		●	◐

● Best ◐ Better ○ Good

Ordering Example:
The customer needs the following:

- Metric shank
- Carbide
- TiN coating
- F lead-in
- 30.60mm diameter
- Through hole

3610-KNF-030600

Metric Shank | Carbide w/ TiN coating | F Lead-in | Diameter

C: 62 - 73

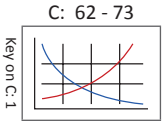

C: 54 - 61

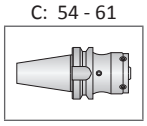

C: 75

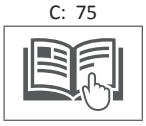

Monobloc Reamers

3617 Series | Long Length | Diameter Range: 0.2283” - 1.2638” (5.80mm - 32.10mm)

Series	3617
Flute	Helical
Type	Through Holes
Coolant	Radial

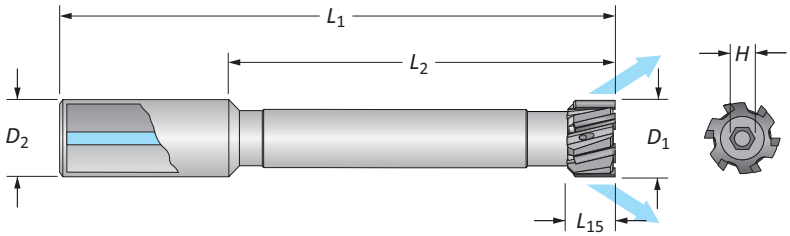

Inch Shank Part No. 93617-CGL-D_1					Metric Shank Part No. 3617-CGL-D_1						
D_1 Range	L_{15}	L_2	L_1	D_2	D_1 Range	L_{15}	L_2	L_1	D_2	No. of Teeth	H (mm)
0.2283 - 0.2598	0.315	3.346	4.843	0.500	5.80 - 6.60	8	85	123	12	4	2
0.2599 - 0.2992	0.315	3.346	4.843	0.500	6.61 - 7.60	8	85	123	12	4	2
0.2993 - 0.3386	0.394	3.346	4.843	0.500	7.61 - 8.60	10	85	123	12	4	2.5
0.3387 - 0.3780	0.394	3.346	4.843	0.500	8.61 - 9.60	10	85	123	12	4	2.5
0.3781 - 0.4173	0.394	4.528	6.299	0.500	9.61 - 10.60	10	115	160	12	6	3
0.4174 - 0.4567	0.394	4.528	6.299	0.500	10.61 - 11.60	10	115	160	12	6	3
0.4568 - 0.4961	0.394	4.528	6.299	0.500	11.61 - 12.60	10	115	160	12	6	3
0.4962 - 0.5354	0.394	4.528	6.299	0.500	12.61 - 13.60	10	115	160	12	6	4
0.5355 - 0.5748	0.394	4.528	6.299	0.500	13.61 - 14.60	10	115	160	12	6	4
0.5749 - 0.6142	0.394	4.528	6.299	0.500	14.61 - 15.60	10	115	160	12	6	4
0.6143 - 0.6535	0.394	5.118	7.087	0.625	15.61 - 16.60	10	130	180	16	6	4
0.6536 - 0.6929	0.394	5.118	7.087	0.625	16.61 - 17.60	10	130	180	16	6	5
0.6930 - 0.7323	0.472	5.118	7.087	0.625	17.61 - 18.60	12	130	180	16	6	5
0.7324 - 0.7520	0.472	5.512	7.874	0.750	18.61 - 19.10	12	140	200	20	6	5
0.7521 - 0.7913	0.472	5.512	7.874	0.750	19.11 - 20.10	12	140	200	20	6	5
0.7914 - 0.8307	0.472	5.512	7.874	0.750	20.11 - 21.10	12	140	200	20	6	5
0.8308 - 0.8701	0.472	5.512	7.874	0.750	21.11 - 22.10	12	140	200	20	6	6
0.8702 - 0.9094	0.472	5.512	7.874	0.750	22.11 - 23.10	12	140	200	20	6	6
0.9095 - 0.9488	0.472	5.512	7.874	0.750	23.11 - 24.10	12	140	200	20	6	6
0.9489 - 0.9882	0.472	5.512	7.874	0.750	24.11 - 25.10	12	140	200	20	6	6
0.9883 - 1.0276	0.472	5.906	8.268	1.000	25.11 - 26.10	16	150	210	25	6	6
1.0277 - 1.0669	0.551	5.906	8.268	1.000	26.11 - 27.10	16	150	210	25	6	6
1.0670 - 1.1063	0.551	5.906	8.268	1.000	27.11 - 28.10	16	150	210	25	6	8
1.1064 - 1.1457	0.551	5.906	8.268	1.000	28.11 - 29.10	16	150	210	25	6	8
1.1458 - 1.1850	0.551	5.906	8.268	1.000	29.11 - 30.10	16	150	210	25	6	8
1.1851 - 1.2244	0.551	5.906	8.268	1.000	30.11 - 31.10	16	150	210	25	6	8
1.2245 - 1.2638	0.551	5.906	8.268	1.000	31.11 - 32.10	16	150	210	25	6	8

“CG” Portion of Item No. (Coating and Substrate Code)

Grade	Uncoated	TiN	TiCN	TiAlN	Alcrona
Carbide	KL	KN	KC	KA	KK
Cermet	SV	SN	SC	SA	SK

“L” Portion of Item No. (Lead-in Recommendation)

ISO Material	T	F	N	G	L	A	V
P			●	●		◐	○
S	●			◐			
M				●	◐		
H			◐	●			
K	○			●			◐
N				●		●	◐

● Best ◐ Better ○ Good

C: 62 - 73

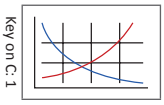

Key on C: 1

C: 54 - 61

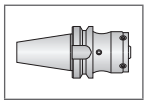

C: 75

Ordering Example:

The customer needs the following:

- Metric shank
- Carbide
- TiN coating
- F lead-in
- 30.60mm diameter
- Through hole

3617-KNF-030600

Metric Shank | Carbide w/ TiN coating | F Lead-in | Diameter

Cutting Ring Style Reamers

Product Overview

Cutting Ring Reamer Features
• Diameter range: 0.6929” - 7.8972” (17.60mm - 200.59mm) • Available with straight or left hand helical flutes • Expandable up to 4% of nominal diameter • Mandrels are available for both through holes or blind holes • Work day lead time 20 - 25 days • Available for recondition

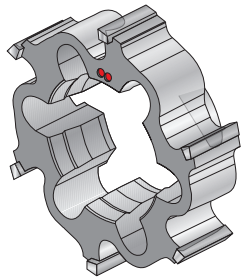

Straight Flute

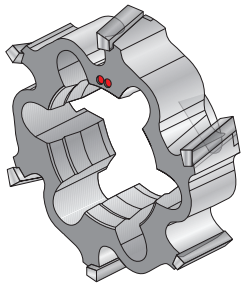

Left Hand Helical Flute

Uncoated

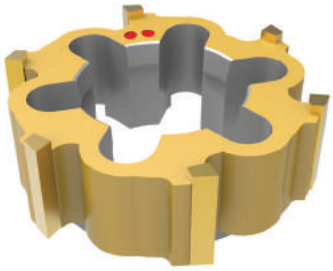

TiN Coated

TiAlN Coated

TiCN Coated

Alcrona Coated

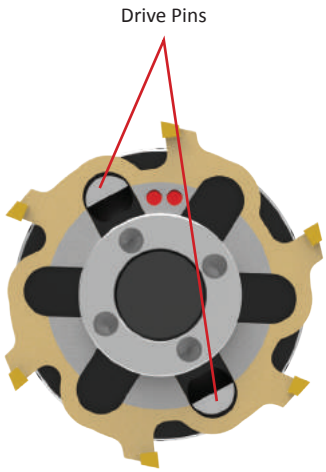

Product Nomenclature

Cutting Rings

I	–	2ANC-KT	F	–	019686	+	0000	–	0005
1		2	3		4		5		

NOTE: If diameter and tolerance are specified in inch units, put an "**I**" at the beginning of the item number

1. Cutting Ring

Blank = Metric diameter

I = Inch diameter

2. Coating and Substrate

2000-KT = Uncoated carbide

2TIN-KT = TiN coated carbide

2TIC-KT = TiCN coated carbide

2TIA-KT = TiAlN coated carbide

2TLK-KT = Alcrona coated carbide

2AVC-ST = Uncoated cermet

2ANC-ST = TiN coated cermet

2ACC-ST = TiCN coated cermet

2AAC-ST = TiAlN coated cermet

2ALK-ST = Alcrona coated cermet

3. Lead-in

E, M, K = Left hand helical flute

A, F, G, L, N, T, V = Straight flute

J, W, X, Y = Straight Flute with chipbreaker

4. Diameter

XX.XXXX = Inch

XXX.XXX = Metric

5. Tolerance

4 decimal places = inch tolerance

3 decimal places = mm tolerance

*The total tolerance capable is 0.0002" (0.005mm)

Reference Key

Symbol	Attribute
D_1	Reamer diameter
D_2	Shank diameter
D_3	Maximum conical ring diameter
L_1	Overall length
L_2	Length of cut
L_5	Maximum overhang
L_7	Shank length
L_{15}	Flute length

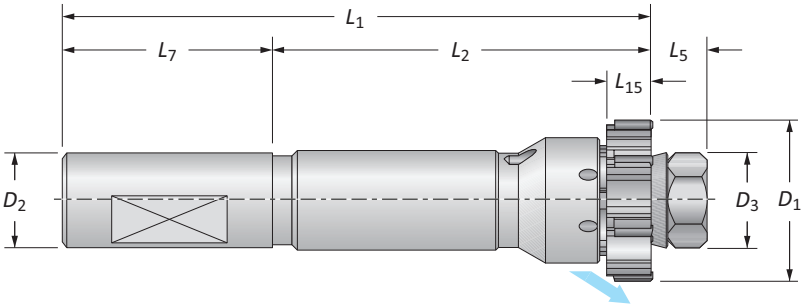

Building Your Complete Tool

You will need both pieces to complete your ring style reamer assembly. There is a guide on the page where the rings are located. You must follow the guide to build the item number for the reamer ring that you need.

However, the complete mandrel item numbers are listed on their respective pages. You do not need to build the mandrel numbers.

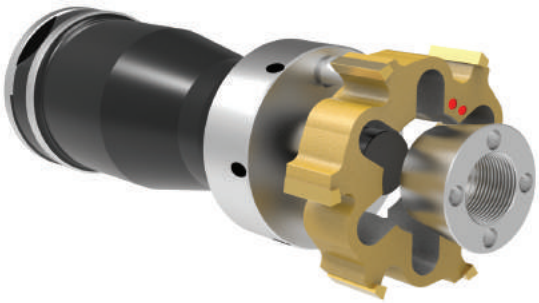

1

Select Your Ring

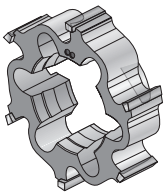

2

Select Your Mandrel

Cutting Rings

Imperial (inch) | Diameter Range: 0.6929” - 7.8976”

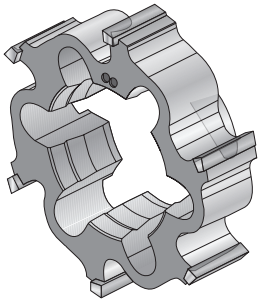

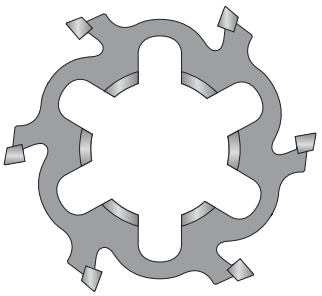

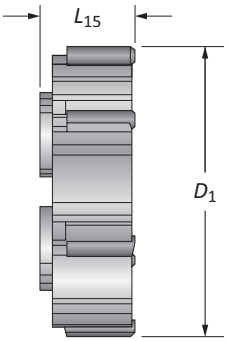

D_1 Range Imperial (inch)	L_{15} Straight Flute	L_{15} Helical Flute	Number of Teeth
0.6929 - 0.8503	0.433	–	6
0.8504 - 1.0078	0.472	–	6
1.0079 - 1.2834	0.551	–	6
1.2835 - 1.7952	0.630	0.630	6
1.7953 - 3.1338	0.728	0.728	6
3.1339 - 3.9605	0.728	0.728	8
3.9606 - 4.3542	0.728	0.728	10
4.3543 - 7.8976	0.728	0.728	12

I 2ANC-STF-019686

- I — Imperial Item
- 2ANC-ST — Cermet w/ TiN Coating
- F — F Lead-in
- 019686 — Diameter (D_1)

Coating and Substrate Codes

Grade	Uncoated	TiN	TiCN	TiAlN	Alcrona
Carbide	2000-KT	2TIN-KT	2TIC-KT	2TIA-KT	2TLK-KK
Cermet	2AVC-ST	2ANC-ST	2ACC-ST	2AAC-ST	2ALK-SK

Lead-in Recommendations

ISO Material	T	F	N	G	L	A	V
P			●	●		◐	○
S	●			◐			
M				●	◐		
H			◐	●			
K	○			●			◐
N				●		●	◐

● Best ◐ Better ○ Good

C: 62 - 73 C: 34 - 53 C: 54 - 61 C: 76

Key on C: 1

Cutting Rings

Metric (mm) | Diameter Range: 17.600mm - 200.600mm

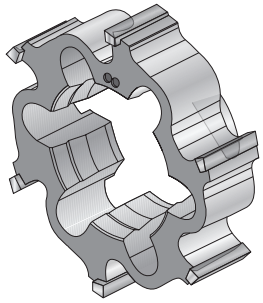

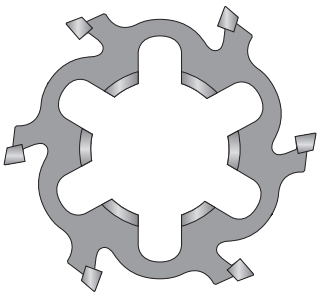

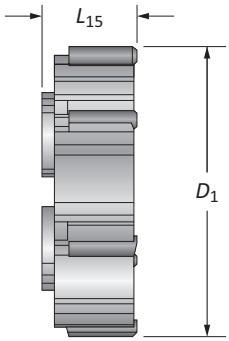

D_1 Range Metric (mm)	L_{15} Straight Flute	L_{15} Helical Flute	Number of Teeth
17.600 - 21.599	11.00	–	6
21.600 - 25.599	12.00	–	6
25.600 - 32.599	14.00	–	6
32.600 - 45.599	16.00	16.00	6
45.600 - 79.599	18.50	18.50	6
79.600 - 100.599	18.50	18.50	8
100.600 - 110.599	18.50	18.50	10
110.600 - 200.600	18.50	18.50	12

2ANC-STF-019686

- 2ANC-ST: Cermet w/ TiN Coating
- F: F Lead-in
- 019686: Diameter (D_1)

Coating and Substrate Codes

Grade	Uncoated	TiN	TiCN	TiAlN	Alcrona
Carbide	2000-KT	2TIN-KT	2TIC-KT	2TIA-KT	2TLK-KK
Cermet	2AVC-ST	2ANC-ST	2ACC-ST	2AAC-ST	2ALK-SK

Lead-in Recommendations

ISO Material	T	F	N	G	L	A	V
P			●	●		◐	○
S	●			◐			
M				●	◐		
H			◐	●			
K	○			●			◐
N				●		●	◐

● Best ◐ Better ○ Good

C: 62 - 73 | C: 34 - 53 | C: 54 - 61 | C: 76

Key on C: 1

A DRILLING
B BORING
C REAMING
D BURNISHING
E THREADING
X SPECIALS

Ring Style Mandrels

4550 Series | Short Length | Diameter Range: 0.6929” - 3.9602” (17.60mm - 100.59mm)

Series	4550
Shank Type	Cylindrical
Application	Through Holes
Coolant	Radial

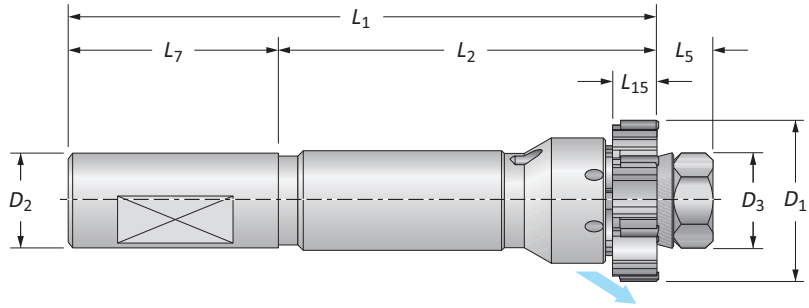

	D_1 Range	Mandrel D_3	Mandrel L_5	Mandrel L_{15}	Mandrel L_2	Mandrel L_1	Shank L_7	Shank D_2	Teeth	Part No. (Complete Mandrel*) With Flat	Part No. (Complete Mandrel*) Without Flat
i	0.6929 - 0.8503	0.472	0.433	0.433	3.189	5.591	1.969	0.750	6	**94550-MC-010**	**94550A-MC-010**
	0.8504 - 1.0078	0.472	0.433	0.472	3.189	5.591	1.969	0.750	6	**94550-MC-020**	**94550A-MC-020**
	1.0079 - 1.2834	0.614	0.433	0.551	4.016	6.417	1.969	0.750	6	**94550-MC-030**	**94550A-MC-030**
	1.2835 - 1.5983	0.866	0.551	0.630	4.016	6.772	2.205	1.000	6	**94550-MC-040**	**94550A-MC-040**
	1.5984 - 1.7952	1.000	0.591	0.630	4.016	6.811	2.205	1.000	6	**94550-MC-050**	**94550A-MC-050**
	1.7953 - 1.9527	1.181	0.807	0.728	4.134	7.303	2.362	1.250	6	**94550-MC-060**	**94550A-MC-060**
	1.9528 - 2.3857	1.181	0.807	0.728	4.134	7.303	2.362	1.250	6	**94550-MC-070**	**94550A-MC-070**
	2.3858 - 2.7794	1.575	0.965	0.728	4.134	7.461	2.362	1.250	6	**94550-MC-080**	**94550A-MC-080**
	2.7795 - 3.1338	1.575	0.965	0.728	4.134	7.461	2.362	1.250	6	**94550-MC-090**	**94550A-MC-090**
	3.1339 - 3.5668	2.205	1.122	0.728	4.134	8.012	2.756	1.500	8	**94550-MC-100**	**94550A-MC-100**
	3.5669 - 3.9602	2.205	1.122	0.728	4.134	8.012	2.756	1.500	8	**94550-MC-110**	**94550A-MC-110**
m	17.60 - 21.59	12	11	11	81	142	50	20	6	**4550-MC-010**	**4550A-MC-010**
	21.60 - 25.59	12	11	12	81	142	50	20	6	**4550-MC-020**	**4550A-MC-020**
	25.60 - 32.59	15.6	11	14	102	163	50	20	6	**4550-MC-030**	**4550A-MC-030**
	32.60 - 40.59	22	14	16	102	172	56	25	6	**4550-MC-040**	**4550A-MC-040**
	40.60 - 45.59	25.4	15	16	102	173	56	25	6	**4550-MC-050**	**4550A-MC-050**
	45.60 - 49.59	30	20.5	18.5	105	185.5	60	32	6	**4550-MC-060**	**4550A-MC-060**
	49.60 - 60.59	30	20.5	18.5	105	185.5	60	32	6	**4550-MC-070**	**4550A-MC-070**
	60.60 - 70.59	40	24.5	18.5	105	189.5	60	32	6	**4550-MC-080**	**4550A-MC-080**
	70.60 - 79.59	40	24.5	18.5	105	189.5	60	32	6	**4550-MC-090**	**4550A-MC-090**
	79.60 - 90.59	56	28.5	18.5	105	203.5	70	40	8	**4550-MC-100**	**4550A-MC-100**
	90.60 - 100.59	56	28.5	18.5	105	203.5	70	40	8	**4550-MC-110**	**4550A-MC-110**

*Complete mandrel does not include cutting ring.

C: 62 - 73 C: 32 - 33 C: 54 - 61 C: 76
Key on C: 1

i = Imperial (in)
m = Metric (mm)

Ring Style Mandrels

4550 Series | Short Length | Spare Parts

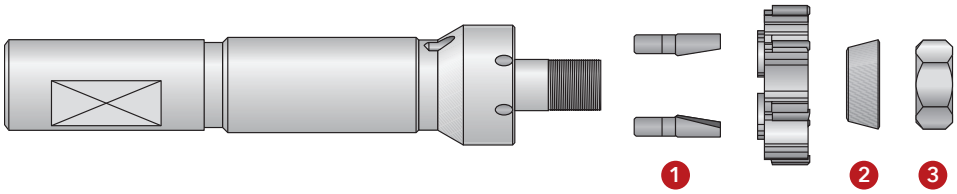

	Part No. (Complete Mandrel*)		Spare Parts 1		2	3	
	With Flat	Without Flat	Drive Pins	Number of Drive Pins	Conical Ring	Nut	Wrench Size (mm)
	94550-MC-010	94550A-MC-010	2000-CO-010	3	2010-AC-010	2000-DA-010	10
	94550-MC-020	94550A-MC-020	2000-CO-020	3	2010-AC-010	2000-DA-010	10
	94550-MC-030	94550A-MC-030	2000-CO-030	3	2010-AC-020	2000-DA-020	13
	94550-MC-040	94550A-MC-040	2000-CO-040	2	2010-AC-030	2000-DA-060	19
	94550-MC-050	94550A-MC-050	2000-CO-060	2	2010-AC-040	2000-DA-090	22
i	94550-MC-060	94550A-MC-060	2000-CO-060	2	2010-AC-050	2000-GH-880	30 ◆
	94550-MC-070	94550A-MC-070	2000-CO-070	2	2010-AC-050	2000-GH-880	30 ◆
	94550-MC-080	94550A-MC-080	2000-CO-080	2	2010-AC-060	2000-GH-900	40 ◆
	94550-MC-090	94550A-MC-090	2000-CO-090	2	2010-AC-060	2000-GH-900	40 ◆
	94550-MC-100	94550A-MC-100	2000-CO-090	2	2010-AC-070	2000-GH-920	56 ◆
	94550-MC-110	94550A-MC-110	2000-CO-090	2	2010-AC-070	2000-GH-920	56 ◆
	4550-MC-010	4550A-MC-010	2000-CO-010	3	2010-AC-010	2000-DA-010	10
	4550-MC-020	4550A-MC-020	2000-CO-020	3	2010-AC-010	2000-DA-010	10
	4550-MC-030	4550A-MC-030	2000-CO-030	3	2010-AC-020	2000-DA-020	13
	4550-MC-040	4550A-MC-040	2000-CO-040	2	2010-AC-030	2000-DA-060	19
	4550-MC-050	4550A-MC-050	2000-CO-060	2	2010-AC-040	2000-DA-090	22
m	4550-MC-060	4550A-MC-060	2000-CO-060	2	2010-AC-050	2000-GH-880	30 ◆
	4550-MC-070	4550A-MC-070	2000-CO-070	2	2010-AC-050	2000-GH-880	30 ◆
	4550-MC-080	4550A-MC-080	2000-CO-080	2	2010-AC-060	2000-GH-900	40 ◆
	4550-MC-090	4550A-MC-090	2000-CO-090	2	2010-AC-060	2000-GH-900	40 ◆
	4550-MC-100	4550A-MC-100	2000-CO-090	2	2010-AC-070	2000-GH-920	56 ◆
	4550-MC-110	4550A-MC-110	2000-CO-090	2	2010-AC-070	2000-GH-920	56 ◆

*Complete mandrel does not include cutting ring.
◆ Spanner wrench

i = Imperial (in)
m = Metric (mm)

A DRILLING
B BORING
C REAMING
D BURNISHING
E THREADING
X SPECIALS

Ring Style Mandrels

4555 Series | Short Length | Diameter Range: 0.6929” - 3.9602” (17.60mm - 100.59mm)

Series	4555
Shank Type	Cylindrical
Application	Blind Holes
Coolant	Radial

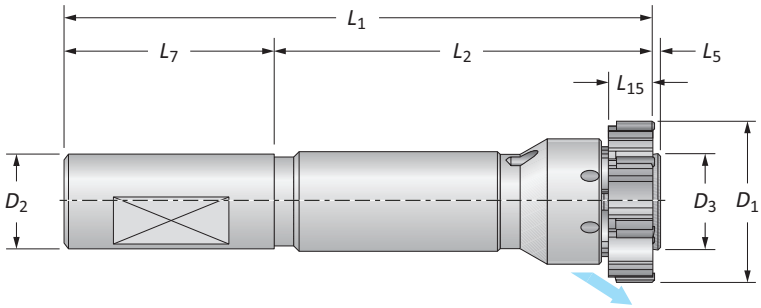

	Mandrel						Shank			Part No. (Complete Mandrel*)	
	D_1 Range	D_3	L_5	L_{15}	L_2	L_1	L_7	D_2	Teeth	With Flat	Without Flat
i	0.6929 - 0.8503	0.441	0.039	0.433	3.189	5.197	1.969	0.750	6	**94555-MC-010**	**94555A-MC-010**
	0.8504 - 1.0078	0.441	0.039	0.472	3.189	5.197	1.969	0.750	6	**94555-MC-020**	**94555A-MC-020**
	1.0079 - 1.1653	0.594	0.039	0.551	4.016	6.024	1.969	0.750	6	**94555-MC-030**	**94555A-MC-030**
	1.1654 - 1.2834	0.594	0.039	0.551	4.016	6.024	1.969	0.750	6	**94555-MC-035**	**94555A-MC-035**
	1.2835 - 1.4408	0.799	0.039	0.630	4.016	6.260	2.205	1.000	6	**94555-MC-040**	**94555A-MC-040**
	1.4409 - 1.5983	0.799	0.039	0.630	4.016	6.260	2.205	1.000	6	**94555-MC-045**	**94555A-MC-045**
	1.5984 - 1.7952	0.949	0.039	0.630	4.016	6.260	2.205	1.000	6	**94555-MC-050**	**94555A-MC-050**
	1.7953 - 1.9527	1.098	0.059	0.728	4.134	6.555	2.362	1.250	6	**94555-MC-060**	**94555A-MC-060**
	1.9528 - 2.1889	1.098	0.059	0.728	4.134	6.555	2.362	1.250	6	**94555-MC-070**	**94555A-MC-070**
	2.1890 - 2.3857	1.098	0.059	0.728	4.134	6.555	2.362	1.250	6	**94555-MC-075**	**94555A-MC-075**
	2.3858 - 2.5826	1.461	0.059	0.728	4.134	6.555	2.362	1.250	6	**94555-MC-080**	**94555A-MC-080**
	2.5827 - 2.7794	1.461	0.059	0.728	4.134	6.555	2.362	1.250	6	**94555-MC-085**	**94555A-MC-085**
	2.7795 - 3.1338	1.461	0.059	0.728	4.134	6.555	2.362	1.250	6	**94555-MC-090**	**94555A-MC-090**
	3.1339 - 3.5668	2.091	0.059	0.728	4.134	6.949	2.756	1.500	8	**94555-MC-100**	**94555A-MC-100**
	3.5669 - 3.9602	2.091	0.059	0.728	4.134	6.949	2.756	1.500	8	**94555-MC-110**	**94555A-MC-110**
m	17.60 - 21.59	11.2	1	11	81	132	50	20	6	**4555-MC-010**	**4555A-MC-010**
	21.60 - 25.59	11.2	1	12	81	132	50	20	6	**4555-MC-020**	**4555A-MC-020**
	25.60 - 29.59	15.1	1	14	102	153	50	20	6	**4555-MC-030**	**4555A-MC-030**
	29.60 - 32.59	15.1	1	14	102	153	50	20	6	**4555-MC-035**	**4555A-MC-035**
	32.60 - 36.59	20.3	1	16	102	159	56	25	6	**4555-MC-040**	**4555A-MC-040**
	36.60 - 40.59	20.3	1	16	102	159	56	25	6	**4555-MC-045**	**4555A-MC-045**
	40.60 - 45.59	24.1	1	16	102	159	56	25	6	**4555-MC-050**	**4555A-MC-050**
	45.60 - 49.59	27.9	1.5	18.5	105	166.5	60	32	6	**4555-MC-060**	**4555A-MC-060**
	49.60 - 55.59	27.9	1.5	18.5	105	166.5	60	32	6	**4555-MC-070**	**4555A-MC-070**
	55.60 - 60.59	27.9	1.5	18.5	105	166.5	60	32	6	**4555-MC-075**	**4555A-MC-075**
	60.60 - 65.59	37.1	1.5	18.5	105	166.5	60	32	6	**4555-MC-080**	**4555A-MC-080**
	65.60 - 70.59	37.1	1.5	18.5	105	166.5	60	32	6	**4555-MC-085**	**4555A-MC-085**
	70.60 - 79.59	37.1	1.5	18.5	105	166.5	60	32	6	**4555-MC-090**	**4555A-MC-090**
	79.60 - 90.59	53.1	1.5	18.5	105	176.5	70	40	8	**4555-MC-100**	**4555A-MC-100**
	90.60 - 100.59	53.1	1.5	18.5	105	176.5	70	40	8	**4555-MC-110**	**4555A-MC-110**

*Complete mandrel does not include cutting ring.

C: 62 - 73

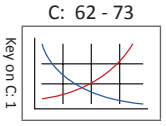

C: 32 - 33

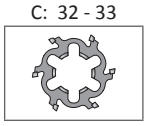

C: 54 - 61

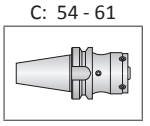

C: 76

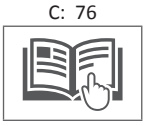

i = Imperial (in)
m = Metric (mm)

Ring Style Mandrels

4555 Series | Short Length | Spare Parts

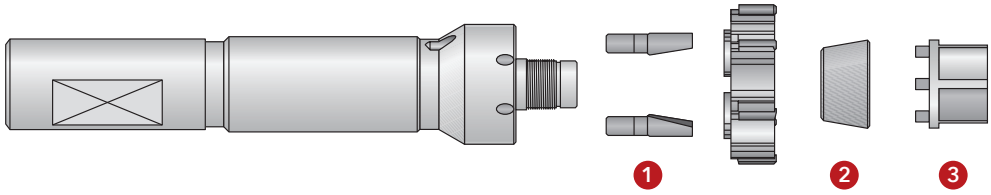

	Part No. (Complete Mandrel*)		Spare Parts 1		2			3	
	With Flat	Without Flat	Drive Pins	Number of Drive Pins	Conical Ring	Conical Ring (2nd Expansion)	Conical Ring (3rd Expansion)	Adjusting Key	Wrench Size (mm)
	94555-MC-010	**94555A-MC-010**	2000-CO-010	3	4001-AC-115	4001-AC-215	–	4001-CH-015	10
	94555-MC-020	**94555A-MC-020**	2000-CO-020	3	4001-AC-115	4001-AC-215	–	4001-CH-015	10
	94555-MC-030	**94555A-MC-030**	2000-CO-030	3	4001-AC-125	4001-AC-225	4001-AC-325	4001-CH-025	13
	94555-MC-035	**94555A-MC-035**	2000-CO-040	2	4001-AC-125	4001-AC-225	4001-AC-325	4001-CH-025	13
	94555-MC-040	**94555A-MC-040**	2000-CO-040	2	4001-AC-135	4001-AC-235	4001-AC-335	4001-CH-035	18
	94555-MC-045	**94555A-MC-045**	2000-CO-050	2	4001-AC-135	4001-AC-235	4001-AC-335	4001-CH-035	18
	94555-MC-050	**94555A-MC-050**	2000-CO-060	2	4001-AC-145	4001-AC-245	4001-AC-345	4001-CH-045	22
i	**94555-MC-060**	**94555A-MC-060**	2000-CO-060	2	4001-AC-155	4001-AC-255	4001-AC-355	4001-CH-055	26
	94555-MC-070	**94555A-MC-070**	2000-CO-070	2	4001-AC-155	4001-AC-255	4001-AC-355	4001-CH-055	26
	94555-MC-075	**94555A-MC-075**	2000-CO-080	2	4001-AC-155	4001-AC-255	4001-AC-355	4001-CH-055	26
	94555-MC-080	**94555A-MC-080**	2000-CO-080	2	4001-AC-165	4001-AC-265	4001-AC-365	4001-CH-065	34
	94555-MC-085	**94555A-MC-085**	2000-CO-090	2	4001-AC-165	4001-AC-265	4001-AC-365	4001-CH-065	34
	94555-MC-090	**94555A-MC-090**	2000-CO-090	2	4001-AC-165	4001-AC-265	4001-AC-365	4001-CH-065	34
	94555-MC-100	**94555A-MC-100**	2000-CO-090	2	4001-AC-185	4001-AC-285	4001-AC-385	4001-CH-085	46
	94555-MC-110	**94555A-MC-110**	2000-CO-090	2	4001-AC-185	4001-AC-285	4001-AC-385	4001-CH-085	46
	4555-MC-010	**4555A-MC-010**	2000-CO-010	3	4001-AC-115	4001-AC-215	–	4001-CH-015	10
	4555-MC-020	**4555A-MC-020**	2000-CO-020	3	4001-AC-115	4001-AC-215	–	4001-CH-015	10
	4555-MC-030	**4555A-MC-030**	2000-CO-030	3	4001-AC-125	4001-AC-225	4001-AC-325	4001-CH-025	13
	4555-MC-035	**4555A-MC-035**	2000-CO-040	2	4001-AC-125	4001-AC-225	4001-AC-325	4001-CH-025	13
	4555-MC-040	**4555A-MC-040**	2000-CO-040	2	4001-AC-135	4001-AC-235	4001-AC-335	4001-CH-035	18
	4555-MC-045	**4555A-MC-045**	2000-CO-050	2	4001-AC-135	4001-AC-235	4001-AC-335	4001-CH-035	18
	4555-MC-050	**4555A-MC-050**	2000-CO-060	2	4001-AC-145	4001-AC-245	4001-AC-345	4001-CH-045	22
m	**4555-MC-060**	**4555A-MC-060**	2000-CO-060	2	4001-AC-155	4001-AC-255	4001-AC-355	4001-CH-055	26
	4555-MC-070	**4555A-MC-070**	2000-CO-070	2	4001-AC-155	4001-AC-255	4001-AC-355	4001-CH-055	26
	4555-MC-075	**4555A-MC-075**	2000-CO-080	2	4001-AC-155	4001-AC-255	4001-AC-355	4001-CH-055	26
	4555-MC-080	**4555A-MC-080**	2000-CO-080	2	4001-AC-165	4001-AC-265	4001-AC-365	4001-CH-065	34
	4555-MC-085	**4555A-MC-085**	2000-CO-090	2	4001-AC-165	4001-AC-265	4001-AC-365	4001-CH-065	34
	4555-MC-090	**4555A-MC-090**	2000-CO-090	2	4001-AC-165	4001-AC-265	4001-AC-365	4001-CH-065	34
	4555-MC-100	**4555A-MC-100**	2000-CO-090	2	4001-AC-185	4001-AC-285	4001-AC-385	4001-CH-085	46
	4555-MC-110	**4555A-MC-110**	2000-CO-090	2	4001-AC-185	4001-AC-285	4001-AC-385	4001-CH-085	46

*Complete mandrel does not include cutting ring.

i = Imperial (in)
m = Metric (mm)

A DRILLING
B BORING
C REAMING
D BURNISHING
E THREADING
X SPECIALS

Ring Style Mandrels

4500 Series | Long Length | Diameter Range: 0.6929” - 3.9602” (17.60mm - 100.59mm)

Series	4500
Shank Type	Cylindrical
Application	Through Holes
Coolant	Radial

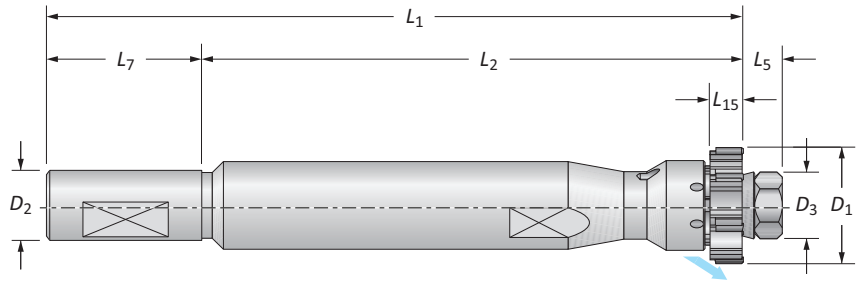

	Mandrel						Shank		Teeth	Part No. (Complete Mandrel*)	
	D_1 Range	D_3	L_5	L_{15}	L_2	L_1	L_7	D_2		With Flat	Without Flat
i	0.6929 - 0.8503	0.472	0.433	0.433	4.764	7.165	1.969	0.750	6	**94500-MC-010**	**94500A-MC-010**
	0.8504 - 1.0078	0.472	0.433	0.472	4.764	7.165	1.969	0.750	6	**94500-MC-020**	**94500A-MC-020**
	1.0079 - 1.2834	0.614	0.433	0.551	6.024	8.425	1.969	0.750	6	**94500-MC-030**	**94500A-MC-030**
	1.2835 - 1.5983	0.866	0.551	0.630	7.047	9.803	2.205	1.000	6	**94500-MC-040**	**94500A-MC-040**
	1.5984 - 1.7952	0.866	0.551	0.630	7.047	9.803	2.205	1.000	6	**94500-MC-050**	**94500A-MC-050**
	1.7953 - 1.9527	1.000	0.591	0.630	7.913	10.709	2.205	1.000	6	**94500-MC-060**	**94500A-MC-060**
	1.9528 - 2.3857	1.181	0.807	0.728	8.425	11.594	2.362	1.250	6	**94500-MC-070**	**94500A-MC-070**
	2.3858 - 2.7794	1.575	0.965	0.728	9.331	12.657	2.362	1.250	6	**94500-MC-080**	**94500A-MC-080**
	2.7795 - 3.1338	1.575	0.965	0.728	9.331	12.657	2.362	1.250	6	**94500-MC-090**	**94500A-MC-090**
	3.1339 - 3.5668	2.205	1.122	0.728	9.646	13.524	2.756	1.500	6	**94500-MC-100**	**94500A-MC-100**
	3.5669 - 3.9602	2.205	1.122	0.728	9.646	13.524	2.756	1.500	8	**94500-MC-110**	**94500A-MC-110**
m	17.60 - 21.59	12	11	11	121	182	50	20	6	**4500-MC-010**	**4500A-MC-010**
	21.60 - 25.59	12	11	12	121	182	50	20	6	**4500-MC-020**	**4500A-MC-020**
	25.60 - 32.59	15.6	11	14	153	214	50	20	6	**4500-MC-030**	**4500A-MC-030**
	32.60 - 40.59	22	14	16	179	249	56	25	6	**4500-MC-040**	**4500A-MC-040**
	40.60 - 45.59	25.4	15	16	201	272	56	25	6	**4500-MC-050**	**4500A-MC-050**
	45.60 - 49.59	30	20.5	18.5	214	294.5	60	32	6	**4500-MC-060**	**4500A-MC-060**
	49.60 - 60.59	30	20.5	18.5	214	294.5	60	32	6	**4500-MC-070**	**4500A-MC-070**
	60.60 - 70.59	40	24.5	18.5	237	321.5	60	32	6	**4500-MC-080**	**4500A-MC-080**
	70.60 - 79.59	40	24.5	18.5	237	321.5	60	32	6	**4500-MC-090**	**4500A-MC-090**
	79.60 - 90.59	56	28.5	18.5	245	343.5	70	40	6	**4500-MC-100**	**4500A-MC-100**
	90.60 - 100.59	56	28.5	18.5	245	343.5	70	40	8	**4500-MC-110**	**4500A-MC-110**

*Complete mandrel does not include cutting ring.

C: 62 - 73

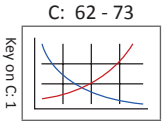

C: 32 - 33

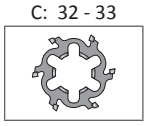

C: 54 - 61

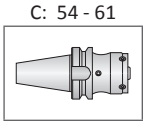

C: 76

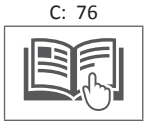

i = Imperial (in)
m = Metric (mm)

Ring Style Mandrels

4500 Series | Long Length | Spare Parts

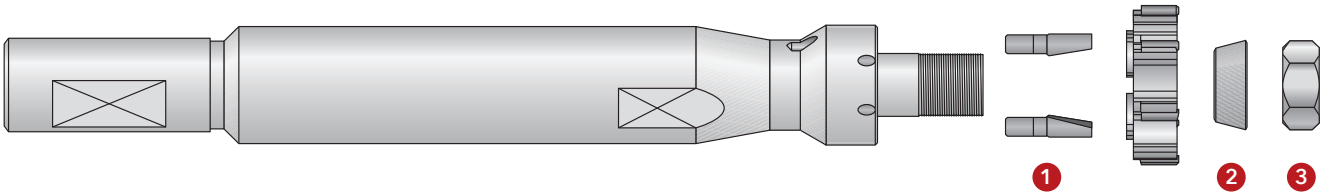

	Part No. (Complete Mandrel*)		Spare Parts 1		2	3	
	With Flat	Without Flat	Drive Pins	Number of Drive Pins	Conical Ring	Nut	Wrench Size (mm)
	94500-MC-010	**94500A-MC-010**	2000-CO-010	3	2010-AC-010	2000-DA-010	10
	94500-MC-020	**94500A-MC-020**	2000-CO-020	3	2010-AC-010	2000-DA-010	10
	94500-MC-030	**94500A-MC-030**	2000-CO-030	3	2010-AC-020	2000-DA-020	13
	94500-MC-040	**94500A-MC-040**	2000-CO-040	2	2010-AC-030	2000-DA-060	19
	94500-MC-050	**94500A-MC-050**	2000-CO-060	2	2010-AC-040	2000-DA-090	22
i	**94500-MC-060**	**94500A-MC-060**	2000-CO-060	2	2010-AC-050	2000-GH-880	30 ◆
	94500-MC-070	**94500A-MC-070**	2000-CO-070	2	2010-AC-050	2000-GH-880	30 ◆
	94500-MC-080	**94500A-MC-080**	2000-CO-080	2	2010-AC-060	2000-GH-900	40 ◆
	94500-MC-090	**94500A-MC-090**	2000-CO-090	2	2010-AC-060	2000-GH-900	40 ◆
	94500-MC-100	**94500A-MC-100**	2000-CO-090	2	2010-AC-070	2000-GH-920	56 ◆
	94500-MC-110	**94500A-MC-110**	2000-CO-090	2	2010-AC-070	2000-GH-920	56 ◆
	4500-MC-010	**4500A-MC-010**	2000-CO-010	3	2010-AC-010	2000-DA-010	10
	4500-MC-020	**4500A-MC-020**	2000-CO-020	3	2010-AC-010	2000-DA-010	10
	4500-MC-030	**4500A-MC-030**	2000-CO-030	3	2010-AC-020	2000-DA-020	13
	4500-MC-040	**4500A-MC-040**	2000-CO-040	2	2010-AC-030	2000-DA-060	19
	4500-MC-050	**4500A-MC-050**	2000-CO-060	2	2010-AC-040	2000-DA-090	22
m	**4500-MC-060**	**4500A-MC-060**	2000-CO-060	2	2010-AC-050	2000-GH-880	30 ◆
	4500-MC-070	**4500A-MC-070**	2000-CO-070	2	2010-AC-050	2000-GH-880	30 ◆
	4500-MC-080	**4500A-MC-080**	2000-CO-080	2	2010-AC-060	2000-GH-900	40 ◆
	4500-MC-090	**4500A-MC-090**	2000-CO-090	2	2010-AC-060	2000-GH-900	40 ◆
	4500-MC-100	**4500A-MC-100**	2000-CO-090	2	2010-AC-070	2000-GH-920	56 ◆
	4500-MC-110	**4500A-MC-110**	2000-CO-090	2	2010-AC-070	2000-GH-920	56 ◆

*Complete mandrel does not include cutting ring.
◆ Spanner wrench

i = Imperial (in)
m = Metric (mm)

A DRILLING
B BORING
C REAMING
D BURNISHING
E THREADING
X SPECIALS

Ring Style Mandrels

4505 Series | Long Length | Diameter Range: 0.6929” - 3.9602” (17.60mm - 100.59mm)

Series	4505
Shank Type	Cylindrical
Application	Blind Holes
Coolant	Radial

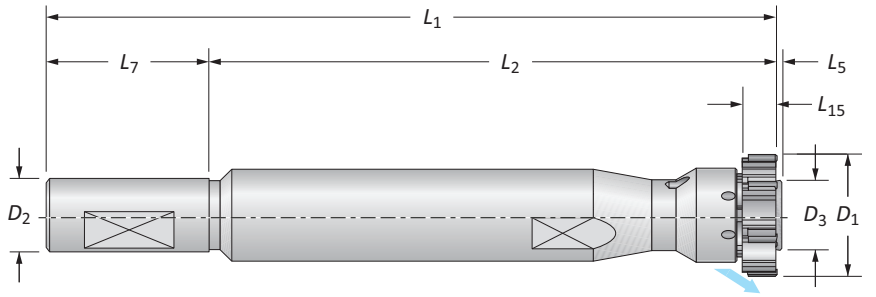

	Mandrel					Shank			Part No. (Complete Mandrel*)	
D_1 Range	D_3	L_5	L_{15}	L_2	L_1	L_7	D_2	Teeth	With Flat	Without Flat
0.6929 - 0.8503	0.441	0.039	0.433	4.764	6.772	1.969	0.750	6	**94505-MC-010**	**94505A-MC-010**
0.8504 - 1.0078	0.441	0.039	0.472	4.764	6.772	1.969	0.750	6	**94505-MC-020**	**94505A-MC-020**
1.0079 - 1.1653	0.594	0.039	0.551	6.024	8.031	1.969	0.750	6	**94505-MC-030**	**94505A-MC-030**
1.1654 - 1.2834	0.594	0.039	0.551	6.024	8.031	1.969	0.750	6	**94505-MC-035**	**94505A-MC-035**
1.2835 - 1.4408	0.799	0.039	0.630	7.047	9.291	2.205	1.000	6	**94505-MC-040**	**94505A-MC-040**
1.4409 - 1.5983	0.799	0.039	0.630	7.047	9.291	2.205	1.000	6	**94505-MC-045**	**94505A-MC-045**
1.5984 - 1.7952	0.949	0.039	0.630	7.913	10.157	2.205	1.000	6	**94505-MC-050**	**94505A-MC-050**
1.7953 - 1.9527	1.098	0.059	0.728	8.425	10.846	2.362	1.250	6	**94505-MC-060**	**94505A-MC-060**
1.9528 - 2.1889	1.098	0.059	0.728	8.425	10.846	2.362	1.250	6	**94505-MC-070**	**94505A-MC-070**
2.1890 - 2.3857	1.098	0.059	0.728	8.425	10.846	2.362	1.250	6	**94505-MC-075**	**94505A-MC-075**
2.3858 - 2.5826	1.461	0.059	0.728	9.331	11.752	2.362	1.250	6	**94505-MC-080**	**94505A-MC-080**
2.5827 - 2.7794	1.461	0.059	0.728	9.331	11.752	2.362	1.250	6	**94505-MC-085**	**94505A-MC-085**
2.7795 - 3.1338	1.461	0.059	0.728	9.331	11.752	2.362	1.250	6	**94505-MC-090**	**94505A-MC-090**
3.1339 - 3.5668	2.091	0.059	0.728	9.646	12.461	2.756	1.500	8	**94505-MC-100**	**94505A-MC-100**
3.5669 - 3.9602	2.091	0.059	0.728	9.646	12.461	2.756	1.500	8	**94505-MC-110**	**94505A-MC-110**
17.60 - 21.59	11.2	1	11	121	172	50	20	6	**4505-MC-010**	**4505A-MC-010**
21.60 - 25.59	11.2	1	12	121	172	50	20	6	**4505-MC-020**	**4505A-MC-020**
25.60 - 29.59	15.1	1	14	153	204	50	20	6	**4505-MC-030**	**4505A-MC-030**
29.60 - 32.59	15.1	1	14	153	204	50	20	6	**4505-MC-035**	**4505A-MC-035**
32.60 - 36.59	20.3	1	16	179	236	56	25	6	**4505-MC-040**	**4505A-MC-040**
36.60 - 40.59	20.3	1	16	179	236	56	25	6	**4505-MC-045**	**4505A-MC-045**
40.60 - 45.59	24.1	1	16	201	258	56	25	6	**4505-MC-050**	**4505A-MC-050**
45.60 - 49.59	27.9	1.5	18.5	214	275.5	60	32	6	**4505-MC-060**	**4505A-MC-060**
49.60 - 55.59	27.9	1.5	18.5	214	275.5	60	32	6	**4505-MC-070**	**4505A-MC-070**
55.60 - 60.59	27.9	1.5	18.5	214	275.5	60	32	6	**4505-MC-075**	**4505A-MC-075**
60.60 - 65.59	37.1	1.5	18.5	237	298.5	60	32	6	**4505-MC-080**	**4505A-MC-080**
65.60 - 70.59	37.1	1.5	18.5	237	298.5	60	32	6	**4505-MC-085**	**4505A-MC-085**
70.60 - 79.59	37.1	1.5	18.5	237	298.5	60	32	6	**4505-MC-090**	**4505A-MC-090**
79.60 - 90.59	53.1	1.5	18.5	245	316.5	70	40	8	**4505-MC-100**	**4505A-MC-100**
90.60 - 100.59	53.1	1.5	18.5	245	316.5	70	40	8	**4505-MC-110**	**4505A-MC-110**

*Complete mandrel does not include cutting ring.

C: 62 - 73
Key on C: 1
C: 32 - 33
C: 54 - 61
C: 76

i = Imperial (in)
m = Metric (mm)

Ring Style Mandrels

4505 Series | Long Length | Spare Parts

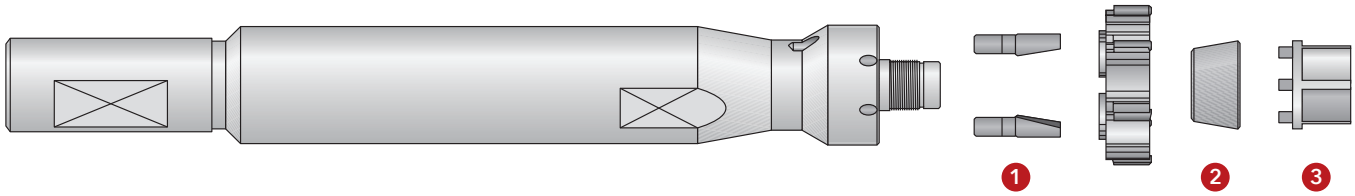

Part No. (Complete Mandrel*)		Spare Parts 1		2			3	
With Flat	Without Flat	Drive Pins	Number of Drive Pins	Conical Ring	Conical Ring (2nd Expansion)	Conical Ring (3rd Expansion)	Adjusting Key	Wrench Size (mm)
94505-MC-010	94505A-MC-010	2000-CO-010	3	4001-AC-115	4001-AC-215	–	4001-CH-015	10
94505-MC-020	94505A-MC-020	2000-CO-020	3	4001-AC-115	4001-AC-215	–	4001-CH-015	10
94505-MC-030	94505A-MC-030	2000-CO-030	3	4001-AC-125	4001-AC-225	4001-AC-325	4001-CH-025	13
94505-MC-035	94505A-MC-035	2000-CO-040	2	4001-AC-125	4001-AC-225	4001-AC-325	4001-CH-025	13
94505-MC-040	94505A-MC-040	2000-CO-040	2	4001-AC-135	4001-AC-235	4001-AC-335	4001-CH-035	18
94505-MC-045	94505A-MC-045	2000-CO-050	2	4001-AC-135	4001-AC-235	4001-AC-335	4001-CH-035	18
94505-MC-050	94505A-MC-050	2000-CO-060	2	4001-AC-145	4001-AC-245	4001-AC-345	4001-CH-045	22
94505-MC-060	94505A-MC-060	2000-CO-060	2	4001-AC-155	4001-AC-255	4001-AC-355	4001-CH-055	26
94505-MC-070	94505A-MC-070	2000-CO-070	2	4001-AC-155	4001-AC-255	4001-AC-355	4001-CH-055	26
94505-MC-075	94505A-MC-075	2000-CO-080	2	4001-AC-155	4001-AC-255	4001-AC-355	4001-CH-055	26
94505-MC-080	94505A-MC-080	2000-CO-080	2	4001-AC-165	4001-AC-265	4001-AC-365	4001-CH-065	34
94505-MC-085	94505A-MC-085	2000-CO-090	2	4001-AC-165	4001-AC-265	4001-AC-365	4001-CH-065	34
94505-MC-090	94505A-MC-090	2000-CO-090	2	4001-AC-165	4001-AC-265	4001-AC-365	4001-CH-065	34
94505-MC-100	94505A-MC-100	2000-CO-090	2	4001-AC-185	4001-AC-285	4001-AC-385	4001-CH-085	46
94505-MC-110	94505A-MC-110	2000-CO-090	2	4001-AC-185	4001-AC-285	4001-AC-385	4001-CH-085	46
4505-MC-010	4505A-MC-010	2000-CO-010	3	4001-AC-115	4001-AC-215	–	4001-CH-015	10
4505-MC-020	4505A-MC-020	2000-CO-020	3	4001-AC-115	4001-AC-215	–	4001-CH-015	10
4505-MC-030	4505A-MC-030	2000-CO-030	3	4001-AC-125	4001-AC-225	4001-AC-325	4001-CH-025	13
4505-MC-035	4505A-MC-035	2000-CO-040	2	4001-AC-125	4001-AC-225	4001-AC-325	4001-CH-025	13
4505-MC-040	4505A-MC-040	2000-CO-040	2	4001-AC-135	4001-AC-235	4001-AC-335	4001-CH-035	18
4505-MC-045	4505A-MC-045	2000-CO-050	2	4001-AC-135	4001-AC-235	4001-AC-335	4001-CH-035	18
4505-MC-050	4505A-MC-050	2000-CO-060	2	4001-AC-145	4001-AC-245	4001-AC-345	4001-CH-045	22
4505-MC-060	4505A-MC-060	2000-CO-060	2	4001-AC-155	4001-AC-255	4001-AC-355	4001-CH-055	26
4505-MC-070	4505A-MC-070	2000-CO-070	2	4001-AC-155	4001-AC-255	4001-AC-355	4001-CH-055	26
4505-MC-075	4505A-MC-075	2000-CO-080	2	4001-AC-155	4001-AC-255	4001-AC-355	4001-CH-055	26
4505-MC-080	4505A-MC-080	2000-CO-080	2	4001-AC-165	4001-AC-265	4001-AC-365	4001-CH-065	34
4505-MC-085	4505A-MC-085	2000-CO-090	2	4001-AC-165	4001-AC-265	4001-AC-365	4001-CH-065	34
4505-MC-090	4505A-MC-090	2000-CO-090	2	4001-AC-165	4001-AC-265	4001-AC-365	4001-CH-065	34
4505-MC-100	4505A-MC-100	2000-CO-090	2	4001-AC-185	4001-AC-285	4001-AC-385	4001-CH-085	46
4505-MC-110	4505A-MC-110	2000-CO-090	2	4001-AC-185	4001-AC-285	4001-AC-385	4001-CH-085	46

*Complete mandrel does not include cutting ring.

ⓘ = Imperial (in)
ⓜ = Metric (mm)

A DRILLING
B BORING
C REAMING
D BURNISHING
E THREADING
X SPECIALS

Ring Style Mandrels

4330 Series | Short Length | Diameter Range: 0.6929” - 3.9602 (17.60mm - 100.59mm)

Series	4330
Shank Type	Modular
Application	Through Holes
Coolant	Radial

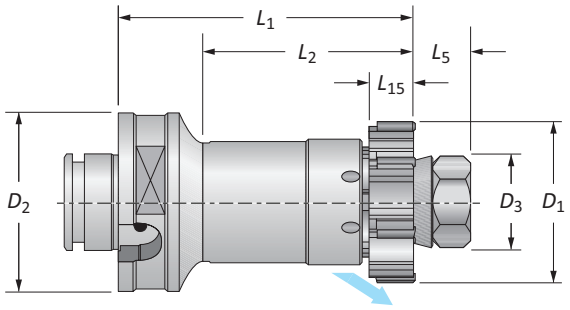

	D_1 Range		Mandrel					Shank		
	Imperial (inch)	Metric (mm)	D_3	L_5	L_{15}	L_2	L_1	D_2	Teeth	Part No. (Complete Mandrel*)
	0.6929 - 0.8503	17.60 - 21.59	12	11	11	55	75	50	6	**4330-MC-010**
	0.8504 - 1.0078	21.60 - 25.59	12	11	12	55	75	50	6	**4330-MC-020**
	1.0079 - 1.2834	25.60 - 32.59	15.6	11	14	60	80	50	6	**4330-MC-030**
	1.2835 - 1.5983	32.60 - 40.59	22	14	16	60	80	50	6	**4330-MC-040**
	1.5984 - 1.7952	40.60 - 45.59	25.4	15	16	60	80	50	6	**4330-MC-050**
m	1.7953 - 1.9527	45.60 - 49.59	30	20.5	18.5	60	80	50	6	**4330-MC-060**
	1.9528 - 2.3857	49.60 - 60.59	30	20.5	18.5	60	80	50	6	**4330-MC-070**
	2.3858 - 2.7794	60.60 - 70.59	40	24.5	18.5	65	90	63	6	**4330-MC-080**
	2.7795 - 3.1338	70.60 - 79.59	40	24.5	18.5	65	90	63	6	**4330-MC-090**
	3.1339 - 3.5668	79.60 - 90.59	56	28.5	18.5	65	90	63	8	**4330-MC-100**
	3.5669 - 3.9602	90.60 - 100.59	56	28.5	18.5	65	90	63	8	**4330-MC-110**

*Complete mandrel does not include cutting ring.

C: 62 - 73
Key on C: 1
C: 32 - 33
C: 54 - 61
C: 76

i = Imperial (in)
m = Metric (mm)

Ring Style Mandrels

4330 Series | Short Length | Spare Parts

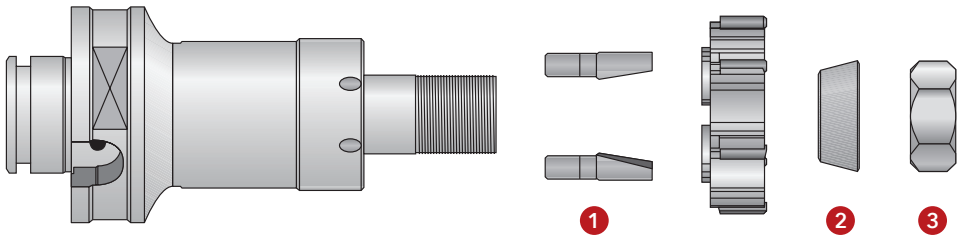

	Part No. (Complete Mandrel*)	Spare Parts 1 Drive Pins	Number of Drive Pins	2 Conical Ring	3 Nut	Wrench Size (mm)
	4330-MC-010	2000-CO-010	3	2010-AC-010	2000-DA-010	10
	4330-MC-020	2000-CO-020	3	2010-AC-010	2000-DA-010	10
	4330-MC-030	2000-CO-030	3	2010-AC-020	2000-DA-020	13
	4330-MC-040	2000-CO-040	2	2010-AC-030	2000-DA-060	19
	4330-MC-050	2000-CO-060	2	2010-AC-040	2000-DA-090	22
ⓜ	**4330-MC-060**	2000-CO-060	2	2010-AC-050	2000-GH-880	30 ◆
	4330-MC-070	2000-CO-070	2	2010-AC-050	2000-GH-880	30 ◆
	4330-MC-080	2000-CO-080	2	2010-AC-060	2000-GH-900	40 ◆
	4330-MC-090	2000-CO-090	2	2010-AC-060	2000-GH-900	40 ◆
	4330-MC-100	2000-CO-090	2	2010-AC-070	2000-GH-920	56 ◆
	4330-MC-110	2000-CO-090	2	2010-AC-070	2000-GH-920	56 ◆

*Complete mandrel does not include cutting ring.
◆ Spanner wrench

ⓘ = Imperial (in)
ⓜ = Metric (mm)

A DRILLING
B BORING
C REAMING
D BURNISHING
E THREADING
X SPECIALS

Ring Style Mandrels

4335 Series | Short Length | Diameter Range: 0.6929” - 3.9602 (17.60mm - 100.59mm)

Series	4335
Shank Type	Modular
Application	Blind Holes
Coolant	Radial

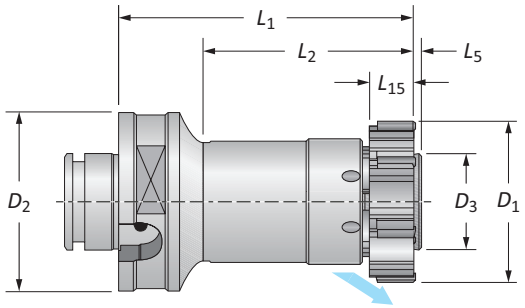

	D_1 Range		Mandrel					Shank		
	Imperial (inch)	Metric (mm)	D_3	L_5	L_{15}	L_2	L_1	D_2	Teeth	Part No. (Complete Mandrel*)
	0.6929 - 0.8503	17.60 - 21.59	11.2	1	11	55	75	50	6	**4335-MC-010**
	0.8504 - 1.0078	21.60 - 25.59	11.2	1	12	55	75	50	6	**4335-MC-020**
	1.0079 - 1.1653	25.60 - 29.59	15.1	1	14	60	80	50	6	**4335-MC-030**
	1.1654 - 1.2834	29.60 - 32.59	15.1	1	14	60	80	50	6	**4335-MC-035**
	1.2835 - 1.4408	32.60 - 36.59	20.3	1	16	60	80	50	6	**4335-MC-040**
	1.4409 - 1.5983	36.60 - 40.59	20.3	1	16	60	80	50	6	**4335-MC-045**
	1.5984 - 1.7952	40.60 - 45.59	24.1	1	16	60	80	50	6	**4335-MC-050**
m	1.7953 - 1.9527	45.60 - 49.59	27.9	1.5	18.5	60	80	50	6	**4335-MC-060**
	1.9528 - 2.1889	49.60 - 55.59	27.9	1.5	18.5	60	80	50	6	**4335-MC-070**
	2.1890 - 2.3857	55.60 - 60.59	27.9	1.5	18.5	60	80	50	6	**4335-MC-075**
	2.3858 - 2.5826	60.60 - 65.59	37.1	1.5	18.5	65	90	63	6	**4335-MC-080**
	2.5827 - 2.7794	65.60 - 70.59	37.1	1.5	18.5	65	90	63	6	**4335-MC-085**
	2.7795 - 3.1338	70.60 - 79.59	37.1	1.5	18.5	65	90	63	6	**4335-MC-090**
	3.1339 - 3.5668	79.60 - 90.59	53.1	1.5	18.5	65	90	63	8	**4335-MC-100**
	3.5669 - 3.9602	90.60 - 100.59	53.1	1.5	18.5	65	90	63	8	**4335-MC-110**

*Complete mandrel does not include cutting ring.

C: 62 - 73
Key on C: 1
C: 32 - 33
C: 54 - 61
C: 76

i = Imperial (in)
m = Metric (mm)

Ring Style Mandrels

4335 Series | Short Length | Spare Parts

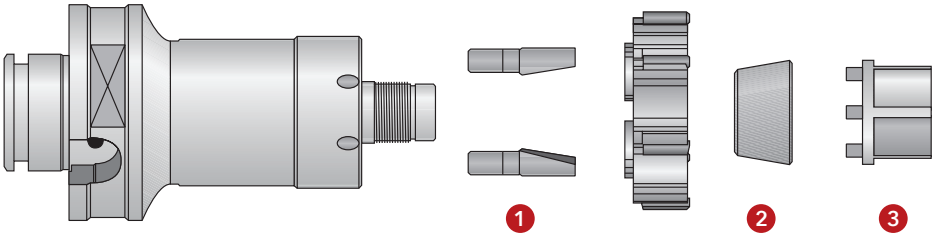

	Part No. (Complete Mandrel*)	Spare Parts 1: Drive Pins	1: Number of Drive Pins	2: Conical Ring	2: Conical Ring (2nd Expansion)	2: Conical Ring (3rd Expansion)	3: Adjusting Key	3: Wrench Size (mm)
	4335-MC-010	2000-CO-010	3	4001-AC-115	4001-AC-215	–	4001-CH-015	10
	4335-MC-020	2000-CO-020	3	4001-AC-115	4001-AC-215	–	4001-CH-015	10
	4335-MC-030	2000-CO-030	3	4001-AC-125	4001-AC-225	4001-AC-325	4001-CH-025	13
	4335-MC-035	2000-CO-040	2	4001-AC-125	4001-AC-225	4001-AC-325	4001-CH-025	13
	4335-MC-040	2000-CO-040	2	4001-AC-135	4001-AC-235	4001-AC-335	4001-CH-035	18
	4335-MC-045	2000-CO-050	2	4001-AC-135	4001-AC-235	4001-AC-335	4001-CH-035	18
	4335-MC-050	2000-CO-060	2	4001-AC-145	4001-AC-245	4001-AC-345	4001-CH-045	22
m	**4335-MC-060**	2000-CO-060	2	4001-AC-155	4001-AC-255	4001-AC-355	4001-CH-055	26
	4335-MC-070	2000-CO-070	2	4001-AC-155	4001-AC-255	4001-AC-355	4001-CH-055	26
	4335-MC-075	2000-CO-080	2	4001-AC-155	4001-AC-255	4001-AC-355	4001-CH-055	26
	4335-MC-080	2000-CO-080	2	4001-AC-165	4001-AC-265	4001-AC-365	4001-CH-065	34
	4335-MC-085	2000-CO-090	2	4001-AC-165	4001-AC-265	4001-AC-365	4001-CH-065	34
	4335-MC-090	2000-CO-090	2	4001-AC-165	4001-AC-265	4001-AC-365	4001-CH-065	34
	4335-MC-100	2000-CO-090	2	4001-AC-185	4001-AC-285	4001-AC-385	4001-CH-085	46
	4335-MC-110	2000-CO-090	2	4001-AC-185	4001-AC-285	4001-AC-385	4001-CH-085	46

*Complete mandrel does not include cutting ring.

i = Imperial (in)
m = Metric (mm)

A DRILLING
B BORING
C REAMING
D BURNISHING
E THREADING
X SPECIALS

Ring Style Mandrels

4350 Series | Standard Length | Diameter Range: 0.6929” - 7.8972 (17.60mm - 200.59mm)

Series	4350
Shank Type	Modular
Application	Through Holes
Coolant	Radial

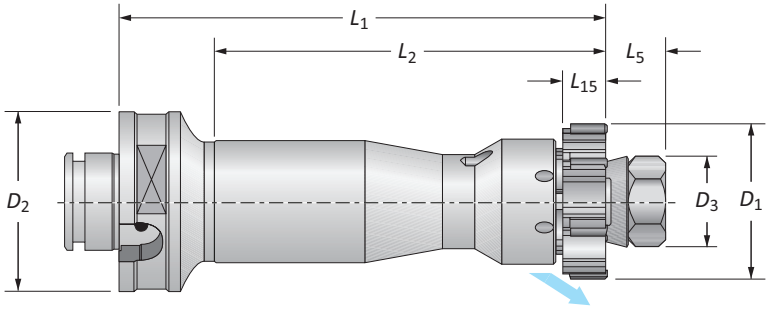

	D_1 Range		Mandrel					Shank		
	Imperial (inch)	Metric (mm)	D_3	L_5	L_{15}	L_2	L_1	D_2	Teeth	Part No. (Complete Mandrel*)
	0.6929 - 0.8503	17.60 - 21.59	12	11	11	81	116	50	6	**4350-MC-010**
	0.8504 - 1.0078	21.60 - 25.59	12	11	12	81	116	50	6	**4350-MC-020**
	1.0079 - 1.2834	25.60 - 32.59	15.6	11	14	102	137	50	6	**4350-MC-030**
	1.2835 - 1.5983	32.60 - 40.59	22	14	16	102	137	50	6	**4350-MC-040**
	1.5984 - 1.7952	40.60 - 45.59	25.4	15	16	102	137	50	6	**4350-MC-050**
m	1.7953 - 1.9527	45.60 - 49.59	30	20.5	18.5	105	140	50	6	**4350-MC-060**
	1.9528 - 2.3857	49.60 - 60.59	30	20.5	18.5	105	140	50	6	**4350-MC-070**
	2.3858 - 2.7794	60.60 - 70.59	40	24.5	18.5	105	140	63	6	**4350-MC-080**
	2.7795 - 3.1338	70.60 - 79.59	40	24.5	18.5	105	140	63	6	**4350-MC-090**
	3.1339 - 3.5668	79.60 - 90.59	56	28.5	18.5	105	140	63	8	**4350-MC-100**
	3.5669 - 3.9602	90.60 - 100.59	56	28.5	18.5	105	140	63	8	**4350-MC-110**

*Complete mandrel does not include cutting ring.

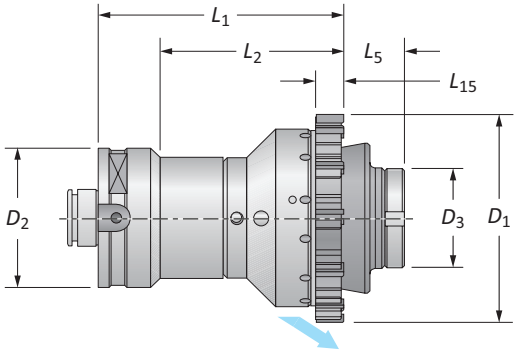

	D_1 Range		Mandrel					Shank		
	Imperial (inch)	Metric (mm)	D_3	L_5	L_{15}	L_2	L_1	D_2	Teeth	Part No. (Complete Mandrel*)
	3.9603 - 4.3539	100.60 - 110.59	73.8	35.5	18.5	–	140	80	10	**4350-MC-120**
	4.3540 - 4.5508	110.60 - 115.59	80.8	35.5	18.5	–	140	80	12	**4350-MC-130**
	4.5509 - 4.7476	115.60 - 120.59	86.8	35.5	18.5	–	140	80	12	**4350-MC-140**
	4.7477 - 4.9445	120.60 - 125.59	86.8	35.5	18.5	–	140	80	12	**4350-MC-150**
	4.9446 - 5.2201	125.60 - 132.59	90.8	35.5	18.5	–	140	80	12	**4350-MC-160**
	5.2202 - 5.4957	132.60 - 139.59	90.8	35.5	18.5	–	140	80	12	**4350-MC-170**
m	5.4958 - 5.7319	139.60 - 145.59	102.8	35.5	18.5	–	140	80	12	**4350-MC-180**
	5.7320 - 6.1256	145.60 - 155.59	107.8	35.5	18.5	–	140	80	12	**4350-MC-190**
	6.1257 - 6.5193	155.60 - 165.59	107.8	48.5	18.5	–	140	80	12	**4350-MC-200**
	6.5194 - 6.9130	165.60 - 175.59	117.8	48.5	18.5	–	140	80	12	**4350-MC-210**
	6.9131 - 7.3067	175.60 - 185.59	127.8	48.5	18.5	–	140	80	12	**4350-MC-220**
	7.3068 - 7.7004	185.60 - 195.59	137.8	48.5	18.5	–	140	80	12	**4350-MC-230**
	7.7005 - 7.8972	195.60 - 200.59	145.8	48.5	18.5	–	140	80	12	**4350-MC-240**

*Complete mandrel does not include cutting ring.

C: 62 - 73
Key on C: 1
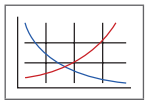
C: 32 - 33

C: 54 - 61
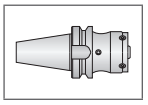
C: 76

i = Imperial (in)
m = Metric (mm)

Ring Style Mandrels

4350 Series | Standard Length | Spare Parts

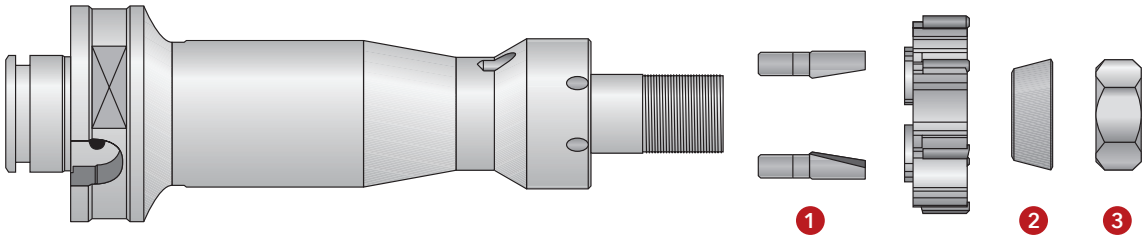

	Part No. (Complete Mandrel*)	Spare Parts 1 Drive Pins	1 Number of Drive Pins	2 Conical Ring	3 Nut	3 Wrench Size (mm)
	4350-MC-010	2000-CO-010	3	2010-AC-010	2000-DA-010	10
	4350-MC-020	2000-CO-020	3	2010-AC-010	2000-DA-010	10
	4350-MC-030	2000-CO-030	3	2010-AC-020	2000-DA-020	13
	4350-MC-040	2000-CO-040	2	2010-AC-030	2000-DA-060	19
	4350-MC-050	2000-CO-060	2	2010-AC-040	2000-DA-090	22
ⓜ	**4350-MC-060**	2000-CO-060	2	2010-AC-050	2000-GH-880	30 ◆
	4350-MC-070	2000-CO-070	2	2010-AC-050	2000-GH-880	30 ◆
	4350-MC-080	2000-CO-080	2	2010-AC-060	2000-GH-900	40 ◆
	4350-MC-090	2000-CO-090	2	2010-AC-060	2000-GH-900	40 ◆
	4350-MC-100	2000-CO-090	2	2010-AC-070	2000-GH-920	56 ◆
	4350-MC-110	2000-CO-090	2	2010-AC-070	2000-GH-920	56 ◆

*Complete mandrel does not include cutting ring.
◆ Spanner wrench

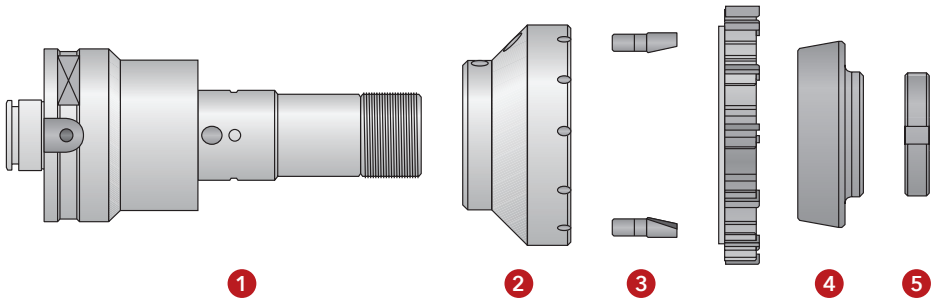

	Part No. (Complete Mandrel*)	Spare Parts 1 Mandrel	2 Flange	3 Drive Pins	3 Number of Drive Pins	4 Conical Ring	5 Nut	5 Wrench Size (mm)
	4350-MC-120	4350-MA-120	4355-FL-035	2000-CO-090	2	2060-BU-010	2000-GH-095	58 ◆
	4350-MC-130	4350-MA-120	4355-FL-045	2000-CO-090	2	2060-BU-020	2000-GH-095	58 ◆
	4350-MC-140	4350-MA-120	4355-FL-055	2000-CO-090	2	2060-BU-030	2000-GH-095	58 ◆
	4350-MC-150	4350-MA-120	4355-FL-065	2000-CO-090	2	2060-BU-030	2000-GH-095	58 ◆
	4350-MC-160	4350-MA-120	4355-FL-075	2000-CO-100	2	2060-BU-040	2000-GH-095	58 ◆
	4350-MC-170	4350-MA-120	4355-FL-085	2000-CO-100	2	2060-BU-040	2000-GH-095	58 ◆
ⓜ	**4350-MC-180**	4350-MA-120	4355-FL-095	2000-CO-100	2	2060-BU-050	2000-GH-095	58 ◆
	4350-MC-190	4350-MA-120	4355-FL-105	2000-CO-110	2	2060-BU-060	2000-GH-095	58 ◆
	4350-MC-200	4350-MA-200	4355-FL-115	2000-CO-110	2	2060-BU-070	2000-GH-120	90 ◆
	4350-MC-210	4350-MA-200	4355-FL-125	2000-CO-110	2	2060-BU-080	2000-GH-120	90 ◆
	4350-MC-220	4350-MA-200	4355-FL-135	2000-CO-120	2	2060-BU-090	2000-GH-120	90 ◆
	4350-MC-230	4350-MA-200	4355-FL-145	2000-CO-120	2	2060-BU-100	2000-GH-120	90 ◆
	4350-MC-240	4350-MA-200	4355-FL-155	2000-CO-120	2	2060-BU-110	2000-GH-120	90 ◆

*Complete mandrel does not include cutting ring.
◆ Spanner wrench

ⓘ = Imperial (in)
ⓜ = Metric (mm)

A DRILLING
B BORING
C REAMING
D BURNISHING
E THREADING
X SPECIALS

Ring Style Mandrels

4355 Series | Standard Length | Diameter Range: 0.6929” - 7.8972 (17.60mm - 200.59mm)

Series	4355
Shank Type	Modular
Application	Blind Holes
Coolant	Radial

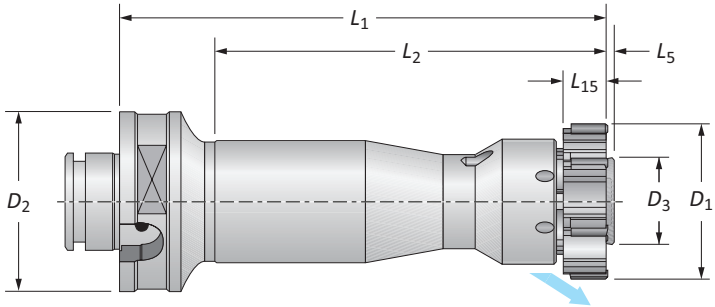

	D_1 Range		Mandrel					Shank		
	Imperial (inch)	Metric (mm)	D_3	L_5	L_{15}	L_2	L_1	D_2	Teeth	Part No. (Complete Mandrel*)
	0.6929 - 0.8503	17.60 - 21.59	11.2	1	11	81	116	50	6	**4355-MC-010**
	0.8504 - 1.0078	21.60 - 25.59	11.2	1	12	81	116	50	6	**4355-MC-020**
	1.0079 - 1.1653	25.60 - 29.59	15.1	1	14	102	137	50	6	**4355-MC-030**
	1.1654 - 1.2834	29.60 - 32.59	15.1	1	14	102	137	50	6	**4355-MC-035**
	1.2835 - 1.4408	32.60 - 36.59	203	1	16	102	137	50	6	**4355-MC-040**
	1.4409 - 1.5983	36.60 - 40.59	20.3	1	16	102	137	50	6	**4355-MC-045**
	1.5984 - 1.7952	40.60 - 45.59	24.1	1	16	102	137	50	6	**4355-MC-050**
m	1.7953 - 1.9527	45.60 - 49.59	27.9	1.5	18.5	105	140	50	6	**4355-MC-060**
	1.9528 - 2.1889	49.60 - 55.59	27.9	1.5	18.5	105	140	50	6	**4355-MC-070**
	2.1890 - 2.3857	55.60 - 60.59	27.9	1.5	18.5	105	140	50	6	**4355-MC-075**
	2.3858 - 2.5826	60.60 - 65.59	37.1	1.5	18.5	105	140	63	6	**4355-MC-080**
	2.5827 - 2.7794	65.60 - 70.59	37.1	1.5	18.5	105	140	63	6	**4355-MC-085**
	2.7795 - 3.1338	70.60 - 79.59	37.1	1.5	18.5	105	140	63	6	**4355-MC-090**
	3.1339 - 3.5668	79.60 - 90.59	53.1	1.5	18.5	105	140	63	8	**4355-MC-100**
	3.5669 - 3.9602	90.60 - 100.59	53.1	1.5	18.5	105	140	63	8	**4355-MC-110**

*Complete mandrel does not include cutting ring.

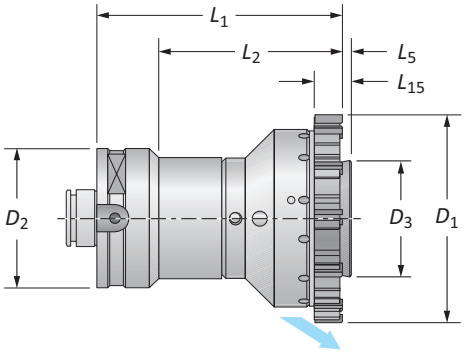

	D_1 Range		Mandrel					Shank		
	Imperial (inch)	Metric (mm)	D_3	L_5	L_{15}	L_2	L_1	D_2	Teeth	Part No. (Complete Mandrel*)
	3.9603 - 4.3539	100.60 - 110.59	70.3	1.5	18.5	–	140	80	10	**4355-MC-120**
	4.3540 - 4.5508	110.60 - 115.59	76.3	1.5	18.5	–	140	80	12	**4355-MC-130**
	4.5509 - 4.7476	115.60 - 120.59	83.3	1.5	18.5	–	140	80	12	**4355-MC-140**
	4.7477 - 4.9445	120.60 - 125.59	87.3	1.5	18.5	–	140	80	12	**4355-MC-150**
	4.9446 - 5.2201	125.60 - 132.59	87.3	1.5	18.5	–	140	80	12	**4355-MC-160**
	5.2202 - 5.4957	132.60 - 139.59	87.3	1.5	18.5	–	140	80	12	**4355-MC-170**
m	5.4958 - 5.7319	139.60 - 145.59	99.3	1.5	18.5	–	140	80	12	**4355-MC-180**
	5.7320 - 6.1256	145.60 - 155.59	104.3	1.5	18.5	–	140	80	12	**4355-MC-190**
	6.1257 - 6.5193	155.60 - 165.59	104.3	1.5	18.5	–	140	80	12	**4355-MC-200**
	6.5194 - 6.9130	165.60 - 175.59	114.3	1.5	18.5	–	140	80	12	**4355-MC-210**
	6.9131 - 7.3067	175.60 - 185.59	124.3	1.5	18.5	–	140	80	12	**4355-MC-220**
	7.3068 - 7.7004	185.60 - 195.59	134.3	1.5	18.5	–	140	80	12	**4355-MC-230**
	7.7005 - 7.8972	195.60 - 200.59	142.3	1.5	18.5	–	140	80	12	**4355-MC-240**

*Complete mandrel does not include cutting ring.

C: 62 - 73
Key on C: 1
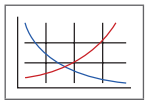
C: 32 - 33

C: 54 - 61
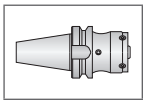
C: 76

i = Imperial (in)
m = Metric (mm)

Ring Style Mandrels

4355 Series | Standard Length | Spare Parts

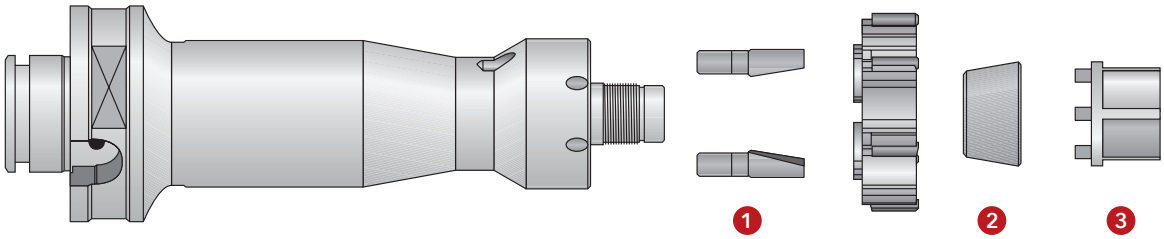

	Part No. (Complete Mandrel*)	Spare Parts 1 Drive Pins	1 Number of Drive Pins	2 Conical Ring	2 Conical Ring (2nd Expansion)	2 Conical Ring (3rd Expansion)	3 Adjusting Key	Wrench Size (mm)
	4355-MC-010	2000-CO-010	3	4001-AC-115	4001-AC-215	–	4001-CH-015	10
	4355-MC-020	2000-CO-020	3	4001-AC-115	4001-AC-215	–	4001-CH-015	10
	4355-MC-030	2000-CO-030	3	4001-AC-125	4001-AC-225	4001-AC-325	4001-CH-025	13
	4355-MC-035	2000-CO-040	2	4001-AC-125	4001-AC-225	4001-AC-325	4001-CH-025	13
	4355-MC-040	2000-CO-040	2	4001-AC-135	4001-AC-235	4001-AC-335	4001-CH-035	18
	4355-MC-045	2000-CO-050	2	4001-AC-135	4001-AC-235	4001-AC-335	4001-CH-035	18
	4355-MC-050	2000-CO-060	2	4001-AC-145	4001-AC-245	4001-AC-345	4001-CH-045	22
m	**4355-MC-060**	2000-CO-060	2	4001-AC-155	4001-AC-255	4001-AC-355	4001-CH-055	26
	4355-MC-070	2000-CO-070	2	4001-AC-155	4001-AC-255	4001-AC-355	4001-CH-055	26
	4355-MC-075	2000-CO-080	2	4001-AC-155	4001-AC-255	4001-AC-355	4001-CH-055	26
	4355-MC-080	2000-CO-080	2	4001-AC-165	4001-AC-265	4001-AC-365	4001-CH-065	34
	4355-MC-085	2000-CO-090	2	4001-AC-165	4001-AC-265	4001-AC-365	4001-CH-065	34
	4355-MC-090	2000-CO-090	2	4001-AC-165	4001-AC-265	4001-AC-365	4001-CH-065	34
	4355-MC-100	2000-CO-090	2	4001-AC-185	4001-AC-285	4001-AC-385	4001-CH-085	46
	4355-MC-110	2000-CO-090	2	4001-AC-185	4001-AC-285	4001-AC-385	4001-CH-085	46

*Complete mandrel does not include cutting ring.

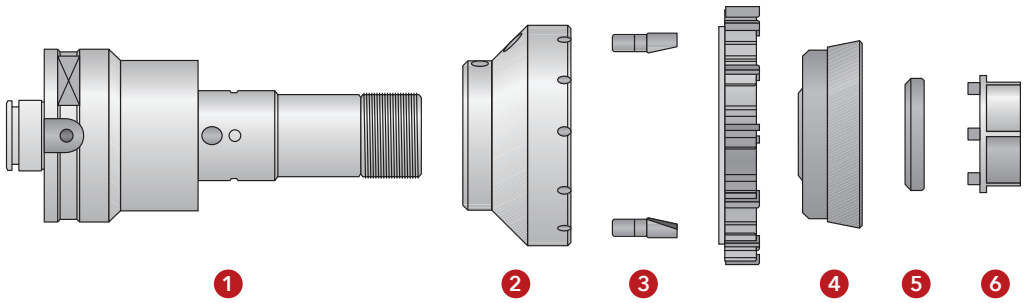

	Part No. (Complete Mandrel*)	Spare Parts 1 Mandrel	2 Flange	3 Drive Pins	3 Number of Drive Pins	4 Conical Ring	5 Nut	6 Adjusting Key	Wrench Size (mm)
	4355-MC-120	4355-MA-120	4355-FL-035	2000-CO-090	2	4001-AC-116	4001-GH-035	4001-CH-135	46
	4355-MC-130	4355-MA-120	4355-FL-045	2000-CO-090	2	4001-AC-126	4001-GH-035	4001-CH-135	46
	4355-MC-140	4355-MA-120	4355-FL-055	2000-CO-090	2	4001-AC-136	4001-GH-035	4001-CH-135	46
	4355-MC-150	4355-MA-120	4355-FL-065	2000-CO-090	2	4001-AC-136	4001-GH-035	4001-CH-135	46
	4355-MC-160	4355-MA-120	4355-FL-075	2000-CO-100	2	4001-AC-146	4001-GH-035	4001-CH-135	46
	4355-MC-170	4355-MA-120	4355-FL-085	2000-CO-100	2	4001-AC-146	4001-GH-035	4001-CH-135	46
m	**4355-MC-180**	4355-MA-120	4355-FL-095	2000-CO-100	2	4001-AC-156	4001-GH-035	4001-CH-135	46
	4355-MC-190	4355-MA-120	4355-FL-105	2000-CO-110	2	4001-AC-166	4001-GH-035	4001-CH-135	46
	4355-MC-200	4355-MA-200	4355-FL-115	2000-CO-110	2	4001-AC-176	4001-GH-115	4001-CH-115	46
	4355-MC-210	4355-MA-200	4355-FL-125	2000-CO-110	2	4001-AC-186	4001-GH-115	4001-CH-115	46
	4355-MC-220	4355-MA-200	4355-FL-135	2000-CO-120	2	4001-AC-196	4001-GH-115	4001-CH-115	46
	4355-MC-230	4355-MA-200	4355-FL-145	2000-CO-120	2	4001-AC-117	4001-GH-115	4001-CH-115	46
	4355-MC-240	4355-MA-200	4355-FL-155	2000-CO-120	2	4001-AC-127	4001-GH-115	4001-CH-115	46

*Complete mandrel does not include cutting ring.

i = Imperial (in)
m = Metric (mm)

A DRILLING
B BORING
C REAMING
D BURNISHING
E THREADING
X SPECIALS

Ring Style Mandrels

4300 Series | Long Length | Diameter Range: 0.6929” - 3.9602 (17.60mm - 100.59mm)

Series	4300
Shank Type	Modular
Application	Through Holes
Coolant	Radial

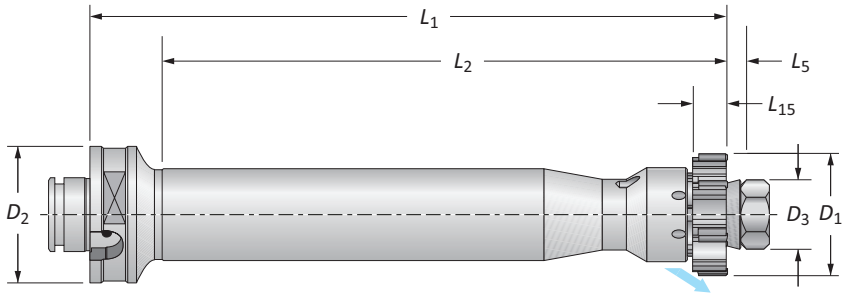

	D_1 Range		Mandrel							
	Imperial (inch)	**Metric (mm)**	D_3	L_5	L_{15}	L_2	L_1	D_2	**Teeth**	**Part No.** (Complete Mandrel*)
	0.6929 - 0.8503	17.60 - 21.59	12	11	11	121	156	50	6	**4300-MC-010**
	0.8504 - 1.0078	21.60 - 25.59	12	11	12	121	156	50	6	**4300-MC-020**
	1.0079 - 1.2834	25.60 - 32.59	15.6	11	14	153	188	50	6	**4300-MC-030**
	1.2835 - 1.5983	32.60 - 40.59	22	14	16	179	214	50	6	**4300-MC-040**
	1.5984 - 1.7952	40.60 - 45.59	25.4	15	16	201	236	50	6	**4300-MC-050**
m	1.7953 - 1.9527	45.60 - 49.59	30	20.5	18.5	214	249	50	6	**4300-MC-060**
	1.9528 - 2.3857	49.60 - 60.59	30	20.5	18.5	214	249	50	6	**4300-MC-070**
	2.3858 - 2.7794	60.60 - 70.59	40	24.5	18.5	237	272	63	6	**4300-MC-080**
	2.7795 - 3.1338	70.60 - 79.59	40	24.5	18.5	237	272	63	6	**4300-MC-090**
	3.1339 - 3.5668	79.60 - 90.59	56	28.5	18.5	245	280	63	8	**4300-MC-100**
	3.5669 - 3.9602	90.60 - 100.59	56	28.5	18.5	245	280	63	8	**4300-MC-110**

*Complete mandrel does not include cutting ring.

C: 62 - 73
Key on C: 1
C: 32 - 33
C: 54 - 61
C: 76

i = Imperial (in)
m = Metric (mm)

Ring Style Mandrels

4300 Series | Long Length | Spare Parts

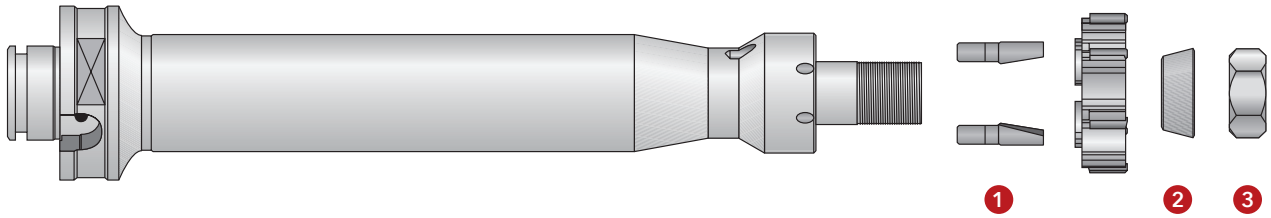

	Part No. (Complete Mandrel*)	Spare Parts 1 Drive Pins	Number of Drive Pins	2 Conical Ring	3 Nut	Wrench Size (mm)
	4300-MC-010	2000-CO-010	3	2010-AC-010	2000-DA-010	10
	4300-MC-020	2000-CO-020	3	2010-AC-010	2000-DA-010	10
	4300-MC-030	2000-CO-030	3	2010-AC-020	2000-DA-020	13
	4300-MC-040	2000-CO-040	2	2010-AC-030	2000-DA-060	19
	4300-MC-050	2000-CO-060	2	2010-AC-040	2000-DA-090	22
m	**4300-MC-060**	2000-CO-060	2	2010-AC-050	2000-GH-880	30
	4300-MC-070	2000-CO-070	2	2010-AC-050	2000-GH-880	30
	4300-MC-080	2000-CO-080	2	2010-AC-060	2000-GH-900	40
	4300-MC-090	2000-CO-090	2	2010-AC-060	2000-GH-900	40
	4300-MC-100	2000-CO-090	2	2010-AC-070	2000-GH-920	56
	4300-MC-110	2000-CO-090	2	2010-AC-070	2000-GH-920	56

*Complete mandrel does not include cutting ring.

i = Imperial (in)
m = Metric (mm)

A DRILLING
B BORING
C REAMING
D BURNISHING
E THREADING
X SPECIALS

Ring Style Mandrels

4305 Series | Long Length | Diameter Range: 0.6929” - 3.9602 (17.60mm - 100.59mm)

Series	4305
Shank Type	Modular
Application	Blind Holes
Coolant	Radial

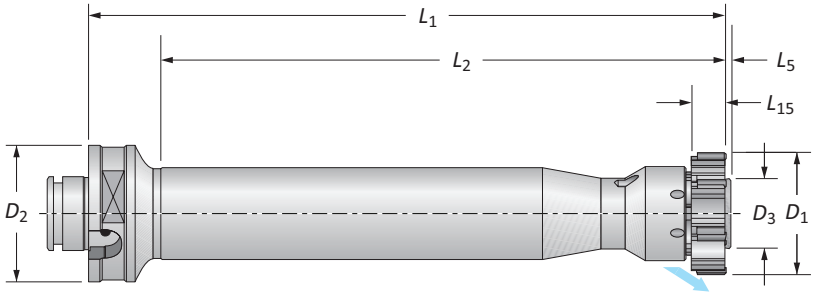

	D_1 Range		Mandrel						
	Imperial (inch)	Metric (mm)	L_5	L_{15}	L_2	L_1	D_2	Teeth	Part No. (Complete Mandrel*)
	0.6929 - 0.8503	17.60 - 21.59	1	11	121	156	50	6	**4305-MC-010**
	0.8504 - 1.0078	21.60 - 25.59	1	12	121	156	50	6	**4305-MC-020**
	1.0079 - 1.1653	25.60 - 29.59	1	14	153	188	50	6	**4305-MC-030**
	1.1654 - 1.2834	29.60 - 32.59	1	14	153	188	50	6	**4305-MC-035**
	1.2835 - 1.4408	32.60 - 36.59	1	16	179	214	50	6	**4305-MC-040**
	1.4409 - 1.5983	36.60 - 40.59	1	16	179	214	50	6	**4305-MC-045**
	1.5984 - 1.7952	40.60 - 45.59	1	16	201	236	50	6	**4305-MC-050**
m	1.7953 - 1.9527	45.60 - 49.59	1.5	18.5	214	249	50	6	**4305-MC-060**
	1.9528 - 2.1889	49.60 - 55.59	1.5	18.5	214	249	50	6	**4305-MC-070**
	2.1890 - 2.3857	55.60 - 60.59	1.5	18.5	214	249	50	6	**4305-MC-075**
	2.3858 - 2.5826	60.60 - 65.59	1	18.5	237	272	63	6	**4305-MC-080**
	2.5827 - 2.7794	65.60 - 70.59	1	18.5	237	272	63	6	**4305-MC-085**
	2.7795 - 3.1338	70.60 - 79.59	1	18.5	237	272	63	6	**4305-MC-090**
	3.1339 - 3.5668	79.60 - 90.59	1.5	18.5	245	280	63	8	**4305-MC-100**
	3.5669 - 3.9602	90.60 - 100.59	1.5	18.5	245	280	63	8	**4305-MC-110**

*Complete mandrel does not include cutting ring.

C: 62 - 73
Key on C: 1
C: 32 - 33
C: 54 - 61
C: 76

i = Imperial (in)
m = Metric (mm)

Ring Style Mandrels

4305 Series | Long Length | Spare Parts

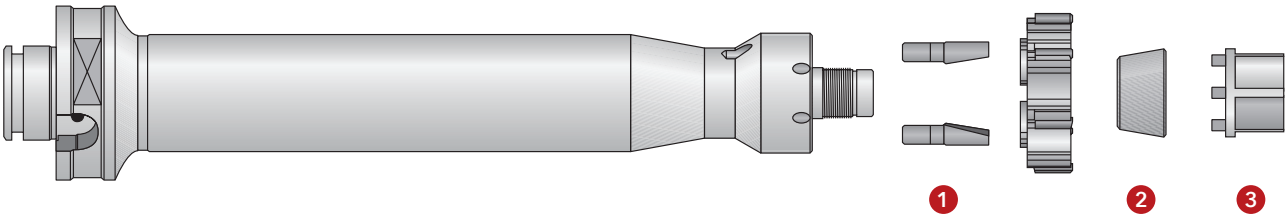

	Part No. (Complete Mandrel*)	Spare Parts 1: Drive Pins	Number of Drive Pins	2: Conical Ring	Conical Ring (2nd Expansion)	Conical Ring (3rd Expansion)	3: Adjusting Key	Wrench Size (mm)
	4305-MC-010	2000-CO-010	3	4001-AC-115	4001-AC-215	–	4001-CH-015	10
	4305-MC-020	2000-CO-020	3	4001-AC-115	4001-AC-215	–	4001-CH-015	10
	4305-MC-030	2000-CO-030	3	4001-AC-125	4001-AC-225	4001-AC-325	4001-CH-025	13
	4305-MC-035	2000-CO-040	2	4001-AC-125	4001-AC-225	4001-AC-325	4001-CH-025	13
	4305-MC-040	2000-CO-040	2	4001-AC-135	4001-AC-235	4001-AC-335	4001-CH-035	18
	4305-MC-045	2000-CO-050	2	4001-AC-135	4001-AC-235	4001-AC-335	4001-CH-035	18
	4305-MC-050	2000-CO-060	2	4001-AC-145	4001-AC-245	4001-AC-345	4001-CH-045	22
m	**4305-MC-060**	2000-CO-060	2	4001-AC-155	4001-AC-255	4001-AC-355	4001-CH-055	26
	4305-MC-070	2000-CO-070	2	4001-AC-155	4001-AC-255	4001-AC-355	4001-CH-055	26
	4305-MC-075	2000-CO-080	2	4001-AC-155	4001-AC-255	4001-AC-355	4001-CH-055	26
	4305-MC-080	2000-CO-080	2	4001-AC-165	4001-AC-265	4001-AC-365	4001-CH-065	34
	4305-MC-085	2000-CO-090	2	4001-AC-165	4001-AC-265	4001-AC-365	4001-CH-065	34
	4305-MC-090	2000-CO-090	2	4001-AC-165	4001-AC-265	4001-AC-365	4001-CH-065	34
	4305-MC-100	2000-CO-090	2	4001-AC-185	4001-AC-285	4001-AC-385	4001-CH-085	46
	4305-MC-110	2000-CO-090	2	4001-AC-185	4001-AC-285	4001-AC-385	4001-CH-085	46

*Complete mandrel does not include cutting ring.

i = Imperial (in)
m = Metric (mm)

Radial Adjusting Shanks

Large range of shanks for different machine types	Highly adjustable for improved concentricity	All shanks are available with through coolant

All the Pieces You Need

Modular System courtesy of Ceriu

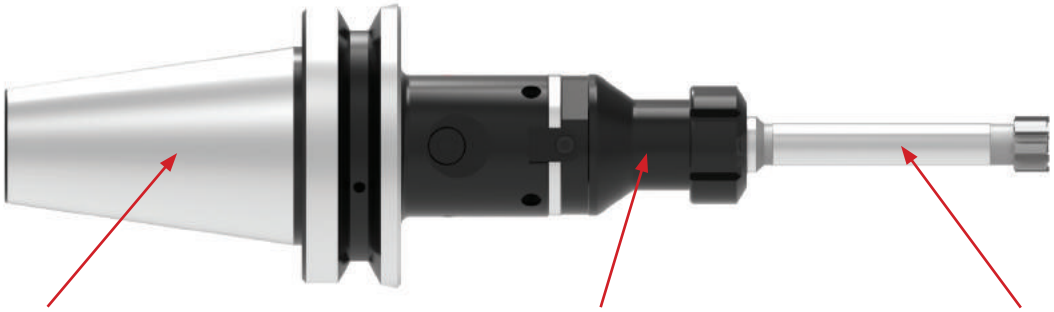

DIN 69871/1 B and A

HSK-A DIN 69893/1

JMTBA MAS-403
BT B and BT

Straight

Collet Chuck Adapter

Cylindrical Shank Adapter

Radial Adjusting Shanks

Set-up Information

Radial Adjusting Shanks and Ring Style Arbors

The following is a quick guide for setting up a radial adjusting shank and a ring style reamer. The ring reamer arbor does not contain the tang needed to connect to the shank. The tang must first be removed the from the shank and then installed into the reamer arbor (demonstrated below).

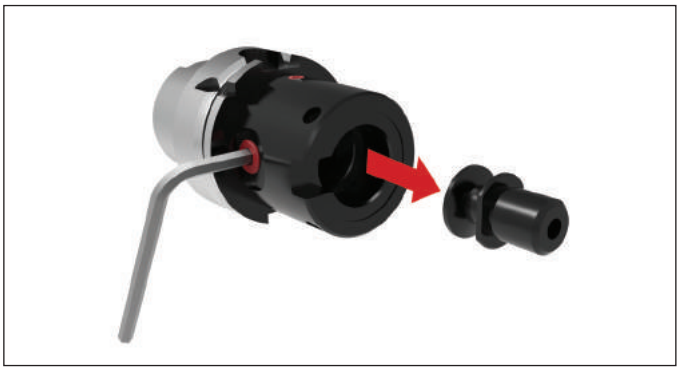

Step 1:
The tang comes installed with the shank. Loosen the clamping screw on each side and remove the tang from the shank.

Step 2:
Thread the tang into the back end of the ring arbor. Use a bench vise and wrench to tighten.

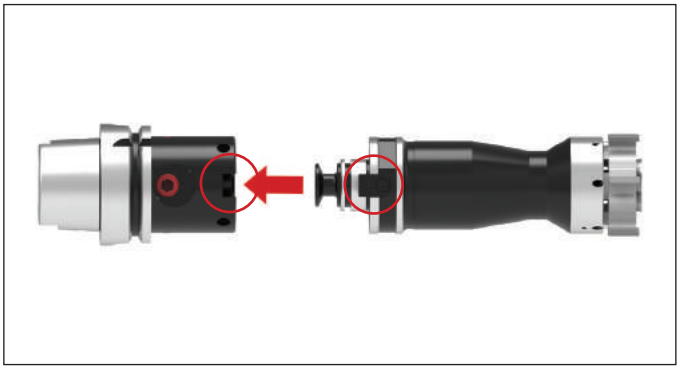

Step 3:
Assemble the ring arbor to the shank. With the clamping screws still loosened, align the key on the arbor to the keyway on the shank.

Step 4:
Once the ring arbor is connected with the shank, tighten the clamping screws to secure the tang back into place.

Radial Adjusting Shanks

DIN 69871/1 B and A

Maximum radial adjustment is ±0.008" (0.20mm) on diameter

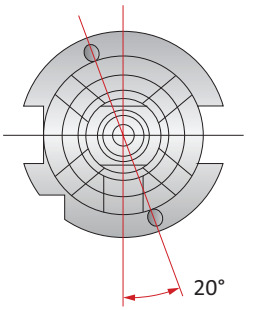

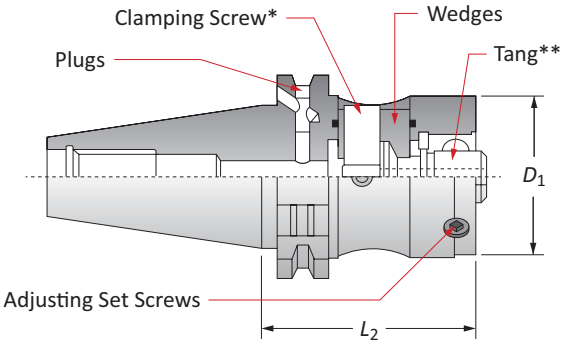

Shank					Spare Parts					
ISO Taper	D_1	L_2	Retention Knob Thread Size	Part No.	Wedges + O-Ring	Clamping Screw*	Adjusting Set Screws	Plugs	Replacement Tang**	Clamping Screw Key
40	50	65	M16 x 2	**02B.40.50L.65**	ATR14102.2.3	ATR14102.1	M8x1x10G	M5x5TG	ATT14103	6mm
40	63	85	M16 x 2	**02B.40.63L.85**	ATR14108.2.3	ATR14108.1	M8x1x14G	M5x5TG	ATT14104	6mm
45	50	70	M20 x 2.5	**02B.45.50L.70**	ATR14102.2.3	ATR14102.1	M8x1x10G	M5x5TG	ATT14103	6mm
45	63	70	M20 x 2.5	**02B.45.63L.70**	ATR14108.2.3	ATR14108.1	M8x1x14G	M5x5TG	ATT14104	6mm
50	50	70	M24 x 3	**02B.50.50L.70**	ATR14102.2.3	ATR14102.1	M8x1x10G	M5x5TG	ATT14103	6mm
50	63	70	M24 x 3	**02B.50.63L.70**	ATR14108.2.3	ATR14108.1	M8x1x14G	M5x5TG	ATT14104	6mm
50	80	70	M24 x 3	❖ **02B.50.80L.70**	ATR18775.2.3	ATR18775.1	M8x1x20G	M5x5TG	ATT14104	6mm

* Light torque exerted on the clamping screw transmits high axial forces, which provide stiffness and extreme accuracy to the assembly.
** Tang must be fitted to all reamer arbors and adapters prior to assembly.
❖ Could cause interference with tool changer mechanism.
NOTE: Shanks can be converted into DIN 69871/1A coolant by screwing the two plugs clockwise to the end of their stroke.

C: 55
Key on C: 1

Modular System courtesy of Ccerit

Reference Key

Symbol	Attribute
D_1	Modular shank size
L_2	Gage length

Radial Adjusting Shanks

JMTBA MAS-403 BT B and BT

Maximum radial adjustment is ±0.008" (0.20mm) on diameter.

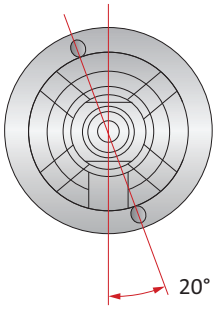

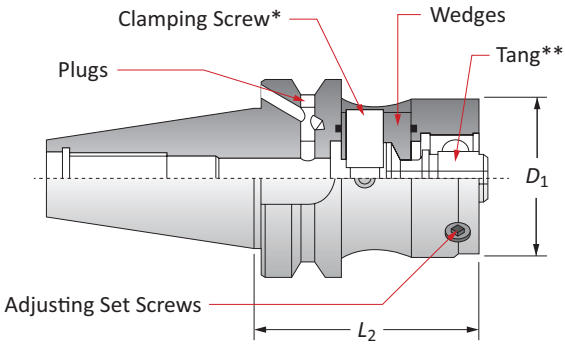

Shank					Spare Parts					
BT Taper	D_1	L_2	Retention Knob Thread Size	Part No.	Wedges + O-ring	Clamping Screw*	Adjusting Set Screws	Plugs	Replacement Tang**	Clamping Screw Key
40	50	70	M16 x 2	**BTB.40.50L.70**	ATR14102.2.3	ATR14102.1	M8x1x10G	M5x5TG	ATT14103	6mm
40	63	80	M16 x 2	**BTB.40.63L.80**	ATR14108.2.3	ATR14108.1	M8x1x14G	M5x5TG	ATT14104	6mm
50	50	90	M24 x 3	**BTB.50.50L.90**	ATR14102.2.3	ATR14102.1	M8x1x10G	M5x5TG	ATT14103	6mm
50	63	90	M24 x 3	**BTB.50.63L.90**	ATR14108.2.3	ATR14108.1	M8x1x14G	M5x5TG	ATT14104	6mm
50	80	90	M24 x 3	**BTB.50.80L.90**	ATR18775.2.3	ATR18775.1	M8x1x20G	M5x5TG	ATT14104	6mm

* Light torque exerted on the clamping screw transmits high axial forces, which provide stiffness and extreme accuracy to the assembly.
** Tang must be fitted to all ring arbors and adapters prior to assembly.
NOTE: Shanks can be converted into MAS-403 BT coolant by screwing the two plugs clockwise to the end of their stroke.

C: 55
Key on C: 1

Modular System courtesy of Cerit

Reference Key

Symbol	Attribute
D_1	Modular shank size
L_2	Gage length

Radial Adjusting Shanks

HSK-A DIN 69893/1

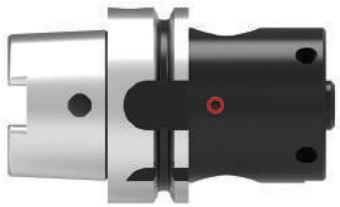

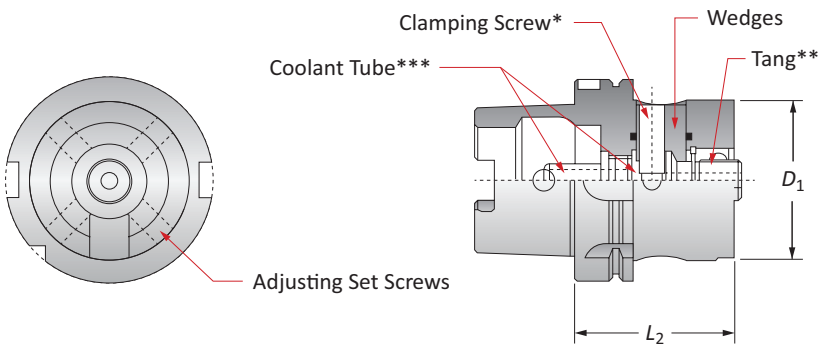

Shank				Spare Parts						
HSK	D_1	L_2	Part No.	Wedges + O-Ring	Clamping Screw*	Adjusting Set Screws	Replacement Tang**	Clamping Screw Key	Coolant Tube Key	Coolant Tube***
63	50	70	**HSKA.63.50L.70**	ATR14102.2.3	ATR14102.1	M8x1x10G	ATT14103	6mm	ATR23856	ATT23728
63	63	75	**HSKA.63.63L.75**	ATR.41613.4	ATR14108.1	M8x1x14G	ATT14104	6mm	ATR23856	ATT23728
100	50	80	**HSKA.100.50L.80**	ATR14102.2.3	ATR14102.1	M8x1x10G	ATT14103	6mm	ATR23856	ATT23656
100	63	80	**HSKA.100.63L.80**	ATR14108.2.3	ATR14108.1	M8x1x14G	ATT14104	6mm	ATR23856	ATT23656
100	80	80	**HSKA.100.80L.80**	ATR18775.2.3	ATR18775.1	M8x1x20G	ATT14104	6mm	ATR23856	ATT23656

* Light torque exerted on the clamping screw transmits high axial forces, which provide stiffness and extreme accuracy to the assembly.
** Tang must be fitted to all ring arbors and adapters prior to assembly.
*** Coolant tube sold separately.

C: 55
Key on C: 1

Modular System courtesy of Ccerit

Reference Key

Symbol	Attribute
D_1	Modular shank size
L_2	Gage length

Radial Adjusting Shanks

Straight

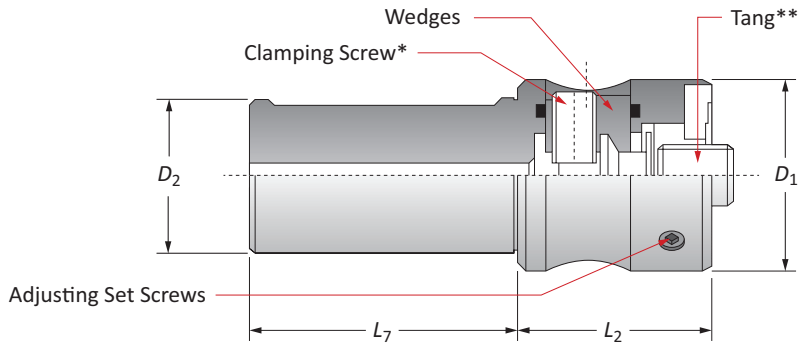

Shank					Spare Parts				
D_1	D_2	L_2	L_7	Part No.	Wedges + O-Ring	Clamping Screw*	Adjusting Set Screws	Replacement Tang**	Clamping Screw Key
50	25	50	70	**CIL.25.50.50**	ATR14102.2.3	ATR14102.1	M8x1x10G	ATT14103	6mm
50	32	50	70	**CIL.32.50.50**	ATR14102.2.3	ATR14102.1	M8x1x10G	ATT14103	6mm
50	40	50	70	**CIL.40.50.50**	ATR14102.2.3	ATR14102.1	M8x1x10G	ATT14103	6mm

* Light torque exerted on the clamping screw transmits high axial forces, which provide stiffness and extreme accuracy to the assembly.
** Tang must be fitted to all ring arbors and adapters prior to assembly.

C: 55
Key on C: 1

Modular System courtesy of Cerit

Reference Key

Symbol	Attribute
D_1	Modular shank size
D_2	Shank diameter
L_2	Gage length
L_7	Shank length

Radial Adjusting Adapters

Collet Chuck Adapters

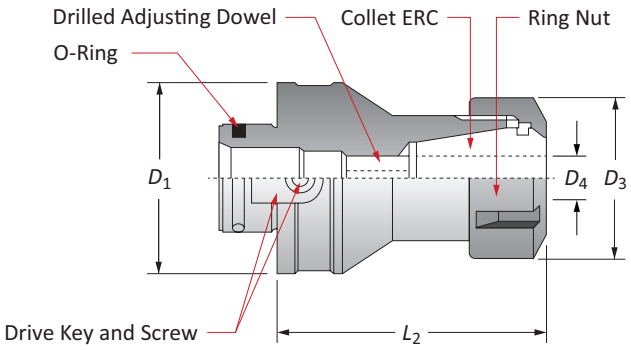

Adapter						Spare Parts					
Collet Sleeve Size*	D_1	D_3	D_4	L_2	Part No.	Clamping Screw	Ring Nut	Adjusting Dowel	Drive Key	Ring Nut Wrench	Adjusting Dowel Key
ERC25	42	50	0.5 - 16mm	70	**30.50R.25.70**	M4x8V	G25S	M12x16GF	TAB3924	CH25S	6mm
ERC32	50	50	1 - 20mm	70	**30.50R.32.70**	M4x8V	G32S	M16x15x18GF	TAB3924	CH32S	8mm
ERC32	50	63	1 - 20mm	90	**30.63R.32.90**	M6x12V	G32S	M12x16GF	TAB3923.1	CH32S	6mm
ERC40	63	63	2 - 30mm	90	**30.63R.40.90**	M6x12V	G40S	M20x2x20GF	TAB3923.1	CH40S	10mm
ERC32	50	80	1 - 20mm	90	**30.80R.32.90**	M6x16V	G32S	M12x16GF	TAB3923.2	CH32S	6mm
ERC40	63	80	2 - 30mm	90	**30.80R.40.90**	M6x16V	G40S	M20x2x20GF	TAB3923.2	CH40S	10mm

*Collet sleeve not included

Reference Key

Symbol	Attribute
D_1	Modular shank size
D_3	Body diameter
D_4	Shank diameter
L_2	Gage length

C: 55
Key on C: 1

Modular System courtesy of cerit

Radial Adjusting Adapters

Cylindrical Shank Adapters

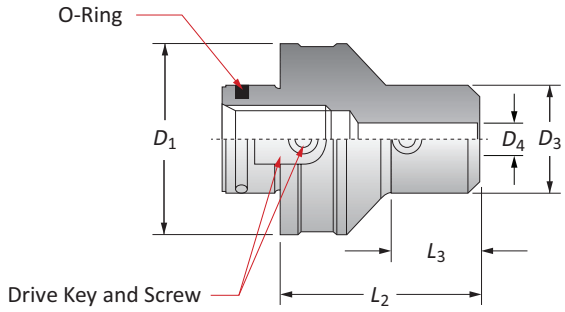

Adapter						Spare Parts			
D_1	D_4	D_3	L_2	L_3	Part No.	Drive Key	Screw	Set Screw	Set Screw Key
50	6	25	50	22.5	**35.50R.06.50**	TAB3924	M4x8V	M6x8G	3mm
50	8	28	50	24.5	**35.50R.08.50**	TAB3924	M4x8V	M8x8G	4mm
50	10	35	50	26.5	**35.50R.10.50**	TAB3924	M4x8V	M10x10G	5mm
50	12	42	60	38.5	**35.50R.12.60**	TAB3924	M4x8V	M12x12G	6mm
50	14	44	60	42	**35.50R.14.60**	TAB3924	M4x8V	M12x12G	6mm
50	16	48	60	40	**35.50R.16.60**	TAB3924	M4x8V	M14x14G	6mm
50	18	50	60	–	**35.50R.18.60**	TAB3924	M4x8V	M14x14G	6mm
50	20	52	60	41	**35.50R.20.60**	TAB3924	M4x8V	M16x2x14G	8mm
63	8	28	60	28	**35.63R.08.60**	TAB3923.1	M6x12V	M8x8G	4mm
63	10	35	70	40	**35.63R.10.70**	TAB3923.1	M6x12V	M10x10G	5mm
63	12	42	70	42	**35.63R.12.70**	TAB3923.1	M6x12V	M12x12G	6mm
63	14	44	60	32	**35.63R.14.60**	TAB3923.1	M6x12V	M12x12G	6mm
63	16	48	70	44	**35.63R.16.70**	TAB3923.1	M6x12V	M14x14G	6mm
63	18	50	70	40	**35.63R.18.70**	TAB3923.1	M6x12V	M14x14G	6mm
63	20	52	70	45	**35.63R.20.70**	TAB3923.1	M6x12V	M16x2x14G	8mm
50	25	65	80	61	**40.50R.25.80**	TAB3924	M4x8V	M18x2x18G	8mm
50	32	72	80	65	**40.50R.32.80**	TAB3924	M4x8V	M20x2x18G	10mm
63	25	65	80	58	**40.63R.25.80**	TAB3923.1	M6x12V	M18x2x18G	8mm
63	32	72	80	–	**40.63R.32.80**	TAB3923.1	M6x12V	M20x2x18G	10mm
80	25	65	80	50.5	**40.80R.25.80**	TAB3923.2	M6x12V	M18x2x18G	8mm
80	32	72	80	54	**40.80R.32.80**	TAB3923.2	M6x12V	M20x2x18G	10mm

Reference Key

Symbol	Attribute
D_1	Modular shank size
D_3	Body diameter
D_4	Shank diameter
L_2	Gage length
L_3	Reference length

C: 55
Key on C: 1

Modular System courtesy of Ccerit

Recommended Cutting Data | Imperial (inch)

Replaceable Head Style

ISO	Material	Hardness (BHN)	Speed (SFM) Uncoated Carbide	Speed (SFM) Coated Carbide	Speed (SFM) Cermet	Recommended Feed (IPR) by Reamer Diameter .4646 - .8504 Lead A, G	.4646 - .8504 Lead E, N, M	.8505 - 1.5590 Lead A, G	.8505 - 1.5590 Lead E, N, M	1.5591 - 2.3858 Lead A, G	1.5591 - 2.3858 Lead E, N, M
P	**Free Machining Steel**	100 - 180	35 - 65	200 - 260	300 - 980	.010 - .024	.020 - .024	.012 - .031	.024 - .047	.024 - .039	.028 - .059
	1118, 1215, 12L14, etc.	180 - 250	25 - 50	130 - 230	260 - 600	.012 - .024	.016 - .031	.016 - .031	.020 - .039	.020 - .035	.024 - .047
	Low Carbon Steel	85 - 180	35 - 65	200 - 260	300 - 980	.010 - .024	.020 - .024	.012 - .031	.024 - .047	.024 - .039	.028 - .059
	1010, 1020, 1025, 1522, 1144, etc.	180 - 275	25 - 50	130 - 230	260 - 600	.012 - .024	.016 - .031	.016 - .031	.020 - .039	.020 - .035	.024 - .047
	Medium Carbon Steel	125 - 180	35 - 65	200 - 260	300 - 980	.010 - .024	.020 - .024	.012 - .031	.024 - .047	.024 - .039	.028 - .059
	1030, 1040, 1050, 1527, 1140, 1151, etc.	180 - 325	25 - 50	130 - 230	260 - 600	.012 - .024	.016 - .031	.016 - .031	.020 - .039	.020 - .035	.024 - .047
	Alloy Steel	125 - 180	25 - 50	130 - 230	260 - 600	.010 - .024	.020 - .024	.012 - .031	.024 - .047	.024 - .039	.028 - .059
	4140, 5140, 8640, etc.	180 - 375	15 - 35	50 - 100	200 - 390	.012 - .024	.016 - .031	.016 - .031	.020 - .039	.020 - .035	.024 - .047
	High Strength Alloy 4340, 4330V, 300M, etc.	240 - 450	15 - 35	50 - 100	200 - 390	.010 - .020	.012 - .024	.012 - .024	.016 - .031	.016 - .028	.020 - .039
	Structural Steel	125 - 180	35 - 65	200 - 260	300 - 980	.010 - .024	.020 - .024	.012 - .031	.024 - .047	.024 - .039	.028 - .059
	A36, A285, A516	180 - 350	25 - 50	130 - 230	260 - 600	.012 - .024	.016 - .031	.016 - .031	.020 - .039	.020 - .035	.024 - .047
	Tool Steel	150 - 200	35 - 65	200 - 260	300 - 980	.010 - .024	.020 - .024	.012 - .031	.024 - .047	.024 - .039	.028 - .059
	H-13, H-21, A-4, 0-2, S-3, etc.	200 - 250	25 - 50	130 - 230	260 - 600	.012 - .024	.016 - .031	.016 - .031	.020 - .039	.020 - .035	.024 - .047
S	**High Temp Alloy** Hastelloy B, Inconel 600, etc.	140 - 310	20 - 50	60 - 200	–	.008 - .016	–	.012 - .020	–	.016 - .024	–
	Titanium Alloy	140 - 310	20 - 50	60 - 200	–	.008 - .016	–	.012 - .020	–	.016 - .024	–
M	**Stainless Steel 400 Series** 416, 420, etc.	135 - 350	20 - 35	100 - 160	200 - 490	.012 - .024	.016 - .031	.016 - .031	.020 - .039	.020 - .035	.024 - .047
	Stainless Steel 300 Series 304, 316, 17-4PH, etc.	135 - 275	20 - 35	100 - 160	200 - 490	.012 - .024	.016 - .031	.016 - .031	.020 - .039	.020 - .035	.024 - .047
K	**Grey Cast Iron, Ductile Cast Iron,**	< 200	65 - 130	160 - 230	–	.008 - .024	.020 - .039	.012 - .028	.024 - .047	.024 - .051	.031 - .063
	Spheroidal Cast Iron (Pearlitic)	> 200	50 - 100	160 - 230	–	.008 - .024	.020 - .039	.012 - .028	.024 - .047	.024 - .051	.031 - .063
	Spheroidal Cast Iron (Ferritic)	260 - 320	30 - 50	100 - 160	200 - 400	.008 - .024	.020 - .024	.012 - .028	.024 - .047	.016 - .031	.031 - .063
N	**Copper and Alloys Brass**	< 500	200 - 660	330 - 660	–	.008 - .024	–	.012 - .028	–	.016 - .031	–
	Bronze Bronze Phosphorous	< 180	65 - 130	260 - 520	330 - 980	.012 - .024	.016 - .039	.012 - .024	.020 - .047	.012 - .024	.024 - .059
	Aluminum and Alloys	< 150	65 - 660	–	–	.012 - .024	–	.016 - .039	–	.016 - .039	–

Formulas

1. **RPM = (SFM • 3.82) / DIA**

where:

RPM = revolutions per minute (rev/min)
SFM = speed (ft/min)
DIA = diameter of reamer (inch)

2. **IPM = RPM • IPR**

where:

IPM = inches per minute (in/min)
RPM = revolutions per minute (rev/min)
IPR = feed rate (in/rev)

3. **SFM = RPM • 0.262 • DIA**

where:

SFM = speed (ft/min)
RPM = revolutions per minute (rev/min)
DIA = diameter of reamer (inch)

IMPORTANT: The speeds and feeds listed on these pages are a general starting point for all applications. Factory technical assistance is available through our Application Engineering department.

Stock Allowance and Coolant | Imperial (inch)

Replaceable Head Style

ISO	Material	Hardness (BHN)	Coolant	Recommended Stock (inch) by Reamer Diameter* .4646 - .8504	.8505 - 1.5590	1.5591 - 2.3858
P	**Free Machining Steel**	100 - 180	Water Soluble Cutting Oil	.006 - .010	.008 - .016	.012 - .016
	1118, 1215, 12L14, etc.	180 - 250				
	Low Carbon Steel	85 - 180				
	1010, 1020, 1025, 1522, 1144, etc.	180 - 275				
	Medium Carbon Steel	125 - 180				
	1030, 1040, 1050, 1527, 1140, 1151, etc.	180 - 325				
	Alloy Steel	125 - 180				
	4140, 5140, 8640, etc.	180 - 375				
	High Strength Alloy 4340, 4330V, 300M, etc.	240 - 450				
	Structural Steel	125 - 180				
	A36, A285, A516	180 - 350				
	Tool Steel	150 - 200				
	H-13, H-21, A-4, 0-2, S-3, etc.	200 - 250				
S	**High Temp Alloy** Hastelloy B, Inconel 600, etc.	140 - 310	Water Soluble Cutting Oil	.006 - .010	.008 - .016	.012 - .016
	Titanium Alloy	140 - 310				
M	**Stainless Steel 400 Series** 416, 420, etc.	135 - 350	Water Soluble Cutting Oil	.006 - .010	.008 - .016	.012 - .016
	Stainless Steel 300 Series 304, 316, 17-4PH, etc.	135 - 275				
K	**Grey Cast Iron, Ductile Cast Iron,**	< 200	Water Soluble Cutting Oil	.006 - .010	.008 - .016	.012 - .016
	Spheroidal Cast Iron (Pearlitic)	> 200				
	Spheroidal Cast Iron (Ferritic)	260 - 320				
N	**Copper and Alloys Brass**	< 500	Water Soluble	.006 - .010	.008 - .016	.012 - .016
	Bronze Bronze Phosphorous	< 180	Water Soluble Cutting Oil			
	Aluminum and Alloys	< 150	Water Soluble Cutting Oil			

*Stock value is on diameter.

Recommended Cutting Data | Imperial (inch)

Monobloc Style

ISO	Material	Hardness (BHN)	Speed (SFM) Uncoated Carbide	Speed (SFM) Coated Carbide	Speed (SFM) Cermet	Recommended Feed (IPR) by Reamer Diameter .2283 - .3940 Lead A, G	.2283 - .3940 Lead E, N, M	.3941 - .7090 Lead A, G	.3941 - .7090 Lead E, N, M	.7091 - 1.2638 Lead A, G	.7091 - 1.2638 Lead E, N, M
P	**Free Machining Steel**	100 - 180	25 - 50	200 - 260	300 - 980	.008 - .016	.012 - .024	.016 - .024	.016 - .047	.020 - .031	.024 - .047
	1118, 1215, 12L14, etc.	180 - 250	20 - 35	130 - 230	260 - 660	.008 - .016	.012 - .020	.012 - .024	.012 - .031	.016 - .028	.016 - .047
	Low Carbon Steel	85 - 180	25 - 50	200 - 260	300 - 980	.008 - .016	.012 - .024	.016 - .024	.016 - .047	.020 - .031	.024 - .047
	1010, 1020, 1025, 1522, 1144, etc.	180 - 275	20 - 35	130 - 230	260 - 660	.008 - .016	.012 - .020	.012 - .024	.012 - .031	.016 - .028	.016 - .047
	Medium Carbon Steel	125 - 180	25 - 50	200 - 260	300 - 980	.008 - .016	.012 - .024	.016 - .024	.016 - .047	.020 - .031	.024 - .047
	1030, 1040, 1050, 1527, 1140, 1151, etc.	180 - 325	20 - 35	130 - 230	260 - 660	.008 - .016	.012 - .020	.012 - .024	.012 - .031	.016 - .028	.016 - .047
	Alloy Steel	125 - 180	20 - 35	130 - 230	260 - 660	.008 - .016	.012 - .024	.016 - .024	.016 - .047	.020 - .031	.024 - .047
	4140, 5140, 8640, etc.	180 - 375	15 - 25	100 - 160	200 - 490	.008 - .016	.012 - .020	.012 - .024	.012 - .031	.016 - .028	.016 - .047
	High Strength Alloy 4340, 4330V, 300M, etc.	240 - 450	10 - 20	50 - 100	200 - 390	.006 - .012	.008 - .016	.008 - .020	.012 - .024	.012 - .024	.016 - .031
	Structural Steel	125 - 180	25 - 50	200 - 260	300 - 980	.008 - .016	.012 - .024	.016 - .024	.016 - .047	.020 - .031	.024 - .047
	A36, A285, A516	180 - 350	20 - 35	130 - 230	260 - 660	.008 - .016	.012 - .020	.012 - .024	.012 - .031	.016 - .028	.016 - .047
	Tool Steel	150 - 200	25 - 50	200 - 260	300 - 980	.008 - .016	.012 - .024	.016 - .024	.016 - .047	.020 - .031	.024 - .047
	H-13, H-21, A-4, 0-2, S-3, etc.	200 - 250	20 - 35	130 - 230	260 - 660	.008 - .016	.012 - .020	.012 - .024	.012 - .031	.016 - .028	.016 - .047
S	**High Temp Alloy** Hastelloy B, Inconel 600, etc.	140 - 310	15 - 25	60 - 200	–	.006 - .012	–	.008 - .016	–	.012 - .020	–
	Titanium Alloy	140 - 310	15 - 25	60 - 200	–	.006 - .012	–	.008 - .016	–	.012 - .020	–
M	**Stainless Steel 400 Series** 416, 420, etc.	135 - 350	15 - 25	100 - 160	200 - 490	.008 - .016	.012 - .020	.012 - .024	.012 - .031	.016 - .028	.016 - .047
	Stainless Steel 300 Series 304, 316, 17-4PH, etc.	135 - 275	15 - 25	100 - 160	200 - 490	.008 - .016	.012 - .020	.012 - .024	.012 - .031	.016 - .028	.016 - .047
K	**Grey Cast Iron, Ductile Cast Iron,**	< 200	50 - 100	160 - 230	–	.008 - .016	.012 - .024	.014 - .024	.020 - .031	.016 - .047	.024 - .059
	Spheroidal Cast Iron (Pearlitic)	> 200	35 - 65	160 - 230	–	.008 - .016	.012 - .024	.014 - .024	.020 - .031	.016 - .047	.024 - .059
	Spheroidal Cast Iron (Ferritic)	260 - 320	25 - 40	100 - 160	200 - 400	.008 - .016	.012 - .024	.014 - .024	.020 - .031	.016 - .047	.024 - .059
N	**Copper and Alloys Brass**	< 500	35 - 60	330 - 660	–	.008 - .016	–	.016 - .028	–	.020 - .031	–
	Bronze Bronze Phosphorous	< 180	35 - 65	260 - 520	330 - 980	.006 - .012	–	.008 - .016	–	.012 - .024	–
	Aluminum and Alloys	< 150	50 - 100	330 - 660	–	.008 - .016	–	.016 - .028	–	.020 - .031	–

Formulas

1. **RPM = (SFM • 3.82) / DIA**

where:

RPM = revolutions per minute (rev/min)
SFM = speed (ft/min)
DIA = diameter of reamer (inch)

2. **IPM = RPM • IPR**

where:

IPM = inches per minute (in/min)
RPM = revolutions per minute (rev/min)
IPR = feed rate (in/rev)

3. **SFM = RPM • 0.262 • DIA**

where:

SFM = speed (ft/min)
RPM = revolutions per minute (rev/min)
DIA = diameter of reamer (inch)

IMPORTANT: The speeds and feeds listed on these pages are a general starting point for all applications. Factory technical assistance is available through our Application Engineering department.

Stock Allowance and Coolant | Imperial (inch)

Monobloc Style

ISO	Material	Hardness (BHN)	Coolant	Recommended Stock (inch) by Reamer Diameter* .2283 - .3940	.3941 - .7090	.7091 - 1.2638
P	**Free Machining Steel**	100 - 180	Water Soluble Cutting Oil	.006 - .012	.008 - .016	.010 - .020
	1118, 1215, 12L14, etc.	180 - 250				
	Low Carbon Steel	85 - 180				
	1010, 1020, 1025, 1522, 1144, etc.	180 - 275				
	Medium Carbon Steel	125 - 180				
	1030, 1040, 1050, 1527, 1140, 1151, etc.	180 - 325				
	Alloy Steel	125 - 180				
	4140, 5140, 8640, etc.	180 - 375				
	High Strength Alloy 4340, 4330V, 300M, etc.	240 - 450				
	Structural Steel	125 - 180				
	A36, A285, A516	180 - 350				
	Tool Steel	150 - 200				
	H-13, H-21, A-4, 0-2, S-3, etc.	200 - 250				
S	**High Temp Alloy** Hastelloy B, Inconel 600, etc.	140 - 310	Water Soluble Cutting Oil	.008 - .016	.012 - .016	.012 - .020
	Titanium Alloy	140 - 310				
M	**Stainless Steel 400 Series** 416, 420, etc.	135 - 350	Water Soluble Cutting Oil	.006 - .012	.008 - .016	.010 - .020
	Stainless Steel 300 Series 304, 316, 17-4PH, etc.	135 - 275				
K	**Grey Cast Iron, Ductile Cast Iron,**	< 200	Water Soluble Cutting Oil	.006 - .012	.008 - .016	.010 - .020
	Spheroidal Cast Iron (Pearlitic)	> 200				
	Spheroidal Cast Iron (Ferritic)	260 - 320				
N	**Copper and Alloys Brass**	< 500	Water Soluble	.006 - .012	.008 - .016	.010 - .020
	Bronze Bronze Phosphorous	< 180	Water Soluble Cutting Oil			
	Aluminum and Alloys	< 150	Water Soluble Cutting Oil			

*Stock value is on diameter.

Recommended Cutting Data | Imperial (inch)

Cutting Ring Style

ISO	Material	Hardness (BHN)	Speed (SFM) Uncoated Carbide	Speed (SFM) Coated Carbide	Speed (SFM) Cermet	Recommended Feed (IPR) by Reamer Diameter .6929 - 1.5750 Lead A, G	.6929 - 1.5750 Lead E, N, M	1.5751 - 3.1500 Lead A, G	1.5751 - 3.1500 Lead E, N, M	3.1501 - 7.8972 Lead A, G	3.1501 - 7.8972 Lead E, N, M
P	**Free Machining Steel**	100 - 180	25 - 50	200 - 260	300 - 980	.020 - .031	.024 - .047	.020 - .039	.031 - .063	.031 - .059	.039 - .087
	1118, 1215, 12L14, etc.	180 - 250	20 - 35	130 - 230	260 - 660	.016 - .028	.016 - .039	.020 - .031	.024 - .055	.031 - .047	.039 - .079
	Low Carbon Steel	85 - 180	25 - 50	200 - 260	300 - 980	.020 - .031	.024 - .047	.020 - .039	.031 - .063	.031 - .059	.039 - .087
	1010, 1020, 1025, 1522, 1144, etc.	180 - 275	20 - 35	130 - 230	260 - 660	.016 - .028	.016 - .039	.020 - .031	.024 - .055	.031 - .047	.039 - .079
	Medium Carbon Steel	125 - 180	25 - 50	200 - 260	300 - 980	.020 - .031	.024 - .047	.020 - .039	.031 - .063	.031 - .059	.039 - .087
	1030, 1040, 1050, 1527, 1140, 1151, etc.	180 - 325	20 - 35	130 - 230	260 - 660	.016 - .028	.016 - .039	.020 - .031	.024 - .055	.031 - .047	.039 - .079
	Alloy Steel	125 - 180	20 - 35	130 - 230	260 - 660	.020 - .031	.024 - .047	.020 - .039	.031 - .063	.031 - .059	.039 - .087
	4140, 5140, 8640, etc.	180 - 375	15 - 25	100 - 160	200 - 490	.016 - .028	.016 - .039	.020 - .031	.024 - .055	.031 - .047	.039 - .079
	High Strength Alloy 4340, 4330V, 300M, etc.	240 - 450	10 - 20	50 - 100	200 - 390	.012 - .024	.016 - .031	.016 - .031	.020 - .039	.024 - .039	.028 - .055
	Structural Steel	125 - 180	25 - 50	200 - 260	300 - 980	.020 - .031	.024 - .047	.020 - .039	.031 - .063	.031 - .059	.039 - .087
	A36, A285, A516	180 - 350	20 - 35	130 - 230	260 - 660	.016 - .028	.016 - .039	.020 - .031	.024 - .055	.031 - .047	.039 - .079
	Tool Steel	150 - 200	25 - 50	200 - 260	300 - 980	.020 - .031	.024 - .047	.020 - .039	.031 - .063	.031 - .059	.039 - .087
	H-13, H-21, A-4, 0-2, S-3, etc.	200 - 250	20 - 35	130 - 230	260 - 660	.016 - .028	.016 - .039	.020 - .031	.024 - .055	.031 - .047	.039 - .079
S	**High Temp Alloy** Hastelloy B, Inconel 600, etc.	140 - 310	15 - 25	60 - 200	–	.012 - .020	–	.016 - .024	–	.020 - .028	–
	Titanium Alloy	140 - 310	15 - 25	60 - 200	–	.012 - .020	–	.016 - .024	–	.020 - .028	–
M	**Stainless Steel 400 Series** 416, 420, etc.	135 - 350	15 - 25	100 - 160	200 - 490	.016 - .028	.016 - .039	.020 - .031	.024 - .055	.031 - .047	.039 - .079
	Stainless Steel 300 Series 304, 316, 17-4PH, etc.	135 - 275	15 - 25	100 - 160	200 - 490	.016 - .028	.016 - .039	.020 - .031	.024 - .055	.031 - .047	.039 - .079
K	**Grey Cast Iron, Ductile Cast Iron,**	< 200	50 - 100	160 - 230	–	.016 - .039	.024 - .059	.024 - .051	.031 - .063	.031 - .067	.039 - .088
	Spheroidal Cast Iron (Pearlitic)	> 200	35 - 65	160 - 230	–	.016 - .039	.024 - .059	.024 - .051	.031 - .063	.031 - .067	.039 - .088
	Spheroidal Cast Iron (Ferritic)	260 - 320	25 - 40	100 - 160	200 - 400	.016 - .039	.024 - .059	.024 - .051	.031 - .063	.031 - .067	.039 - .088
N	**Copper and Alloys Brass**	< 500	35 - 60	330 - 660	–	.020 - .031	–	.024 - .039	–	.031 - .055	–
	Bronze Bronze Phosphorous	< 180	35 - 65	260 - 520	330 - 980	.012 - .024	–	.016 - .031	–	.024 - .039	–
	Aluminum and Alloys	< 150	50 - 100	330 - 660	–	.020 - .031	–	.024 - .039	–	.031 - .055	–

Formulas

1. **RPM = (SFM • 3.82) / DIA**

where:

RPM = revolutions per minute (rev/min)
SFM = speed (ft/min)
DIA = diameter of reamer (inch)

2. **IPM = RPM • IPR**

where:

IPM = inches per minute (in/min)
RPM = revolutions per minute (rev/min)
IPR = feed rate (in/rev)

3. **SFM = RPM • 0.262 • DIA**

where:

SFM = speed (ft/min)
RPM = revolutions per minute (rev/min)
DIA = diameter of reamer (inch)

IMPORTANT: The speeds and feeds listed on these pages are a general starting point for all applications. Factory technical assistance is available through our Application Engineering department.

Stock Allowance and Coolant | Imperial (inch)

Cutting Ring Style

ISO	Material	Hardness (BHN)	Coolant	Recommended Stock (inch) by Reamer Diameter* .6929 - 1.5750	1.5751 - 3.1500	3.1501 - 7.8972
P	**Free Machining Steel**	100 - 180	Water Soluble Cutting Oil	.006 - .012	.008 - .016	.010 - .020
	1118, 1215, 12L14, etc.	180 - 250				
	Low Carbon Steel	85 - 180				
	1010, 1020, 1025, 1522, 1144, etc.	180 - 275				
	Medium Carbon Steel	125 - 180				
	1030, 1040, 1050, 1527, 1140, 1151, etc.	180 - 325				
	Alloy Steel	125 - 180				
	4140, 5140, 8640, etc.	180 - 375				
	High Strength Alloy 4340, 4330V, 300M, etc.	240 - 450				
	Structural Steel	125 - 180				
	A36, A285, A516	180 - 350				
	Tool Steel	150 - 200				
	H-13, H-21, A-4, 0-2, S-3, etc.	200 - 250				
S	**High Temp Alloy** Hastelloy B, Inconel 600, etc.	140 - 310	Water Soluble Cutting Oil	.008 - .016	.012 - .016	.012 - .020
	Titanium Alloy	140 - 310				
M	**Stainless Steel 400 Series** 416, 420, etc.	135 - 350	Water Soluble Cutting Oil	.006 - .012	.008 - .016	.010 - .020
	Stainless Steel 300 Series 304, 316, 17-4PH, etc.	135 - 275				
K	**Grey Cast Iron, Ductile Cast Iron,**	< 200	Water Soluble Cutting Oil	.006 - .012	.008 - .016	.010 - .020
	Spheroidal Cast Iron (Pearlitic)	> 200				
	Spheroidal Cast Iron (Ferritic)	260 - 320				
N	**Copper and Alloys Brass**	< 500	Water Soluble	.006 - .012	.008 - .016	.010 - .020
	Bronze Bronze Phosphorous	< 180	Water Soluble Cutting Oil			
	Aluminum and Alloys	< 150	Water Soluble Cutting Oil			

*Stock value is on diameter.

Recommended Cutting Data | Metric (mm)

Replaceable Head Style

ISO	Material	Hardness (BHN)	Speed (M/min) Uncoated Carbide	Speed (M/min) Coated Carbide	Speed (M/min) Cermet	Recommended Feed (mm/rev) by Reamer Diameter 11.80 - 21.60 Lead A, G	11.80 - 21.60 Lead E, N, M	21.61 - 39.60 Lead A, G	21.61 - 39.60 Lead E, N, M	39.61 - 60.60 Lead A, G	39.61 - 60.60 Lead E, N, M
P	**Free Machining Steel**	100 - 180	10 - 20	60 - 80	90 - 300	.25 - .60	.50 - .60	.30 - .80	.60 - 1.20	.60 - 1.00	.70 - 1.50
	1118, 1215, 12L14, etc.	180 - 250	7 - 15	40 - 70	80 - 200	.30 - .60	.40 - .80	.40 - .80	.50 - 1.00	.50 - .90	.60 - 1.20
	Low Carbon Steel	85 - 180	10 - 20	60 - 80	90 - 300	.25 - .60	.50 - .60	.30 - .80	.60 - 1.20	.60 - 1.00	.70 - 1.50
	1010, 1020, 1025, 1522, 1144, etc.	180 - 275	7 - 15	40 - 70	80 - 200	.30 - .60	.40 - .80	.40 - .80	.50 - 1.00	.50 - .90	.60 - 1.20
	Medium Carbon Steel	125 - 180	10 - 20	60 - 80	90 - 300	.25 - .60	.50 - .60	.30 - .80	.60 - 1.20	.60 - 1.00	.70 - 1.50
	1030, 1040, 1050, 1527, 1140, 1151, etc.	180 - 325	7 - 15	40 - 70	80 - 200	.30 - .60	.40 - .80	.40 - .80	.50 - 1.00	.50 - .90	.60 - 1.20
	Alloy Steel	125 - 180	6 - 10	40 - 70	80 - 200	.25 - .60	.50 - .60	.30 - .80	.60 - 1.20	.60 - 1.00	.70 - 1.50
	4140, 5140, 8640, etc.	180 - 375	4 - 8	30 - 50	60 - 150	.30 - .60	.40 - .80	.40 - .80	.50 - 1.00	.50 - .90	.60 - 1.20
	High Strength Alloy 4340, 4330V, 300M, etc.	240 - 450	3 - 6	15 - 30	60 - 120	.25 - .50	.30 - .60	.30 - .60	.40 - .80	.40 - .70	.50 - 1.00
	Structural Steel	125 - 180	10 - 20	60 - 80	90 - 300	.25 - .60	.50 - .60	.30 - .80	.60 - 1.20	.60 - 1.00	.70 - 1.50
	A36, A285, A516	180 - 350	7 - 15	40 - 70	80 - 200	.30 - .60	.40 - .80	.40 - .80	.50 - 1.00	.50 - .90	.60 - 1.20
	Tool Steel	150 - 200	10 - 20	60 - 80	90 - 300	.25 - .60	.50 - .60	.30 - .80	.60 - 1.20	.60 - 1.00	.70 - 1.50
	H-13, H-21, A-4, 0-2, S-3, etc.	200 - 250	7 - 15	40 - 70	80 - 200	.30 - .60	.40 - .80	.40 - .80	.50 - 1.00	.50 - .90	.60 - 1.20
S	**High Temp Alloy** Hastelloy B, Inconel 600, etc.	140 - 310	4 - 10	30 - 50	–	.20 - .40	–	.30 - .50	–	.40 - .60	–
	Titanium Alloy	140 - 310	4 - 15	30 - 50	–	.20 - .40	–	.30 - .50	–	.40 - .60	–
M	**Stainless Steel 400 Series** 416, 420, etc.	135 - 350	4 - 10	30 - 50	60 - 150	.30 - .60	.40 - .80	.40 - .80	.50 - 1.00	.50 - .90	.60 - 1.20
	Stainless Steel 300 Series 304, 316, 17-4PH, etc.	135 - 275	4 - 10	30 - 50	60 - 150	.30 - .60	.40 - .80	.40 - .80	.50 - 1.00	.50 - .90	.60 - 1.20
K	**Grey Cast Iron, Ductile Cast Iron,**	< 200	20 - 40	50 - 70	–	.20 - .60	.50 - 1.00	.30 - .70	.60 - 1.20	.60 - 1.30	.80 - 1.60
	Spheroidal Cast Iron (Pearlitic)	> 200	15 - 30	50 - 70	–	.20 - .60	.50 - 1.00	.30 - .70	.60 - 1.20	.60 - 1.30	.80 - 1.60
	Spheroidal Cast Iron (Ferritic)	260 - 320	10 - 15	30 - 50	60 - 120	.20 - .60	.50 - .60	.30 - .70	.60 - 1.20	.40 - .80	.80 - 1.60
N	**Copper and Alloys Brass**	< 500	60 - 200	100 - 200	–	.20 - .60	–	.30 - .70	–	.40 - .80	–
	Bronze Bronze Phosphorous	< 180	20 - 40	80 - 160	100 - 300	.30 - .60	.40 - 1.00	.30 - .60	.50 - 1.20	.30 - .60	.60 - 1.50
	Aluminum and Alloys	< 150	20 - 200	–	–	.30 - .60	–	.40 - 1.00	–	.40 - 1.00	–

Formulas

1. **RPM = M/min • 3.82 • DIA**
   where:
   RPM = revolutions per minute (rev/min)
   M/min = speed (M/min)
   DIA = diameter of reamer (mm)

2. **mm/min = RPM • mm/rev**
   where:
   mm/min = mm per minute (mm/min)
   RPM = revolutions per minute (rev/min)
   mm/rev = feed rate (mm/rev)

3. **M/min = RPM • 0.003 • DIA**
   where:
   M/min = speed (M/min)
   RPM = revolutions per minute (rev/min)
   DIA = diameter of reamer (mm)

IMPORTANT: The speeds and feeds listed on these pages are a general starting point for all applications. Factory technical assistance is available through our Application Engineering department.

Stock Allowance and Coolant | Metric (mm)

Replaceable Head Style

ISO	Material	Hardness (BHN)	Coolant	Recommended Stock (mm) by Reamer Diameter* 11.80 - 21.60	21.61 - 39.60	39.61 - 60.60
P	**Free Machining Steel**	100 - 180	Water Soluble Cutting Oil	0.15 - 0.25	0.20 - 0.40	0.30 - 0.40
	1118, 1215, 12L14, etc.	180 - 250				
	Low Carbon Steel	85 - 180				
	1010, 1020, 1025, 1522, 1144, etc.	180 - 275				
	Medium Carbon Steel	125 - 180				
	1030, 1040, 1050, 1527, 1140, 1151, etc.	180 - 325				
	Alloy Steel	125 - 180				
	4140, 5140, 8640, etc.	180 - 375				
	High Strength Alloy 4340, 4330V, 300M, etc.	240 - 450				
	Structural Steel	125 - 180				
	A36, A285, A516	180 - 350				
	Tool Steel	150 - 200				
	H-13, H-21, A-4, 0-2, S-3, etc.	200 - 250				
S	**High Temp Alloy** Hastelloy B, Inconel 600, etc.	140 - 310	Water Soluble Cutting Oil	0.15 - 0.25	0.20 - 0.40	0.30 - 0.40
	Titanium Alloy	140 - 310				
M	**Stainless Steel 400 Series** 416, 420, etc.	135 - 350	Water Soluble Cutting Oil	0.15 - 0.25	0.20 - 0.40	0.30 - 0.40
	Stainless Steel 300 Series 304, 316, 17-4PH, etc.	135 - 275				
K	**Grey Cast Iron, Ductile Cast Iron,**	< 200	Water Soluble Cutting Oil	0.15 - 0.25	0.20 - 0.40	0.30 - 0.40
	Spheroidal Cast Iron (Pearlitic)	> 200				
	Spheroidal Cast Iron (Ferritic)	260 - 320				
N	**Copper and Alloys Brass**	< 500	Water Soluble	0.15 - 0.25	0.20 - 0.40	0.30 - 0.40
	Bronze Bronze Phosphorous	< 180	Water Soluble Cutting Oil			
	Aluminum and Alloys	< 150	Water Soluble Cutting Oil			

*Stock value is on diameter.

Recommended Cutting Data | Metric (mm)

Monobloc Style

ISO	Material	Hardness (BHN)	Speed (M/min) Uncoated Carbide	Speed (M/min) Coated Carbide	Speed (M/min) Cermet	Recommended Feed (mm/rev) by Reamer Diameter 5.80 - 10.00 Lead A, G	5.80 - 10.00 Lead E, N, M	10.01 - 22.00 Lead A, G	10.01 - 22.00 Lead E, N, M	22.01 - 32.10 Lead A, G	22.01 - 32.10 Lead E, N, M
P	**Free Machining Steel**	100 - 180	7 - 15	60 - 80	90 - 300	.20 - .40	.30 - .60	.40 - .60	.40 - 1.00	.50 - .80	.60 - 1.20
	1118, 1215, 12L14, etc.	180 - 250	6 - 10	40 - 70	80 - 200	.20 - .40	.30 - .50	.30 - .60	.30 - .80	.40 - .70	.40 - 1.00
	Low Carbon Steel	85 - 180	7 - 15	60 - 80	90 - 300	.20 - .40	.30 - .60	.40 - .60	.40 - 1.00	.50 - .80	.60 - 1.20
	1010, 1020, 1025, 1522, 1144, etc.	180 - 275	6 - 10	40 - 70	80 - 200	.20 - .40	.30 - .50	.30 - .60	.30 - .80	.40 - .70	.40 - 1.00
	Medium Carbon Steel	125 - 180	7 - 15	60 - 80	90 - 300	.20 - .40	.30 - .60	.40 - .60	.40 - 1.00	.50 - .80	.60 - 1.20
	1030, 1040, 1050, 1527, 1140, 1151, etc.	180 - 325	6 - 10	40 - 70	80 - 200	.20 - .40	.30 - .50	.30 - .60	.30 - .80	.40 - .70	.40 - 1.00
	Alloy Steel	125 - 180	6 - 10	40 - 70	80 - 200	.20 - .40	.30 - .60	.40 - .60	.40 - 1.00	.50 - .80	.60 - 1.20
	4140, 5140, 8640, etc.	180 - 375	4 - 8	30 - 50	60 - 150	.20 - .40	.30 - .50	.30 - .60	.30 - .80	.40 - .70	.40 - 1.00
	High Strength Alloy 4340, 4330V, 300M, etc.	240 - 450	3 - 6	15 - 30	60 - 120	.15 - .30	.20 - .40	.20 - .50	.30 - .60	.30 - .60	.40 - .80
	Structural Steel	125 - 180	7 - 15	60 - 80	90 - 300	.20 - .40	.30 - .60	.40 - .60	.40 - 1.00	.50 - .80	.60 - 1.20
	A36, A285, A516	180 - 350	6 - 10	40 - 70	80 - 200	.20 - .40	.30 - .50	.30 - .60	.30 - .80	.40 - .70	.40 - 1.00
	Tool Steel	150 - 200	7 - 15	60 - 80	90 - 300	.20 - .40	.30 - .60	.40 - .60	.40 - 1.00	.50 - .80	.60 - 1.20
	H-13, H-21, A-4, 0-2, S-3, etc.	200 - 250	6 - 10	40 - 70	80 - 200	.20 - .40	.30 - .50	.30 - .60	.30 - .80	.40 - .70	.40 - 1.00
S	**High Temp Alloy** Hastelloy B, Inconel 600, etc.	140 - 310	4 - 10	30 - 50	–	.15 - .30	–	.20 - .40	–	.30 - .50	–
	Titanium Alloy	140 - 310	4 - 15	30 - 50	–	.15 - .30	–	.20 - .40	–	.30 - .50	–
M	**Stainless Steel 400 Series** 416, 420, etc.	135 - 350	4 - 10	30 - 50	60 - 150	.20 - .40	.30 - .50	.30 - .60	.30 - .80	.40 - .70	.40 - 1.00
	Stainless Steel 300 Series 304, 316, 17-4PH, etc.	135 - 275	4 - 10	30 - 50	60 - 150	.20 - .40	.30 - .50	.30 - .60	.30 - .80	.40 - .70	.40 - 1.00
K	**Grey Cast Iron, Ductile Cast Iron,**	< 200	15 - 30	50 - 70	–	.20 - .40	.30 - .60	.35 - .60	.50 - .80	.40 - 1.00	.60 - 1.50
	Spheroidal Cast Iron (Pearlitic)	> 200	10 - 20	50 - 70	–	.20 - .40	.30 - .60	.35 - .60	.50 - .80	.40 - 1.00	.60 - 1.50
	Spheroidal Cast Iron (Ferritic)	260 - 320	8 - 12	30 - 50	60 - 120	.20 - .40	.30 - .60	.35 - .60	.50 - .80	.40 - 1.00	.60 - 1.50
N	**Copper and Alloys Brass**	< 500	10 - 18	100 - 200	–	.20 - .40	–	.40 - .70	–	.50 - .80	–
	Bronze Bronze Phosphorous	< 180	10 - 20	80 - 160	100 - 300	.15 - .30	–	.20 - .40	–	.30 - .60	–
	Aluminum and Alloys	< 150	15 - 30	100 - 200	–	.20 - .40	–	.40 - .70	–	.50 - .80	–

Formulas

1. **RPM = M/min • 3.82 • DIA**
   where:
   RPM = revolutions per minute (rev/min)
   M/min = speed (M/min)
   DIA = diameter of reamer (mm)

2. **mm/min = RPM • mm/rev**
   where:
   mm/min = mm per minute (mm/min)
   RPM = revolutions per minute (rev/min)
   mm/rev = feed rate (mm/rev)

3. **M/min = RPM • 0.003 • DIA**
   where:
   M/min = speed (M/min)
   RPM = revolutions per minute (rev/min)
   DIA = diameter of reamer (mm)

IMPORTANT: The speeds and feeds listed on these pages are a general starting point for all applications. Factory technical assistance is available through our Application Engineering department.

Stock Allowance and Coolant | Metric (mm)

Monobloc Style

ISO	Material	Hardness (BHN)	Coolant	Recommended Stock (mm) by Reamer Diameter* 5.80 - 10.00	10.01 - 22.00	22.01 - 32.10
P	**Free Machining Steel**	100 - 180	Water Soluble Cutting Oil	0.08 - 0.15	0.15 - 0.25	0.15 - 0.30
	1118, 1215, 12L14, etc.	180 - 250				
	Low Carbon Steel	85 - 180				
	1010, 1020, 1025, 1522, 1144, etc.	180 - 275				
	Medium Carbon Steel	125 - 180				
	1030, 1040, 1050, 1527, 1140, 1151, etc.	180 - 325				
	Alloy Steel	125 - 180				
	4140, 5140, 8640, etc.	180 - 375				
	High Strength Alloy 4340, 4330V, 300M, etc.	240 - 450				
	Structural Steel	125 - 180				
	A36, A285, A516	180 - 350				
	Tool Steel	150 - 200				
	H-13, H-21, A-4, 0-2, S-3, etc.	200 - 250				
S	**High Temp Alloy** Hastelloy B, Inconel 600, etc.	140 - 310	Water Soluble Cutting Oil	0.10 - 0.20	0.15 - 0.25	0.20 - 0.40
	Titanium Alloy	140 - 310				
M	**Stainless Steel 400 Series** 416, 420, etc.	135 - 350	Water Soluble Cutting Oil	0.08 - 0.15	0.15 - 0.25	0.15 - 0.30
	Stainless Steel 300 Series 304, 316, 17-4PH, etc.	135 - 275				
K	**Grey Cast Iron, Ductile Cast Iron,**	< 200	Water Soluble Cutting Oil	0.08 - 0.15	0.15 - 0.25	0.15 - 0.30
	Spheroidal Cast Iron (Pearlitic)	> 200				
	Spheroidal Cast Iron (Ferritic)	260 - 320				
N	**Copper and Alloys Brass**	< 500	Water Soluble	0.08 - 0.15	0.15 - 0.25	0.15 - 0.30
	Bronze Bronze Phosphorous	< 180	Water Soluble Cutting Oil			
	Aluminum and Alloys	< 150	Water Soluble Cutting Oil			

*Stock value is on diameter.

Recommended Cutting Data | Metric (mm)

Cutting Ring Style

ISO	Material	Hardness (BHN)	Speed (M/min) Uncoated Carbide	Speed (M/min) Coated Carbide	Speed (M/min) Cermet	Recommended Feed (mm/rev) by Reamer Diameter 17.60 - 40.00 Lead A, G	17.60 - 40.00 Lead E, N, M	40.01 - 80.00 Lead A, G	40.01 - 80.00 Lead E, N, M	80.01 - 200.00 Lead A, G	80.01 - 200.00 Lead E, N, M
P	**Free Machining Steel**	100 - 180	7 - 15	60 - 80	90 - 300	.50 - .80	.60 - 1.20	.50 - 1.00	.80 - 1.60	.80 - 1.50	1.00 - 2.20
	1118, 1215, 12L14, etc.	180 - 250	6 - 10	40 - 70	80 - 200	.40 - .70	.40 - 1.00	.50 - .80	.60 - 1.40	.80 - 1.20	1.00 - 2.00
	Low Carbon Steel	85 - 180	7 - 15	60 - 80	90 - 300	.50 - .80	.60 - 1.20	.50 - 1.00	.80 - 1.60	.80 - 1.50	1.00 - 2.20
	1010, 1020, 1025, 1522, 1144, etc.	180 - 275	6 - 10	40 - 70	80 - 200	.40 - .70	.40 - 1.00	.50 - .80	.60 - 1.40	.80 - 1.20	1.00 - 2.00
	Medium Carbon Steel	125 - 180	7 - 15	60 - 80	90 - 300	.50 - .80	.60 - 1.20	.50 - 1.00	.80 - 1.60	.80 - 1.50	1.00 - 2.20
	1030, 1040, 1050, 1527, 1140, 1151, etc.	180 - 325	6 - 10	40 - 70	80 - 200	.40 - .70	.40 - 1.00	.50 - .80	.60 - 1.40	.80 - 1.20	1.00 - 2.00
	Alloy Steel	125 - 180	6 - 10	40 - 70	80 - 200	.50 - .80	.60 - 1.20	.50 - 1.00	.80 - 1.60	.80 - 1.50	1.00 - 2.20
	4140, 5140, 8640, etc.	180 - 375	4 - 8	30 - 50	60 - 150	.40 - .70	.40 - 1.00	.50 - .80	.60 - 1.40	.80 - 1.20	1.00 - 2.00
	High Strength Alloy 4340, 4330V, 300M, etc.	240 - 450	3 - 6	15 - 30	60 - 120	.30 - .60	.40 - .80	.40 - .80	.50 - 1.00	.60 - 1.00	.70 - 1.40
	Structural Steel	125 - 180	7 - 15	60 - 80	90 - 300	.50 - .80	.60 - 1.20	.50 - 1.00	.80 - 1.60	.80 - 1.50	1.00 - 2.20
	A36, A285, A516	180 - 350	6 - 10	40 - 70	80 - 200	.40 - .70	.40 - 1.00	.50 - .80	.60 - 1.40	.80 - 1.20	1.00 - 2.00
	Tool Steel	150 - 200	7 - 15	60 - 80	90 - 300	.50 - .80	.60 - 1.20	.50 - 1.00	.80 - 1.60	.80 - 1.50	1.00 - 2.20
	H-13, H-21, A-4, 0-2, S-3, etc.	200 - 250	6 - 10	40 - 70	80 - 200	.40 - .70	.40 - 1.00	.50 - .80	.60 - 1.40	.80 - 1.20	1.00 - 2.00
S	**High Temp Alloy** Hastelloy B, Inconel 600, etc.	140 - 310	4 - 8	30 - 50	–	.30 - .50	–	.40 - .60	–	.50 - .70	–
	Titanium Alloy	140 - 310	4 - 8	30 - 50	–	.30 - .50	–	.40 - .60	–	.50 - .70	–
M	**Stainless Steel 400 Series** 416, 420, etc.	135 - 350	4 - 8	30 - 50	60 - 150	.40 - .70	.40 - 1.00	.50 - .80	.60 - 1.40	.80 - 1.20	1.00 - 2.00
	Stainless Steel 300 Series 304, 316, 17-4PH, etc.	135 - 275	4 - 8	30 - 50	60 - 150	.40 - .70	.40 - 1.00	.50 - .80	.60 - 1.40	.80 - 1.20	1.00 - 2.00
K	**Grey Cast Iron, Ductile Cast Iron,**	< 200	15 - 30	50 - 70	–	.40 - 1.00	.60 - 1.50	.60 - 1.30	.80 - 1.60	.80 - 1.70	1.00 - 2.25
	Spheroidal Cast Iron (Pearlitic)	> 200	10 - 20	50 - 70	–	.40 - 1.00	.60 - 1.50	.60 - 1.30	.80 - 1.60	.80 - 1.70	1.00 - 2.25
	Spheroidal Cast Iron (Ferritic)	260 - 320	8 - 12	30 - 50	60 - 120	.40 - 1.00	.60 - 1.50	.60 - 1.30	.80 - 1.60	.80 - 1.70	1.00 - 2.25
N	**Copper and Alloys Brass**	< 500	10 - 18	100 - 200	–	.50 - .80	–	.60 - 1.00	–	.80 - 1.40	–
	Bronze Bronze Phosphorous	< 180	10 - 20	80 - 160	100 - 300	.30 - .60	–	.40 - .80	–	.60 - 1.00	–
	Aluminum and Alloys	< 150	15 - 30	100 - 200	–	.50 - .80	–	.60 - 1.00	–	.80 - 1.40	–

Formulas

1. **RPM = M/min • 3.82 • DIA**
   where:
   RPM = revolutions per minute (rev/min)
   M/min = speed (M/min)
   DIA = diameter of reamer (mm)

2. **mm/min = RPM • mm/rev**
   where:
   mm/min = mm per minute (mm/min)
   RPM = revolutions per minute (rev/min)
   mm/rev = feed rate (mm/rev)

3. **M/min = RPM • 0.003 • DIA**
   where:
   M/min = speed (M/min)
   RPM = revolutions per minute (rev/min)
   DIA = diameter of reamer (mm)

IMPORTANT: The speeds and feeds listed on these pages are a general starting point for all applications. Factory technical assistance is available through our Application Engineering department.

Stock Allowance and Coolant | Metric (mm)

Cutting Ring Style

ISO	Material	Hardness (BHN)	Coolant	Recommended Stock (mm) by Reamer Diameter* 17.60 - 40.00	40.01 - 80.00	80.01 - 200.00
P	**Free Machining Steel**	100 - 180	Water Soluble Cutting Oil	0.15 - 0.30	0.20 - 0.40	0.25 - 0.50
	1118, 1215, 12L14, etc.	180 - 250				
	Low Carbon Steel	85 - 180				
	1010, 1020, 1025, 1522, 1144, etc.	180 - 275				
	Medium Carbon Steel	125 - 180				
	1030, 1040, 1050, 1527, 1140, 1151, etc.	180 - 325				
	Alloy Steel	125 - 180				
	4140, 5140, 8640, etc.	180 - 375				
	High Strength Alloy 4340, 4330V, 300M, etc.	240 - 450				
	Structural Steel	125 - 180				
	A36, A285, A516	180 - 350				
	Tool Steel	150 - 200				
	H-13, H-21, A-4, 0-2, S-3, etc.	200 - 250				
S	**High Temp Alloy** Hastelloy B, Inconel 600, etc.	140 - 310	Water Soluble Cutting Oil	0.20 - 0.40	0.30 - 0.40	0.30 - 0.50
	Titanium Alloy	140 - 310				
M	**Stainless Steel 400 Series** 416, 420, etc.	135 - 350	Water Soluble Cutting Oil	0.15 - 0.30	0.20 - 0.40	0.25 - 0.50
	Stainless Steel 300 Series 304, 316, 17-4PH, etc.	135 - 275				
K	**Grey Cast Iron, Ductile Cast Iron,**	< 200	Water Soluble Cutting Oil	0.15 - 0.30	0.20 - 0.40	0.25 - 0.50
	Spheroidal Cast Iron (Pearlitic)	> 200				
	Spheroidal Cast Iron (Ferritic)	260 - 320				
N	**Copper and Alloys Brass**	< 500	Water Soluble	0.15 - 0.30	0.20 - 0.40	0.25 - 0.50
	Bronze Bronze Phosphorous	< 180	Water Soluble Cutting Oil			
	Aluminum and Alloys	< 150	Water Soluble Cutting Oil			

*Stock value is on diameter.

Set-up Information

Replaceable Head Style

Fixed Head Style

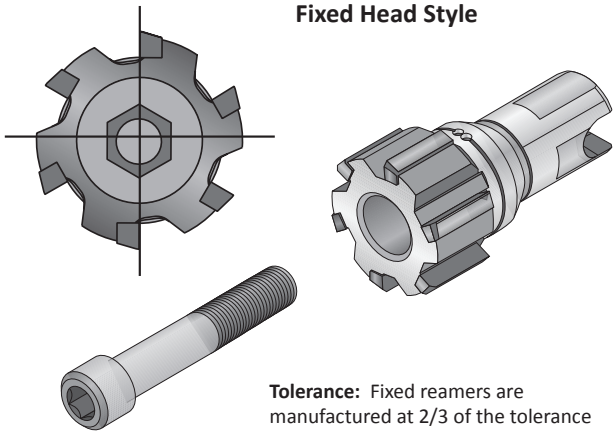

Tolerance: Fixed reamers are manufactured at 2/3 of the tolerance

Recommended Tightening Torque for Fixed Head Reamer (7400 / 7700)

Imperial		Metric	
D_1 Range (inch)	Torque (in-lbs)	D_1 Range (mm)	Torque (N-m)
0.465 - 0.575	22.1	11.80 - 14.60	2.5
0.575 - 0.693	33.6	14.61 - 17.60	3.5
0.693 - 0.850	44.3	17.61 - 21.60	5.0
0.851 - 1.047	62.0	21.61 - 26.60	7.0
1.048 - 1.283	88.5	26.61 - 32.60	10.0
1.284 - 1.598	106.2	32.61 - 40.60	12.0
1.599 - 1.992	141.6	40.61 - 50.60	16.0
1.993 - 2.386	177.0	50.61 - 60.60	20.0

Expandable Head Style

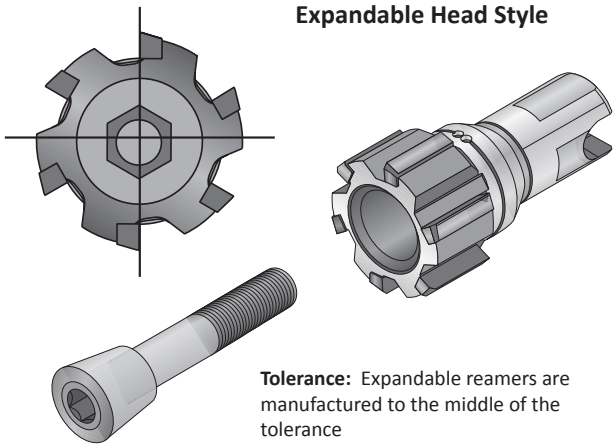

Tolerance: Expandable reamers are manufactured to the middle of the tolerance

Expanding Heads Adjustment

When the size reaches its lower tolerance, the head can be adjusted to compensate for wear to the cutting edges. This operation can be repeated several times until the surface finish of the hole deteriorates to an unacceptable level.

Adjustment Procedure

Slowly turn the right hand threaded screw clockwise while checking the diameter setting of the reamer with a micrometer. When the required diameter is achieved, the tool is ready for use.

Replaceable Head Reamer Assembly

Fixed and Expandable Styles

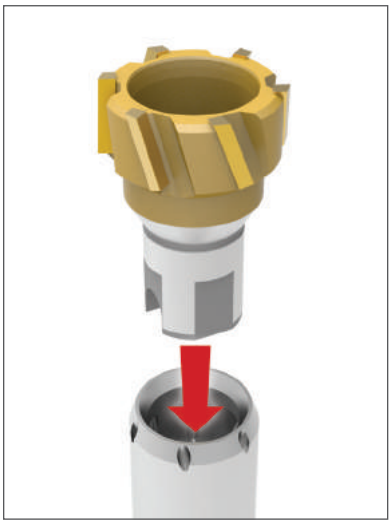

Step 1:
Insert the replaceable reamer head into the mandrel.

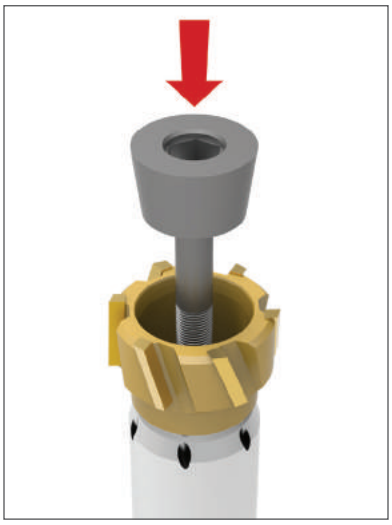

Step 2:
Insert the screw into the reamer head opening to secure it to the mandrel.

Step 3:
Tighten the screw.

NOTE: We recommend lubricating the thread and the conical surface of contact between the reamer head and the screw with antifriction Molycote grease.

Set-up Information

Monobloc Style

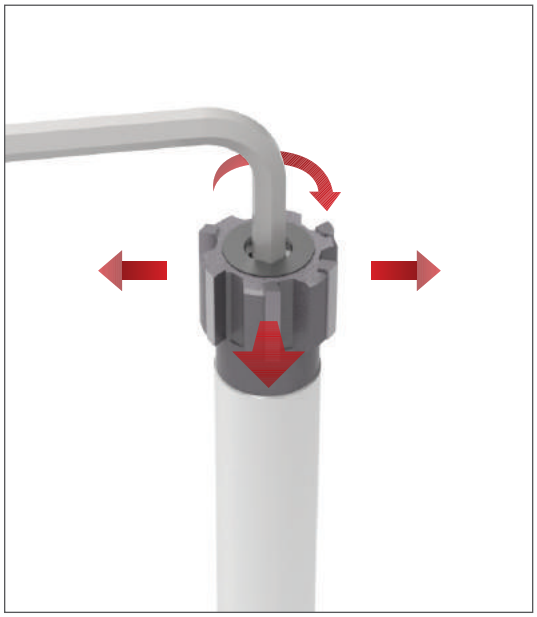

Tolerance

All monobloc reamers are ground to the requested diameter and set in the middle of the hole tolerance, ready for use.

Adjustment

The adjustment must be made to compensate for wear to the cutting edges when the size reaches its lower tolerance. This operation can be repeated several times until the surface finish of the hole deteriorates to an unacceptable level. Then the reamer must be reground. The maximum expansion is about 1% of the diameter.

Set-up Information

Cutting Ring Style

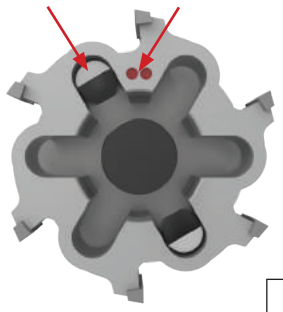

Step 1:
With the drive pins assembled, insert the cutting ring onto the mandrel. Make sure the dimples are at the 12:00 position with the drive pin at the 11:00 position.

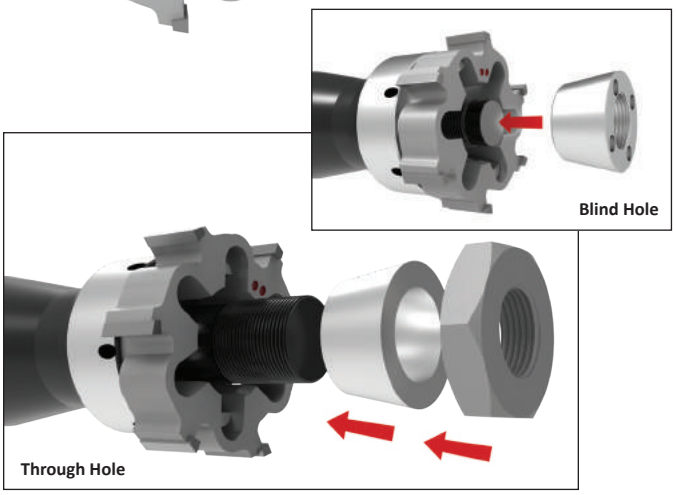

Step 2:

Insert the conical ring. Tighten the lock nut to set the desired reamer size (left hand thread). Then loosen the lock nut slightly until it "clicks" against the drive wall.

NOTE: We recommend lubricating the thread and the conical surface of contact between the cutting ring and the conical ring with antifriction Molycote grease.

Adjustment Procedure

1. Turn the conical ring slowly using an adjustment key (left hand thread). Adjustment keys are supplied with reamers from diameter 17.60mm to 40.59mm.
2. Check the diameter setting of the cutting ring with a micrometer.
3. When the required diameter is achieved, unscrew the conical ring until there is a click and the drive pins are in traction in the opposite direction to the cutting action of the reamer. The reamer is ready for use.

For Diameter Range: 100.60mm - 200.59mm

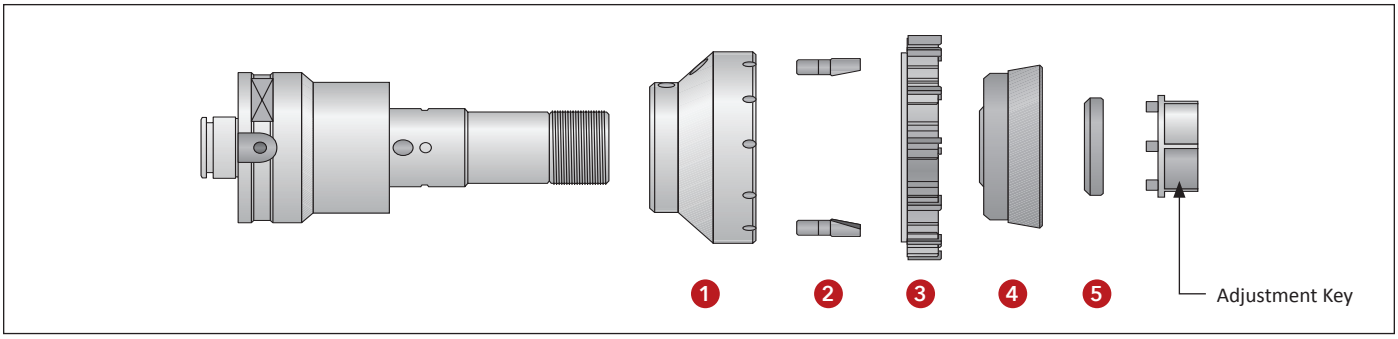

Assembly

1. With the drive pins (2) assembled, mount the flange (1) onto the mandrel. Assemble the cutting ring (3) so the slot on the left side of the dimple is mounted onto the drive pins (2). Insert the conical ring (4).
2. Screw the ring nut (5) onto the mandrel and tighten manually so the conical ring (4) makes contact with the cutting ring (3). The thread is left handed.

   NOTE: We recommend lubricating the thread and the conical surface of contact between the cutting ring and the conical ring with antifriction Molycote grease.

Adjustment Procedure

1. Turn the ring nut (5) slowly using a pin spanner.
2. Check the diameter setting of the cutting ring with a micrometer. Make sure the drive pins (2) are in traction and in the opposite direction of the cutting action of the reamer.
3. When the required diameter is achieved, the tool is ready to use.

Diameter Measurement

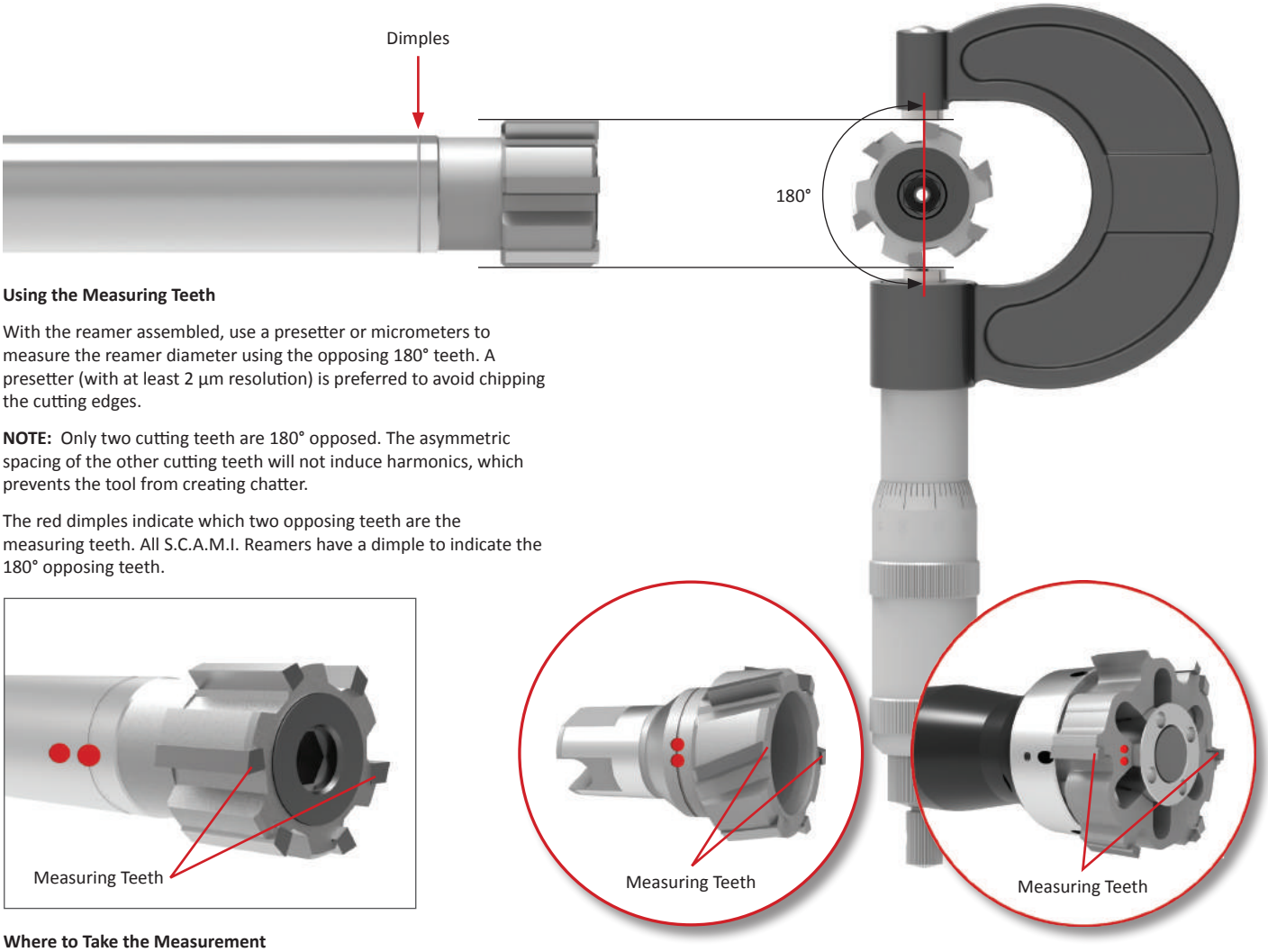

Using the Measuring Teeth

With the reamer assembled, use a presetter or micrometers to measure the reamer diameter using the opposing 180° teeth. A presetter (with at least 2 µm resolution) is preferred to avoid chipping the cutting edges.

NOTE: Only two cutting teeth are 180° opposed. The asymmetric spacing of the other cutting teeth will not induce harmonics, which prevents the tool from creating chatter.

The red dimples indicate which two opposing teeth are the measuring teeth. All S.C.A.M.I. Reamers have a dimple to indicate the 180° opposing teeth.

Where to Take the Measurement

When measuring the diameter, take the measurement from the area of the cutting tooth just below the transition from the lead angle to the OD edge. See the illustration below.

The back side of the OD edge has a back taper. This is why measuring from the location just below the lead angle/OD edge transition point results in the most accurate measurement (before the taper begins).

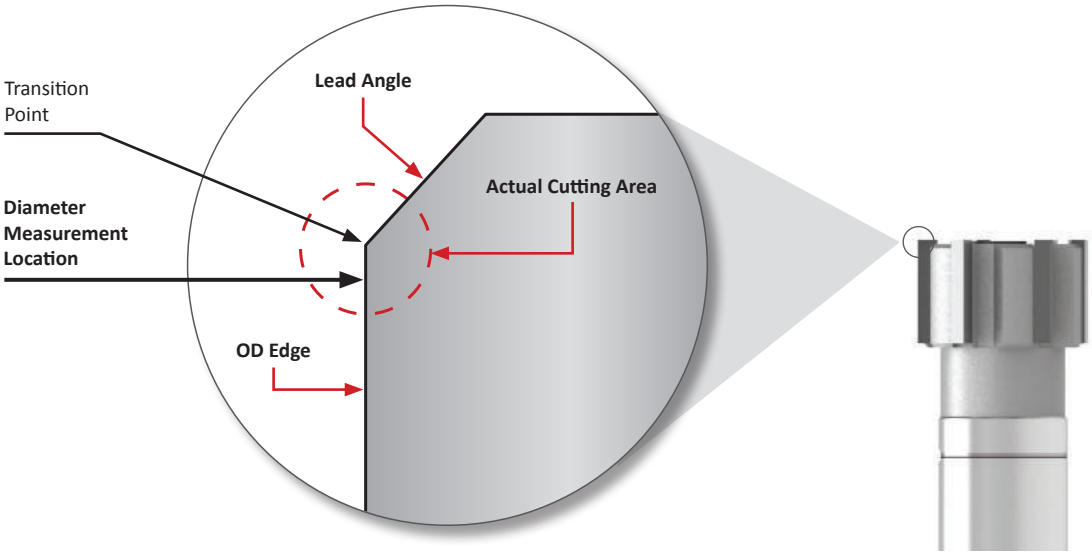

TIR Measurement

What is TIR?

Total indicator runout (TIR) refers to the distance to which the reamer is cutting off-center. In an ideal situation, the tool would begin in the exact center of the hole, and it would then rotate and cut in a perfect circle. This would result in a TIR of 0.

Because a perfect TIR of 0 is not practical, the goal is to maintain a TIR as close to 0 as possible. The closer the TIR is to 0, the better the reamer will perform.

Allied Machine recommends a TIR of < 0.0005” (0.013mm).

Think of attempting to draw a perfect circle with a drafting compass, but the pencil runs slightly outside the point where the circle began because the center point shifted during the pencil’s path. This slight area of overlap would be the TIR.

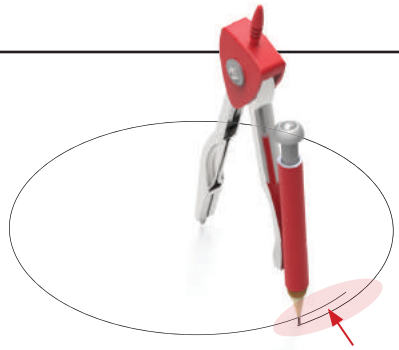

TIR: How far from center the tool will move during its path

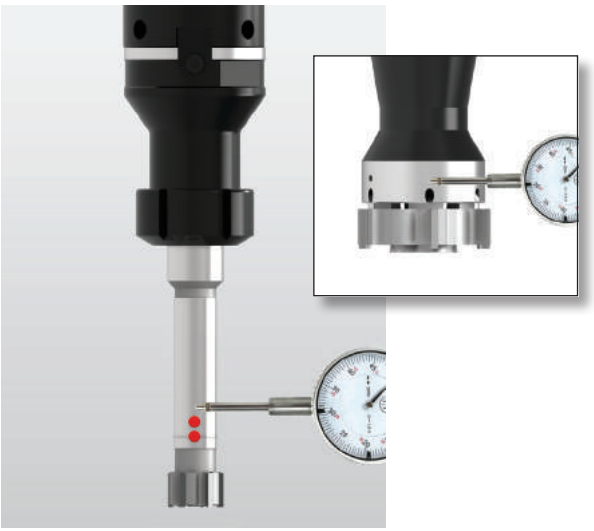

Step 1:

Check the TIR first on the mandrel (or ground) area of the reamer. Center the indicator in line with the dimple.

Measure the TIR by rotating the tool until the indicator reaches the highest value.

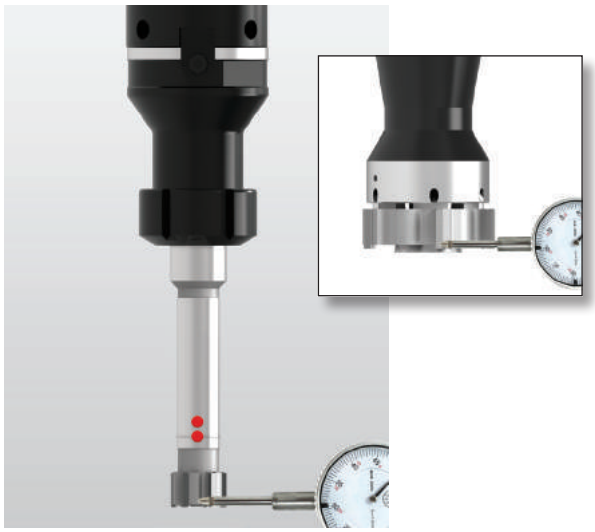

Step 2:

Next, check the TIR on the cutting teeth of the reamer.

NOTE: Rotate the tool counterclockwise to avoid chipping the cutting teeth with the indicator.

TIR Adjustment

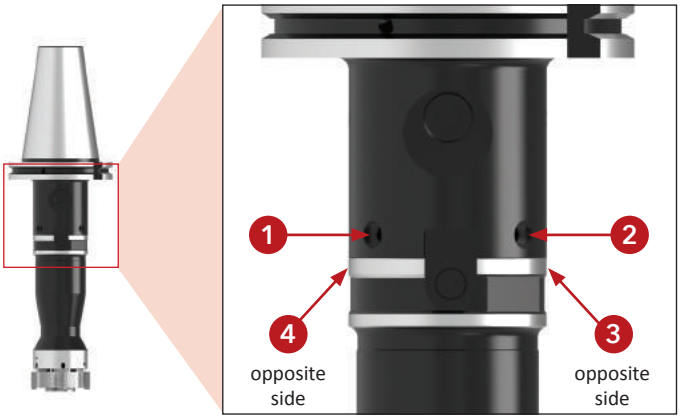

Step 1:

Place the tool into the machine spindle. Make contact with the 4 radial adjustment screws in a concentric fashion (this results in equal pressure surrounding the tool).

Tighten #1, then #3, followed by #2 and #4.

Step 2:

Swipe the dial indicator around the ground portion of the arbor near the coolant outlet holes to verify the TIR.

The TIR should be within 0.0005” (as close to 0 as possible). This will ensure the TIR check on the cutting teeth will be more true. It also means the arbor is running true to the shank.

Step 3:

Once the TIR is checked on the arbor, check the TIR on the cutting teeth. Rotate the tool counterclockwise to avoid chipping the cutting teeth.

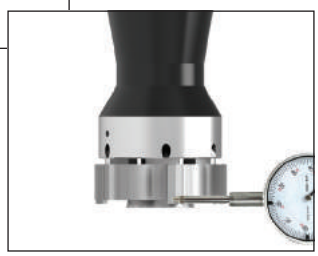

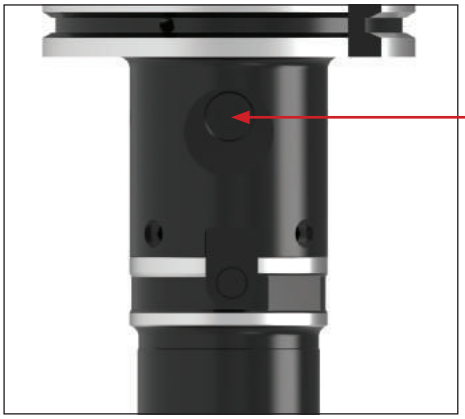

Step 4:

Tighten down the central clamping screws. During the tightening, the tool body will shift slightly. Repeat the TIR check on the cutting teeth, and adjust as necessary.

Troubleshooting Guide

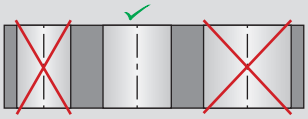

Oversized Hole

- Reamer is running eccentric to the center of the machine spindle ▶ Use modular system with radial adjustment
- Excessive misalignment causing reamer to cut on back taper ▶ Fix the misalignment
- Material build up on cutting edges ▶ Replace the coolant or change the cutting speed
- Reamer diameter is too large ▶ Use smaller reamer or regrind existing reamer

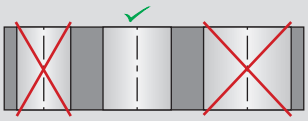

Undersized Hole

- The reamer diameter is too small ▶ Use larger reamer
- The reamer diameter is worn ▶ Expand, regrind, or replace the reamer
- The coolant is not suitable ▶ Replace the coolant
- Stock allowance is too small ▶ Increase the stock allowance
- The cutting speed is too low ▶ Increase the cutting speed

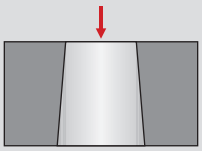

Tapered Hole

- Excessive misalignment ▶ Correct the misalignment

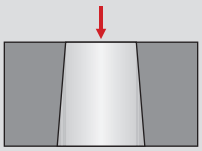

Burr at Hole Entry

- Excessive misalignment ▶ Correct the misalignment

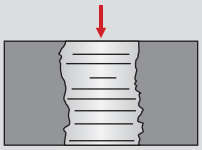

Hole is Not Straight

- Concentricity and alignment error between the workpiece and the tool ▶ Correct the misalignment and use the modular system with radial adjustment
- Asymmetrical cutting or angled surfaces ▶ Create a chamfer on the lead-in

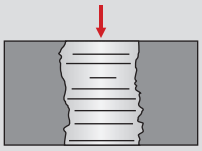

Poor Hole Finish

- One cutting edge is chipped ▶ Regrind the reamer
- The lead-in is irregular ▶ Regrind the reamer
- Back taper on the cutting edge is too great ▶ Regrind the reamer
- Excessive misalignment ▶ Correct the misalignment or use the modular system
- Cutting data is not correct ▶ Verify the cutting data
- Poor chip evacuation ▶ Verify the coolant volume and pressure or use through tool coolant

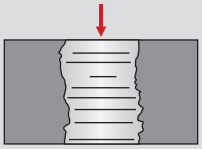

Reamer Creates Excessive Torque Loading

- Back taper on the cutting edge is too small ▶ Regrind the reamer
- The radially ground land is too wide ▶ Regrind the reamer
- The coolant is not suitable ▶ Replace the coolant

Notes

Notes

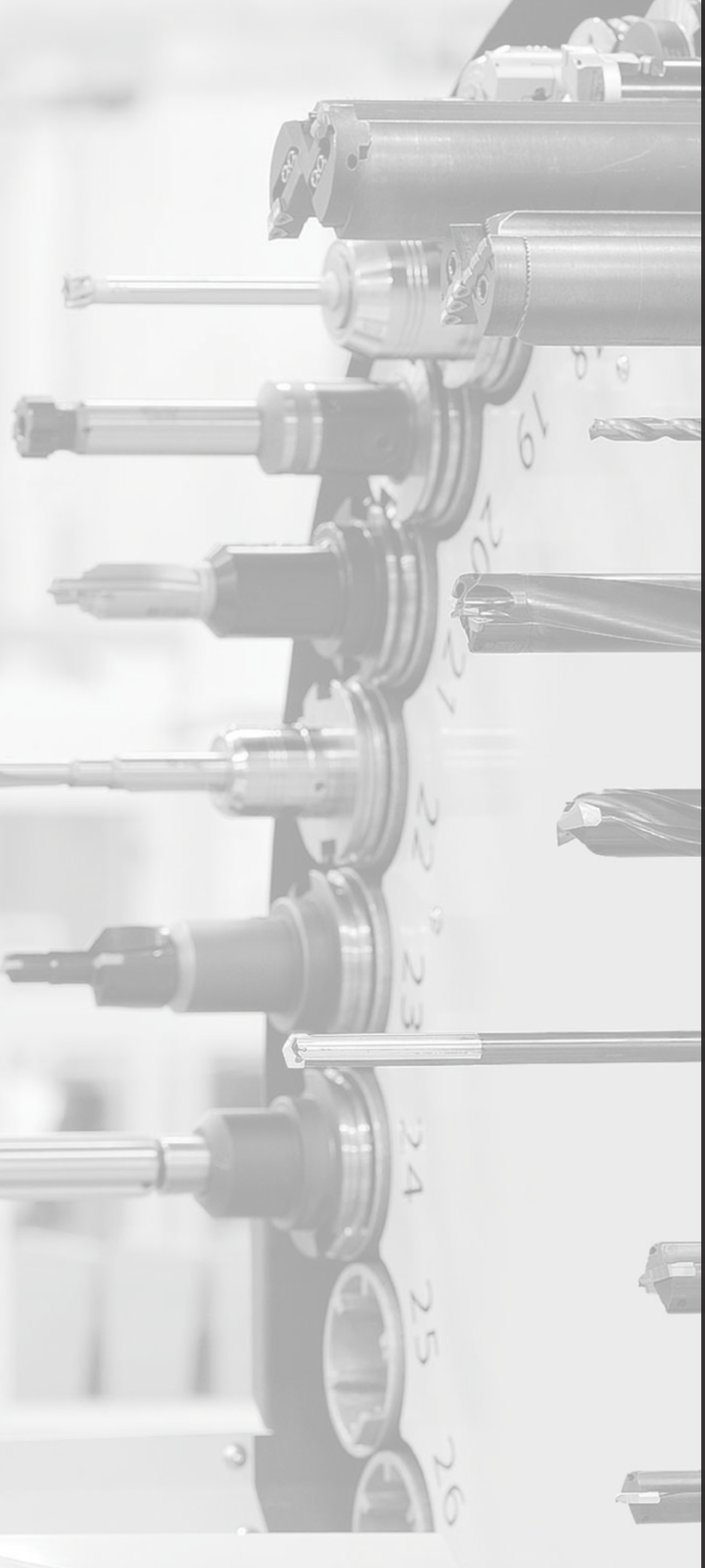

ALLIED MACHINE & ENGINEERING

Warranty Information

Allied Machine & Engineering warrants to original equipment manufacturers, distributors, industrial and commercial users of its products that each new product manufactured or supplied by Allied Machine shall be free from defects in material and workmanship.

Allied Machine's obligation under this warranty is limited to furnishing without additional charge a replacement or, at its option repairing or issuing credit for any product which shall within one year from the date of sale be returned freight prepaid to the plant designated by an Allied Machine representative and which upon inspection is determined by Allied Machine to be defective in materials or workmanship.

Complete information as to operating conditions, machine, set-up, and application of cutting fluid should accompany any product returned for inspection. The provisions of this warranty shall not apply to any Allied Machine products which have been subjected to misuse, improper operating conditions, machine set-up or application of cutting fluid or which have been repaired or altered if such repair or alteration in the judgment of Allied Machine would adversely affect performance of the product.

THIS WARRANTY IS IN LIEU OF ALL OTHER WARRANTIES, EXPRESS OR IMPLIED, INCLUDING ANY IMPLIED WARRANTY OF MERCHANTABILITY OR FITNESS FOR A PARTICULAR PURPOSE. Allied Machine shall have no liability or responsibility on any claim of any kind, whether in contract, tort or otherwise, for any loss or damage arising out of, connected with, or resulting from the manufacture, sale, delivery or use of any product sold hereunder, in excess of the cost of replacement or repair as provided herein.

ALL PRICES, DELIVERIES, DESIGNS, AND MATERIALS ARE SUBJECT TO CHANGE WITHOUT NOTICE.

Certified Management System

Allied Machine & Engineering
Registered to ISO 9001
10001329

United States

Allied Machine & Engineering
120 Deeds Drive
Dover OH 44622
United States

Phone:
+1.330.343.4283

Fax:
+1.330.602.3400

Toll Free USA and Canada:
800.321.5537

Toll Free USA and Canada:
800.223.5140

Allied Machine & Engineering
485 W Third Street
Dover OH 44622
United States

Phone:
+1.330.343.4283

Fax:
+1.330.364.7666
(Engineering Dept.)

Toll Free USA and Canada:
800.321.5537

Europe

Allied Machine & Engineering Co. (Europe) Ltd.
93 Vantage Point
Pensnett Estate
Kingswinford
West Midlands
DY6 7FR England

Phone:
+44 (0) 1384.400900

Wohlhaupter GmbH
Maybachstrasse 4
Postfach 1264
72636 Frickenhausen
Germany

Phone:
+49 (0) 7022.408.0

Fax:
+49 (0) 7022.408.212

Asia

Wohlhaupter India Pvt. Ltd.
B-23, 2nd Floor
B Block Community Centre
Janakpuri, New Delhi - 110058
India

Phone:
+91 (0) 11.41827044

Your local Allied Machine representative:

ALLIED MACHINE & ENGINEERING

www.alliedmachine.com

Allied Machine & Engineering is registered by DQS to **ISO 9001 10001329**

© 2018 Allied Machine & Engineering
Available Online Only: AMPC-C
Publish Date: June 2018