Indexable

BTA

Deep Hole Drilling

UNITAC

Member IMC Group

How to use this catalog

■Option 1

Use the information in Section ❷, ❸, ❹, or ❺ on each page to choose the tool size required for your operation. The applicable inserts are indicated in the left column of Section ❻ or Section ⓫. For customized drill heads, see Sections ❼ and ❽. The guide pads are listed in the right columns of Section ❻.

■Option 2

Use **Drill Head Categories** on pages **006** to find your desired drills.

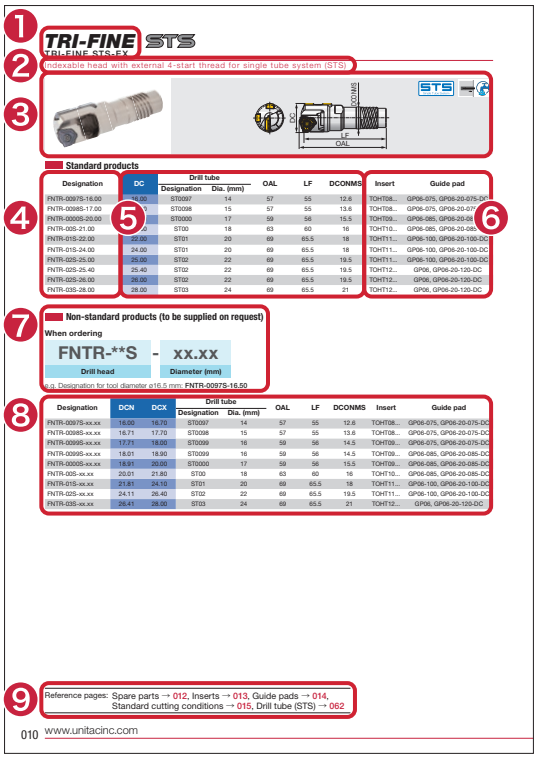

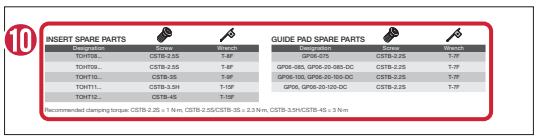

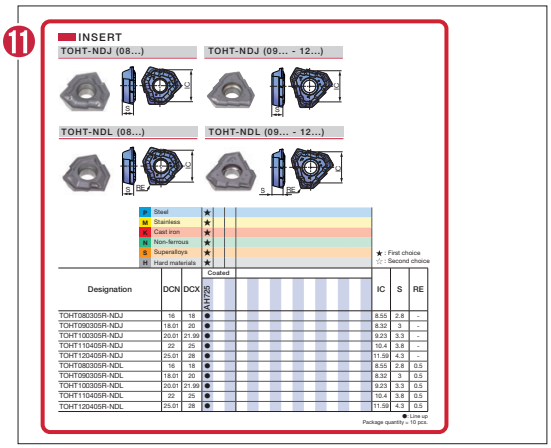

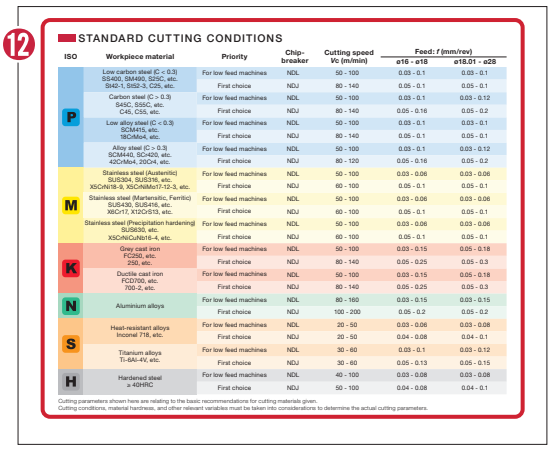

❶ : Series name
❷ : Feature
❸ : Appearance and dimension drawing
❹ : Item designation
❺ : Dimension table
❻ : Applicable inserts and guide pads
❼ : Ordering requirements of Non-standard products
❽ : Dimension table of Non-standard products
❾ : Reference pages
❿ : Spare parts
⓫ : Inserts
⓬ : Standard cutting conditions

ISO 13399 - Cutting tool data representation and exchange

What is ISO 13399?

This *Indexable BTA Deep Hole Drilling* catalog is created in compliance with ISO 13399.

ISO 13399 defines cutting tool data representation and exchange, allowing the accurate exchange of tooling data among computer aided applications that support and adhere to the standard, including CAD, CAM, CAE, PDM, PLM and tool management systems.

Shown below are examples of the ISO 13399 symbols.

	Before	ISO 13399
Insert	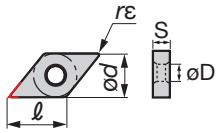	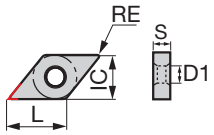
Drill	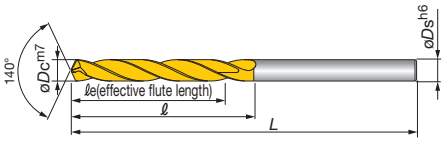	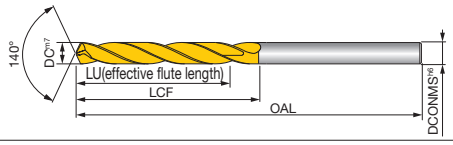

ISO 13399 standardizes not only the format of 2D and 3D CAD data but also the tool dimension symbols (properties) and reference position information. This allows the tool information to be read and combined into NC programs and CAM software, regardless of any tool maker's data. In addition to the General Catalog (paper catalog), we are also updating the symbols in the e-catalog (electronic catalog on our website) to the properties conforming to ISO 13399. The e-catalog also provides 2D and 3D CAD data in accordance with ISO 13399 standard.

Drill

New symbol	Old symbol	Description
BD	***øD1, øD2, øD3***	Body external diameter
CICT	**z**	Number of inserts
CND	**-**	Oil hole diameter
CNT	**-**	Oil hole plug size
CRKS	***S***	Mounting screw size
DC	***øDc***	Machining diameter
DCONMS	***øDs***	Mounting part diameter on the machine
DCONWS	***øD, ød2***	Mounting part diameter on the workpiece
DCSFMS	***øD***	Connecting part diameter
KAPR	**κ**	Cutting edge angle
LCF	***ℓ***	Flute length
LF	***Lf***	Standard length (from the drill shoulder)
LPR	**-**	Parting length (from flange to tip)
LS	***ℓs***	Shank length
LU	***ℓ***	Machinable depth
NOF	**z**	Number of flutes
OAL	***L***	Overall length (from tip)
PL	**PL**	Distance from drill tip to shoulder
ZEFP	**Z eff**	Number of effective cutting edges on periphery

Insert

New symbol	Old symbol	Description
IC	***ød***	Inscribed circle diameter
INSL	**B**	Insert length
LE	**A**	Effective cutting edge length
RE	***r***	Corner radius
S	**T**	Thickness
W1	**-**	Insert width

Note:
- Symbols unspecified in ISO 13399 standard and Unitac's original symbols are not included.
- The symbols still under discussion are included. Please note any change or addition may occur.

CAD data provided in e-catalog

● **2D data (DXF format file)**

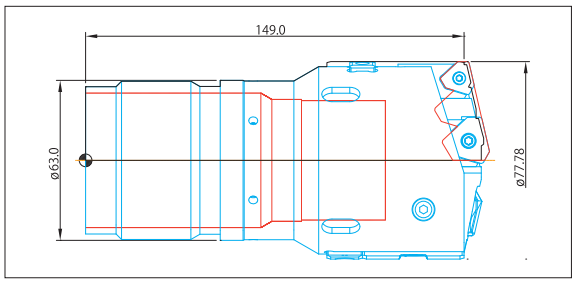

Includes actual cutting edge curve (CUT layer) and body cross section (NOCUT layer).

● **3D data Light type (STP format file): Can be used to check tool path and interference.**

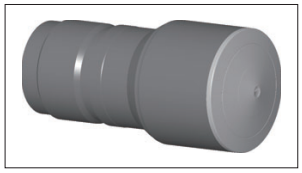

A rotating body model of an actual cutting edge curve and a body cross section.

● **3D data Detail type (STP format file): Can be used to create a new tool layout chart. (Can be combined with any insert model on a CAD software.)**

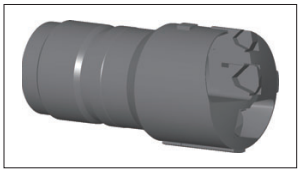

UNITAC

Member IMC Group

Indexable BTA

Deep Hole Drilling

		Page
	TRI-FINE ø16 mm - ø40 mm	011
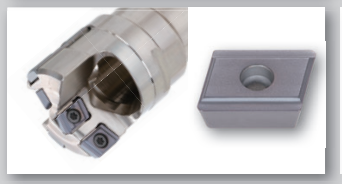	**FINE-BEAM** ø25 mm - ø89 mm	019
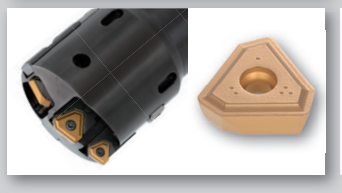	**UNIDEX** ø38 mm - ø293.99 mm	031

Counterboring, Trepanning

		Page
	KUSTR, KUDTR ø25 mm - ø293.99 mm	058
	UTT ø100 mm - ø328 mm	077

Other

		Page
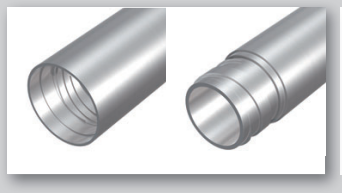	**TUBES**	087

Drill Head Categories

Indexable Drill Heads

Applications		STS (Single Tube System)			DTS (Double Tube System)		
		TRI-FINE	***FINE-BEAM***	***UNIDEX***	***TRI-FINE***	***FINE-BEAM***	***UNIDEX***
		FNTR	FNBM	KUSTS	FNTR-D	FNBM-D	KUDTS
Drill heads							
Drill diameter (mm)		ø16 - ø40	ø25 - ø89	ø38 - ø293.99	ø18.4 - ø40	ø25 - ø65	ø38 - ø183.99
Thread types	External 4-start thread	○	○	○	○	○	○
	Internal single-start thread	○	○	○	-	-	-
Hole tolerance		IT10	IT10	IT10	IT10	IT10	IT10
Surface finish Ra (μm)		2	2	3	2	2	3
Machines	Deep hole drilling machines	○	○	○	○	○	○
	Lathes	-	-	-	○	○	○
	Machining centers M/C	-	-	-	○	○	○
Workpiece materials	P Steel	★★★	★★★	★★★	★★★	★★★	★★★
	M Stainless	★★★	★★★	★★★	★★★	★★★	★★★
	K Cast iron	★★★	★★★	★★★	★★★	★★★	★★★
	N Non-ferrous	★★★	★★★	★★★	★★★	★★★	★★★
	S Superalloys	★★	★★	★★	★★	★★	★★
	H Hard materials (≥40HRC)	★★	★★	★★	★★	★★	★★
Insert type		TOHT	FBH / FBM	NPMX / TPMX	TOHT	FBH / FBM	NPMX / TPMX
Plus Cartridge and Guide pad +1 mm - +5 mm		-	-	○	-	-	○
Page		012 - 013	020 - 021	032 - 043	014	022	044 - 048

★★★(Excellent) ◄—► ★(Standard)

Counterboring Tools

Indexable Counterboring Heads

Applications		STS (Single Tube System)				DTS (Double Tube System)	
		KUSTR				KUDTR	
Drill head							
Drill diameter (mm)		ø25 - ø39.99	ø40 - ø291.99	ø25 - ø39.99	ø40 - ø293.99	ø25 - ø39.99	ø40 - ø183.99
Thread type	External 4-start thread	○	○	-	-	○	○
	Internal single-start thread	-	-	○	○	-	-
Hole tolerance		IT10	IT10	IT10	IT10	IT10	IT10
Surface finish Ra (μm)		2	2	2	2	2	2
Machine	Deep hole drilling machines	○	○	○	○	○	○
	Lathes	-	-	-	-	○	○
	Machining centers M/C	-	-	-	-	○	○
Workpiece material	P Steel	★★★	★★★	★★★	★★★	★★★	★★★
	M Stainless	★★★	★★★	★★★	★★★	★★★	★★★
	K Cast iron	★★★	★★★	★★★	★★★	★★★	★★★
	N Non-ferrous	★★★	★★★	★★★	★★★	★★★	★★★
	S Superalloys	★★	★★	★★	★★	★★	★★
	H Hard materials (≥40HRC)	★★	★★	★★	★★	★★	★★
Insert type*		IIS160	TPMX	IIS160	TPMX	IIS160	TPMX
Plus Cartridge and Guide pad +1 mm - +5 mm		-	○	-	○	-	○
Page		059	060	062	063	065	066

★★★(Excellent) ◄——► ★(Standard)

*See page 063 for TPMX inserts and page 064 for IIS inserts.

Trepanning Tools

Indexable Trepanning Heads

Applications		STS (Single Tube System)	
		UTT	
Drill head			
Drill diameter (mm)		ø100 - ø328	ø100 - ø305.99
Thread type	External 4-start thread	○	-
	Internal single-start thread	-	○
Hole tolerance		IT10	IT10
Surface finish Ra (μm)		2	2
Machine	Deep hole drilling machines	○	○
	Lathes	-	-
	Machining centers M/C	-	-
Workpiece material	P Steel	★★★	★★★
	M Stainless	★★★	★★★
	K Cast iron	★★★	★★★
	N Non-ferrous	★★★	★★★
	S Superalloys	★★	★★
	H Hard materials (≥40HRC)	★★	★★
Insert type*		TPMX	TPMX
Plus Cartridge and Guide pad +1 mm - +5 mm		-	-
Page		077	079

★★★(Excellent) ◄——► ★(Standard)

*See page 044 for UNIDEX inserts.

Drill Tube Categories

Drill Tubes

Applications				STS (Single Tube System)		DTS (Double Tube System)	
				ST	UB	OT	IT
Drill tubes							
Tube diameter (mm)				ø14 - ø274	ø13 - ø274	ø18 - ø166	ø10 - ø130
Thread type				Internal 4-start thread	External single-start thread	Internal 4-start thread	-
Drill heads	Indexable	For solid drilling	FNTR	○	○	○	○
			FNBM	○	○	○	○
			KUSTS	○	○	-	-
			KUDTS	-	-	○	○
		For counterboring	KUSTR	○	○	-	-
			KUDTR	-	-	○	○
		For trepanning	UTT	○	○	-	-
Drill diameter (mm)				ø15.6 - ø291.99	ø15.51 - ø293.99	ø18.4 - ø183.99	ø18.4 - ø183.99
Page				087	089	091	091

Grade

Grade	Coating: Main composition	Coating: Thickness / µm	Application	Feature	FNBM	FNTR	UNIDEX
New **T9225** P15 - P25	Ti compound +Al2O3	18	P	- First choice for roughing to medium cuttings - High fracture resistance			●
AH725 P15 - P30 M15 - M30 K25 -K30 S15 - S25	(Ti, Al)N	2	P M K S	- Good balance between wear and chipping resistance - Suitable for machining steel and stainless steel under general cutting conditions	●	●	
AH8015 M10 - M20 S10 - S20	(Al,Ti)N	3.5	P M K S H	- Good balance between wear and fracture resistance - First choice for machining heat-resistant alloy under general cutting conditions	●		●
New **AH9130** P15 - P35 M25 - M35 K10 - K25 S15 - S30	(Ti, Al)N	4.5	P M K S	- High wear resistance - Designed for drilling various materials	●	●	●

Single Tube System (STS) and Double Tube System (DTS)

Single Tube System (STS)

The STS is also referred to as the BTA system in the deep hole drilling process. A large volume of coolant is pumped under high pressure to the cutting area in the workpiece. Chips are then forced out through the drill tube at the back and do not touch the workpiece providing an outstanding surface finish. STS is a stable method to create holes with high accuracy by using a dedicated drilling machine and a sealing with the workpiece.

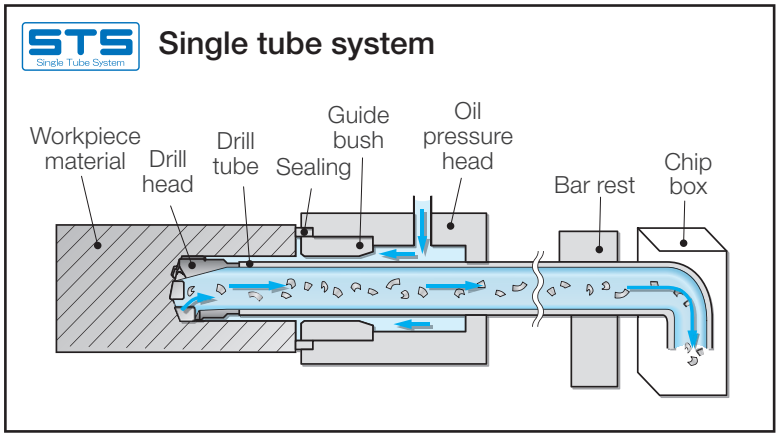

Double Tube System (DTS)

The DTS is characterized by its two tube construction and is therefore known as the double tube system. A sealing system and pressure head, which is required in the Single Tube System (STS), is not necessary for the DTS and it is therefore suitable for conventional general purpose machines such as CNC lathes or machining centers.

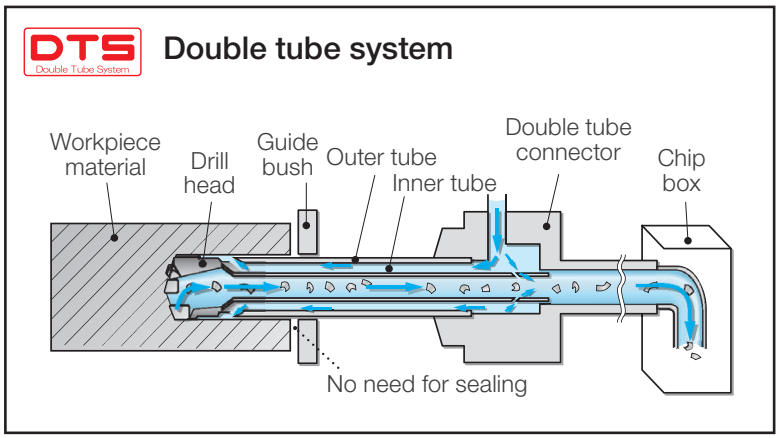

TRI-FINE

ø16 mm - ø40 mm

TRI-FINE STS

TRI-FINE STS-EX

Indexable head with external 4-start thread for single tube system (STS)

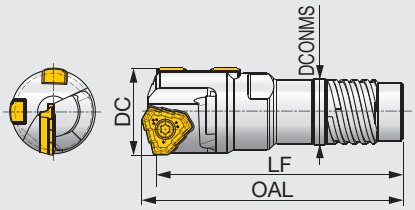

Standard products

Designation	DC	Drill tube		OAL	LF	DCONMS	Insert	Guide pad
		Designation	Dia. (mm)					
FNTR-0097S-16.00	16.00	ST0097	14	58	55	12.6	TOHT08...	GP06-075, GP06-20-075-DC
FNTR-0098S-17.00	17.00	ST0098	15	58	55	13.6	TOHT08...	GP06-075, GP06-20-075-DC
FNTR-0099S-18.00	18.00	ST0099	17	59	56	14.5	TOHT09...	GP06-085, GP06-20-085-DC
FNTR-00S-21.00	21.00	ST00	18	62	60	16	TOHT10...	GP06-085, GP06-20-085-DC
FNTR-01S-22.00	22.00	ST01	20	69	65.5	18	TOHT11...	GP06-100, GP06-20-100-DC
FNTR-01S-24.00	24.00	ST01	20	69	65.5	18	TOHT11...	GP06-100, GP06-20-100-DC
FNTR-02S-25.00	25.00	ST02	22	69	65.5	19.5	TOHT11...	GP06-100, GP06-20-100-DC
FNTR-02S-25.40	25.40	ST02	22	69	65.5	19.5	TOHT12...	GP06, GP06-20-120-DC
FNTR-02S-26.00	26.00	ST02	22	69	65.5	19.5	TOHT12...	GP06, GP06-20-120-DC
FNTR-03S-28.00	28.00	ST03	24	69	65.5	21	TOHT12...	GP06, GP06-20-120-DC
FNTR-03S-28.58	28.58	ST03	24	74.6	70	21	TOHT13...	GP06, GP06-20-120-DC
FNTR-04S-29.00	29.00	ST04	26	79.6	75	23.5	TOHT13...	GP06, GP06-20-120-DC
FNTR-04S-30.00	30.00	ST04	26	79.6	75	23.5	TOHT13...	GP07, GP07-20-120-DC
FNTR-04S-31.00	31.00	ST04	26	79.6	75	23.5	TOHT13...	GP07, GP07-20-120-DC
FNTR-05S-31.75	31.75	ST05	28	79.6	75	25.5	TOHT13...	GP07, GP07-20-120-DC
FNTR-05S-32.00	32.00	ST05	28	79.6	75	25.5	TOHT13...	GP07, GP07-20-120-DC
FNTR-05S-33.00	33.00	ST05	28	79.9	74.5	25.5	TOHT14...	GP07, GP07-20-120-DC
FNTR-06S-34.93	34.93	ST06	30	84.9	79.5	28	TOHT14...	GP07, GP07-20-120-DC
FNTR-06S-35.00	35.00	ST06	30	84.9	79.5	28	TOHT14...	GP07, GP07-20-120-DC
FNTR-07S-37.00	37.00	ST07	33	94.9	89.5	30	TOHT14...	GP07, GP07-20-120-DC
FNTR-07S-38.00	38.00	ST07	33	94.9	89.5	30	TOHT14...	GP07, GP07-20-120-DC
FNTR-07S-38.10	38.10	ST07	33	94.9	89.5	30	TOHT14...	GP07, GP07-20-120-DC
FNTR-08S-40.00	40.00	ST08	36	99.9	94.5	33	TOHT14...	GP08, GP08-25-155-DC

Non-standard products (to be supplied on request)

When ordering

FNTR-**S	-	xx.xx
Drill head		Diameter (mm)

e.g. Designation for tool diameter ø16.5 mm: **FNTR-0097S-16.50**

Designation	DCN	DCX	Drill tube		OAL	LF	DCONMS	Insert	Guide pad
			Designation	Dia. (mm)					
FNTR-0097S-xx.xx	16.00	16.70	ST0097	14	58	55	12.6	TOHT08...	GP06-075, GP06-20-075-DC
FNTR-0098S-xx.xx	16.71	17.70	ST0098	15	58	55	13.6	TOHT08...	GP06-075, GP06-20-075-DC
FNTR-0099S-xx.xx	17.71	18.00	ST0099	16	59	56	14.5	TOHT08...	GP06-075, GP06-20-075-DC
FNTR-0099S-xx.xx	18.01	18.90	ST0099	16	59	56	14.5	TOHT09...	GP06-085, GP06-20-085-DC
FNTR-0000S-xx.xx	18.91	20.00	ST0000	17	59	56	15.5	TOHT09...	GP06-085, GP06-20-085-DC
FNTR-00S-xx.xx	20.01	21.00	ST00	18	62	60	16	TOHT10...	GP06-085, GP06-20-085-DC
FNTR-00S-xx.xx	21.01	21.80	ST00	18	62	60	16	TOHT10...	GP06-100, GP06-20-100-DC
FNTR-01S-xx.xx	21.81	21.99	ST01	20	66	63.5	18	TOHT10...	GP06-100, GP06-20-100-DC
FNTR-01S-xx.xx	22.00	24.10	ST01	20	69	65.5	18	TOHT11...	GP06-100, GP06-20-100-DC
FNTR-02S-xx.xx	24.11	25.00	ST02	22	69	65.5	19.5	TOHT11...	GP06-100, GP06-20-100-DC
FNTR-02S-xx.xx	25.01	26.40	ST02	22	69	65.5	19.5	TOHT12...	GP06, GP06-20-120-DC
FNTR-03S-xx.xx	26.41	28.00	ST03	24	69	65.5	21	TOHT12...	GP06, GP06-20-120-DC
FNTR-03S-xx.xx	28.01	28.70	ST03	24	74.6	70	21	TOHT13...	GP06, GP06-20-120-DC
FNTR-04S-xx.xx	28.71	29.99	ST04	26	79.6	75	23.5	TOHT13...	GP06, GP06-20-120-DC
FNTR-04S-xx.xx	30.00	31.00	ST04	26	79.6	75	23.5	TOHT13...	GP07, GP07-20-120-DC
FNTR-05S-xx.xx	31.01	32.00	ST05	28	79.6	75	25.5	TOHT13...	GP07, GP07-20-120-DC
FNTR-05S-xx.xx	32.01	33.30	ST05	28	79.9	74.5	25.5	TOHT14...	GP07, GP07-20-120-DC
FNTR-06S-xx.xx	33.31	36.20	ST06	30	84.9	79.5	28	TOHT14...	GP07, GP07-20-120-DC
FNTR-07S-xx.xx	36.21	39.00	ST07	33	94.9	89.5	30	TOHT14...	GP07, GP07-20-120-DC
FNTR-07S-xx.xx	39.01	39.60	ST07	33	94.9	89.5	30	TOHT14...	GP08, GP08-25-155-DC
FNTR-08S-xx.xx	39.61	40.00	ST08	36	99.9	94.5	33	TOHT14...	GP08, GP08-25-155-DC

Reference pages: Spare parts → 014, Inserts → 015, Guide pads → 017,
Standard cutting conditions → 018, Drill tube (STS) → 087

TRI-FINE STS

TRI-FINE STS-IN

Indexable head with internal single-start thread for single tube system (STS)

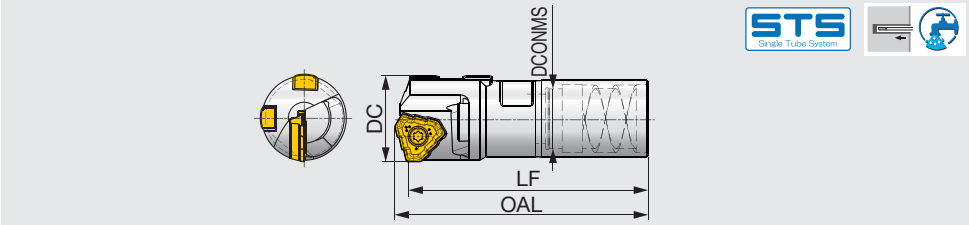

Standard products

Designation	DC	Drill tube		OAL	LF	DCONMS	Insert	Guide pad
		Designation	Dia. (mm)					
FNTR-13N-1-16.00	16.00	UB13-1	13	57	54	10.8	TOHT08...	GP06-075, GP06-20-075-DC
FNTR-14N-2-18.00	18.00	UB14-2	14	57	54	12.1	TOHT08...	GP06-075, GP06-20-075-DC
FNTR-18N-20.00	20.00	UB18	18	61	57.5	14.5	TOHT09...	GP06-085, GP06-20-085-DC
FNTR-20N-22.00	22.00	UB20	20	64	60.5	16	TOHT11...	GP06-100, GP06-20-100-DC
FNTR-20N-24.00	24.00	UB20	20	64	60.5	16	TOHT11...	GP06-100, GP06-20-100-DC
FNTR-22N-25.00	25.00	UB22	22	64	60.5	17	TOHT11...	GP06-100, GP06-20-100-DC
FNTR-22N-26.00	26.00	UB22	22	69	65	17	TOHT12...	GP06, GP06-20-120-DC
FNTR-24N-28.00	28.00	UB24	24	69	65	19	TOHT12...	GP06, GP06-20-120-DC
FNTR-24N-29.00	29.00	UB24	24	74.6	70	22	TOHT13...	GP06, GP06-20-120-DC
FNTR-26N-30.00	30.00	UB26	26	79.6	75	24	TOHT13...	GP07, GP07-20-120-DC
FNTR-26N-31.00	31.00	UB26	26	79.6	75	24	TOHT13...	GP07, GP07-20-120-DC
FNTR-28N-32.00	32.00	UB28	28	79.6	75	26	TOHT13...	GP07, GP07-20-120-DC

Non-standard products (to be supplied on request)

When ordering

FNTR-**N (-*)	-	xx.xx
Drill head		Diameter (mm)

e.g. Designation for tool diameter ø16.5 mm: **FNTR-13N-2-16.50**

Designation	DCN	DCX	Drill tube		OAL	LF	DCONMS	Insert	Guide pad
			Designation	Dia. (mm)					
FNTR-13N-1-xx.xx	16.00	16.00	UB13-1	13	57	54	10.8	TOHT08...	GP06-075, GP06-20-075-DC
FNTR-13N-2-xx.xx	16.01	16.50	UB13-2	13	57	54	11.1	TOHT08...	GP06-075, GP06-20-075-DC
FNTR-14N-1-xx.xx	16.51	17.25	UB14-1	14	57	54	11.8	TOHT08...	GP06-075, GP06-20-075-DC
FNTR-14N-2-xx.xx	17.26	18.00	UB14-2	14	57	54	12.1	TOHT08...	GP06-075, GP06-20-075-DC
FNTR-15N-xx.xx	18.01	19.00	UB15	15	57	54	12.8	TOHT09...	GP06-085, GP06-20-085-DC
FNTR-16.5N-xx.xx	19.01	19.99	UB16.5	16.5	57	54	13.8	TOHT09...	GP06-085, GP06-20-085-DC
FNTR-18N-xx.xx	20.00	20.00	UB18	18	61	57.5	14.5	TOHT09...	GP06-085, GP06-20-085-DC
FNTR-18N-xx.xx	20.01	21.00	UB18	18	61	58.5	14.5	TOHT10...	GP06-085, GP06-20-085-DC
FNTR-18N-xx.xx	21.01	21.99	UB18	18	61	58.5	14.5	TOHT10...	GP06-100, GP06-20-100-DC
FNTR-20N-xx.xx	22.00	24.99	UB20	20	64	60.5	16	TOHT11...	GP06-100, GP06-20-100-DC
FNTR-22N-xx.xx	25.00	25.00	UB22	22	64	60.5	17	TOHT11...	GP06-100, GP06-20-100-DC
FNTR-22N-xx.xx	25.01	26.99	UB22	22	69	65	17	TOHT12...	GP06, GP06-20-120-DC
FNTR-24N-xx.xx	27.00	28.00	UB24	24	69	65	19	TOHT12...	GP06, GP06-20-120-DC
FNTR-24N-xx.xx	28.01	29.99	UB24	24	74.6	70	22	TOHT13...	GP06, GP06-20-120-DC
FNTR-26N-xx.xx	30.00	31.99	UB26	26	79.6	75	24	TOHT13...	GP07, GP07-20-120-DC
FNTR-28N-xx.xx	32.00	32.00	UB28	28	79.6	75	26	TOHT13...	GP07, GP07-20-120-DC
FNTR-28N-xx.xx	32.01	33.99	UB28	28	79.9	74.5	26	TOHT14...	GP07, GP07-20-120-DC
FNTR-30N-xx.xx	34.00	36.99	UB30	30	94.9	89.5	27	TOHT14...	GP07, GP07-20-120-DC
FNTR-33N-xx.xx	37.00	39.00	UB33	33	99.9	94.5	30	TOHT14...	GP07, GP07-20-120-DC
FNTR-33N-xx.xx	39.01	39.99	UB33	33	99.9	94.5	30	TOHT14...	GP08, GP08-25-155-DC
FNTR-36N-xx.xx	40.00	40.00	UB36	36	104.9	99.5	33	TOHT14...	GP08, GP08-25-155-DC

Reference pages: Spare parts → 014, Inserts → 015, Guide pads → 017,
Standard cutting conditions → 018, Drill tube (STS) → 089

TRI-FINE DTS

TRI-FINE DTS-EX

Indexable head with external 4-start thread for double tube system (DTS)

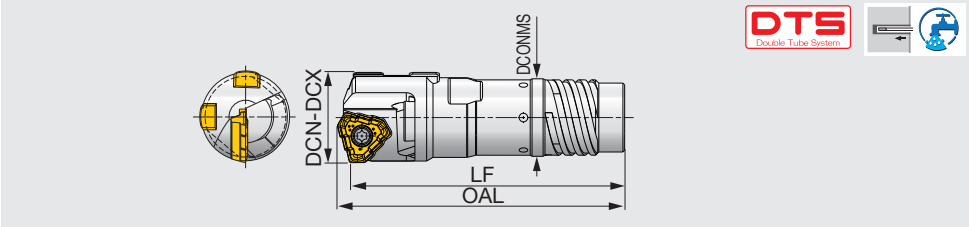

Non-standard products (to be supplied on request)

When ordering

FNTR-**D	-	xx.xx
Drill head		Diameter (mm)

e.g. Designation for tool diameter ø20 mm: **FNTR-00D-20.00**

Designation	DCN	DCX	Outer tube		OAL	LF	DCONMS	Insert	Guide pad
			Designation	Dia. (mm)					
FNTR-00D-xx.xx	18.40	20.00	OT00	18	62	59	16	TOHT09...	GP06-085, GP06-20-085-DC
FNTR-01D-xx.xx	20.01	21.00	OT01	19.5	66	63.5	18	TOHT10...	GP06-085, GP06-20-085-DC
FNTR-01D-xx.xx	21.01	21.80	OT01	19.5	66	63.5	18	TOHT10...	GP06-100, GP06-20-100-DC
FNTR-02D-xx.xx	21.81	21.99	OT02	21.5	66	63.5	19.5	TOHT10...	GP06-100, GP06-20-100-DC
FNTR-02D-xx.xx	22.00	24.10	OT02	21.5	69	65.5	19.5	TOHT11...	GP06-100, GP06-20-100-DC
FNTR-03D-xx.xx	24.11	25.00	OT03	23.5	69	65.5	21	TOHT11...	GP06-100, GP06-20-100-DC
FNTR-03D-xx.xx	25.01	26.40	OT03	23.5	69	65.5	21	TOHT12...	GP06, GP06-20-120-DC
FNTR-04D-xx.xx	26.41	28.00	OT04	26	74	70.5	23.5	TOHT12...	GP06, GP06-20-120-DC
FNTR-04D-xx.xx	28.01	28.70	OT04	26	79.6	75	23.5	TOHT13...	GP06, GP06-20-120-DC
FNTR-05D-xx.xx	28.71	29.99	OT05	28	79.6	75	25.5	TOHT13...	GP06, GP06-20-120-DC
FNTR-05D-xx.xx	30.00	31.00	OT05	28	79.6	75	25.5	TOHT13...	GP07, GP07-20-120-DC
FNTR-06D-xx.xx	31.01	32.00	OT06	30.5	84.6	80	28	TOHT13...	GP07, GP07-20-120-DC
FNTR-06D-xx.xx	32.01	33.30	OT06	30.5	84.9	79.5	28	TOHT14...	GP07, GP07-20-120-DC
FNTR-07D-xx.xx	33.31	36.20	OT07	33	94.9	89.5	30	TOHT14...	GP07, GP07-20-120-DC
FNTR-08D-xx.xx	36.21	39.00	OT08	35.5	99.9	94.5	33	TOHT14...	GP07, GP07-20-120-DC
FNTR-08D-xx.xx	39.01	39.60	OT08	35.5	99.9	94.5	33	TOHT14...	GP08, GP08-25-155-DC
FNTR-09D-xx.xx	39.61	40.00	OT09	39	104.9	99.5	36	TOHT14...	GP08, GP08-25-155-DC

INSERT SPARE PARTS

Designation	Screw	Wrench
TOHT08...	CSTB-2.5S	T-8F
TOHT09...	CSTB-2.5S	T-8F
TOHT10...	CSTB-3S	T-9F
TOHT11...	CSTB-3.5H	T-15F
TOHT12...	CSTB-4S	T-15F
TOHT13...	SR 16-212/L10	T-20/5
TOHT14...	SR 16-212/L10	T-20/5

GUIDE PAD SPARE PARTS

Designation	Screw	Wrench
GP06-075, GP06-20-075-DC	CSTB-2.2S	T-7F
GP06-085, GP06-20-085-DC	CSTB-2.2S	T-7F
GP06-100, GP06-20-100-DC	CSTB-2.2S	T-7F
GP06, GP06-20-120-DC (<28.00)	CSTB-2.2S	T-7F
GP06, GP06-20-120-DC (>ø28.01)	SR34-508	T-7F
GP07, GP07-20-120-DC	CSTB-3S	T-9F
GP08, GP08-25-155-DC	CSTB-3S	T-9F

Recommended clamping torque: CSTB-2.2S = 1 N·m, CSTB-2.5S = 1.3 N·m, CSTB-3S = 2.3 N·m, CSTB-3.5H/CSTB-4S = 3 N·m

Reference pages: Inserts → 015, Guide pads → 017, Standard cutting conditions → 018, Drill tube (DTS) → 091

INSERT

TOHT-NDJ (08...)(for general purpose)

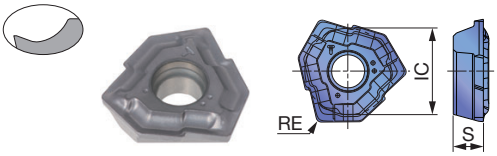

TOHT-NDJ (09... - 14...)(for general purpose)

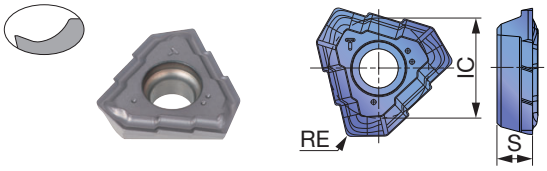

ID on insert

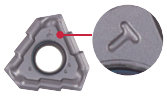

P	Steel	★	
M	Stainless	★	
K	Cast iron	★	
N	Non-ferrous	★	
S	Superalloys	☆	
H	Hard materials	☆	

★ : First choice
☆ : Second choice

Designation	IC	S	Coated AH9130	Coated AH725	DCN	DCX	RE
TOHT080305R-NDJ	8.55	2.8	●	●	16	18	0.5
TOHT090305R-NDJ	8.32	3	●	●	18.01	20	0.5
TOHT100305R-NDJ	9.23	3.3	●	●	20.01	21.99	0.5
TOHT110405R-NDJ	10.4	3.8	●	●	22	25	0.5
TOHT120405R-NDJ	11.59	4.3	●	●	25.01	28	0.5
TOHT130408R-NDJ	12.85	4.76		●	28.01	32	0.8
TOHT140510R-NDJ	16.85	5.26		●	32.01	40	1

●: Line up
Package quantity = 10 pcs.

TOHT-NDL (08...)(good chip control at low feeds)

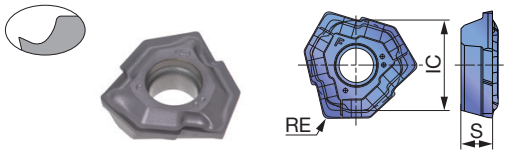

TOHT-NDL (09... - 13...)(good chip control at low feeds)

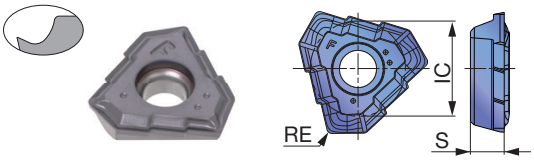

ID on insert

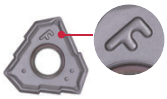

P	Steel	★	
M	Stainless	★	
K	Cast iron	★	
N	Non-ferrous	★	
S	Superalloys	★	
H	Hard materials	★	

★ : First choice
☆ : Second choice

Designation	IC	S	Coated AH725	DCN	DCX	RE
TOHT080305R-NDL	8.55	2.8	●	16	18	0.5
TOHT090305R-NDL	8.32	3	●	18.01	20	0.5
TOHT100305R-NDL	9.23	3.3	●	20.01	21.99	0.5
TOHT110405R-NDL	10.4	3.8	●	22	25	0.5
TOHT120405R-NDL	11.59	4.3	●	25.01	28	0.5
TOHT130408R-NDL	12.85	4.76	●	28.01	32	0.8

●: Line up
Package quantity = 10 pcs.

Recommended feed rates

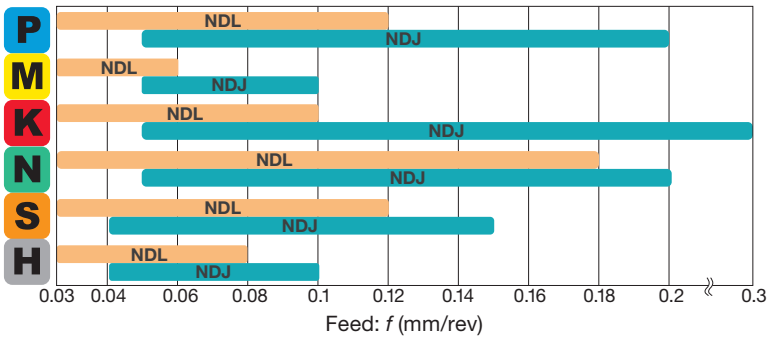

RECOMMENDED INSERT

ISO	Workpiece material	Hardness	First choice	Troubleshooting	
				Chipping resistance	Wear resistance
P	Low carbon steels (C ≤ 0.3%)	- 200 HB	NDJ, AH9130	NDJ, AH9130	NDJ, AH725
	Carbon steels (C > 0.3%) Alloy steels	- 300 HB	NDJ, AH9130	NDJ, AH9130	NDJ, AH725
	Low alloy steels	- 300 HB	NDJ, AH9130	NDJ, AH9130	NDJ, AH725
	Alloy steels	- 300 HB	NDJ, AH9130	NDJ, AH9130	NDJ, AH725
M	Stainless steel	- 200 HB	NDJ, AH9130	NDJ, AH9130	NDJ, AH725
K	Grey cast irons	150 - 250 HB	NDJ, AH9130	NDJ, AH9130	NDJ, AH725
	Ductile cast irons	150 - 250 HB	NDJ, AH9130	NDJ, AH9130	NDJ, AH725
N	Aluminium alloy	-	NDJ, AH9130	NDJ, AH9130	NDJ, AH725
S	Titanium alloys Heat-resistant alloys	- 40 HRC	NDJ, AH9130	NDJ, AH9130	NDJ, AH9130
H	Hardened steel	- 50 HRC	NDJ, AH9130	NDJ, AH9130	NDJ, AH9130

GUIDE PAD

GP-DC

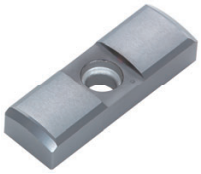

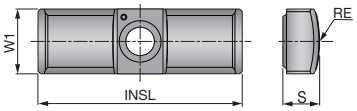

Double chamfer

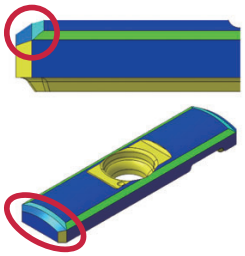

| Designation | W1 | INSL | Coated | | |

STANDARD CUTTING CONDITIONS

ISO	Workpiece material	Priority	Chip-breaker	Cutting speed *Vc* (m/min)	Feed: *f* (mm/rev)		
					ø16 - ø18	ø18.01 - ø28	ø28.01 - ø40
P	Low carbon steel (C < 0.3) SS400, SM490, S25C, etc. St42-1, St52-3, C25, etc.	For low feed machines	NDL	50 - 100	0.03 - 0.1	0.03 - 0.1	0.04-0.08
		First choice	NDJ	80 - 140	0.05 - 0.1	0.05 - 0.1	0.08-0.14
	Carbon steel (C > 0.3) S45C, S55C, etc. C45, C55, etc.	For low feed machines	NDL	50 - 100	0.03 - 0.1	0.03 - 0.12	0.04-0.14
		First choice	NDJ	80 - 140	0.05 - 0.16	0.05 - 0.2	0.06-0.2
	Low alloy steel (C < 0.3) SCM415, etc. 18CrMo4, etc.	For low feed machines	NDL	50 - 100	0.03 - 0.1	0.03 - 0.1	0.04-0.08
		First choice	NDJ	80 - 140	0.05 - 0.1	0.05 - 0.1	0.08-0.14
	Alloy steel (C > 0.3) SCM440, SCr420, etc. 42CrMo4, 20Cr4, etc.	For low feed machines	NDL	50 - 100	0.03 - 0.1	0.03 - 0.12	0.04-0.14
		First choice	NDJ	80 - 120	0.05 - 0.16	0.05 - 0.2	0.06-0.2
M	Stainless steel (Austenitic) SUS304, SUS316, etc. X5CrNi18-9, X5CrNiMo17-12-3, etc.	For low feed machines	NDL	50 - 100	0.03 - 0.06	0.03 - 0.06	0.03-0.06
		First choice	NDJ	60 - 100	0.05 - 0.1	0.05 - 0.1	0.05-0.1
	Stainless steel (Martensitic, Ferritic) SUS430, SUS416, etc. X6Cr17, X12CrS13, etc.	For low feed machines	NDL	50 - 100	0.03 - 0.06	0.03 - 0.06	0.03-0.06
		First choice	NDJ	60 - 100	0.05 - 0.1	0.05 - 0.1	0.05-0.1
	Stainless steel (Precipitation hardening) SUS630, etc. X5CrNiCuNb16-4, etc.	For low feed machines	NDL	50 - 100	0.03 - 0.06	0.03 - 0.06	0.03-0.06
		First choice	NDJ	60 - 100	0.05 - 0.1	0.05 - 0.1	0.05-0.1
K	Grey cast iron FC250, etc. 250, etc.	For low feed machines	NDL	50 - 100	0.03 - 0.15	0.05 - 0.18	0.05-0.18
		First choice	NDJ	80 - 140	0.05 - 0.25	0.05 - 0.3	0.05-0.3
	Ductile cast iron FCD700, etc. 700-2, etc.	For low feed machines	NDL	50 - 100	0.03 - 0.15	0.05 - 0.18	0.05-0.18
		First choice	NDJ	80 - 140	0.05 - 0.25	0.05 - 0.3	0.05-0.3
N	Aluminium alloys	For low feed machines	NDL	80 - 160	0.03 - 0.15	0.03 - 0.15	0.03-0.15
		First choice	NDJ	100 - 200	0.05 - 0.2	0.05 - 0.2	0.05-0.2
S	Heat-resistant alloys Inconel 718, etc.	For low feed machines	NDL	20 - 50	0.03 - 0.06	0.03 - 0.08	0.06-0.08
		First choice	NDJ	20 - 50	0.04 - 0.08	0.04 - 0.1	0.04-0.1
	Titanium alloys Ti-6Al-4V, etc.	For low feed machines	NDL	30 - 60	0.03 - 0.1	0.03 - 0.12	0.03-0.12
		First choice	NDJ	30 - 60	0.05 - 0.13	0.05 - 0.15	0.05-0.15
H	Hardened steel ≥ 40HRC	For low feed machines	NDL	40 - 100	0.03 - 0.08	0.03 - 0.08	0.03-0.08
		First choice	NDJ	50 - 100	0.04 - 0.08	0.04 - 0.1	0.04-0.1

Cutting parameters shown here are relating to the basic recommendations for cutting materials given.
Cutting conditions, material hardness and other relevant variables must be taken into considerations to determine the actual cutting parameters.

FINE-BEAM

ø25 mm - ø89 mm

FINE-BEAM STS

FINE-BEAM STS-EX

Direct mount indexable head with external 4-start thread for single tube system (STS), tool diameter: ø25 - ø89 mm

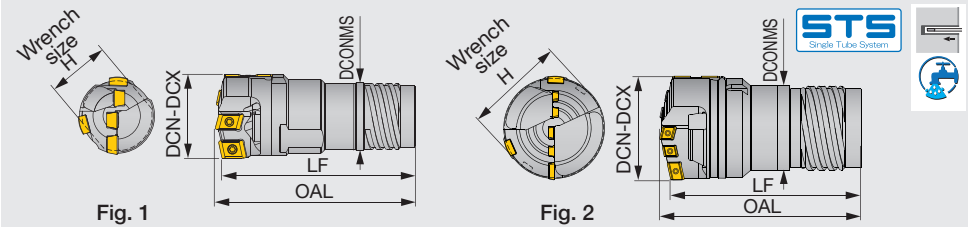

Standard products

Designation	DC	Drill tube		Drill head				Fig.
		Designation	Dia. (mm)	OAL	LF	DCONMS	H	
FNBM-02S-25.00	25.00	ST02	22	73	70	19.5	22	1
FNBM-02S-25.40	25.40	ST02	22	73	70	19.5	22	1
FNBM-03S-28.00	28.00	ST03	24	73	70	21	23	1
FNBM-04S-29.00	29.00	ST04	26	78	75	23.5	24	1
FNBM-04S-30.00	30.00	ST04	26	78	75	23.5	24	1
FNBM-05S-31.75	31.75	ST05	28	78	75	25.5	27	1
FNBM-05S-32.00	32.00	ST05	28	78	75	25.5	27	1
FNBM-05S-33.00	33.00	ST05	28	78	75	25.5	27	1
FNBM-06S-35.00	35.00	ST06	30	83	80	28	29	1
FNBM-06S-36.00	36.00	ST06	30	83	80	28	29	1
FNBM-07S-37.00	37.00	ST07	33	93	90	30	32	1
FNBM-07S-38.00	38.00	ST07	33	93	90	30	32	1
FNBM-07S-38.10	38.10	ST07	33	93	90	30	32	1
FNBM-08S-40.00	40.00	ST08	36	99	95	33	35	1
FNBM-09S-45.00	45.00	ST09	39	104	100	36	38	1
FNBM-10S-50.00	50.00	ST10	43	104	100	39	41	1
FNBM-11S-55.00	55.00	ST11	47	114	110	43	46	1
FNBM-12S-57.15	57.15	ST12	51	120	115	47	50	1
FNBM-12S-60.00	60.00	ST12	51	120	115	47	50	1
FNBM-13S-65.00	65.00	ST13	56	120	115	51	55	1

Non-standard products (to be supplied on request)

When ordering

FNBM-**S	-	xx.xx
Drill head		Diameter (mm)

e.g. Designation for tool diameter ø30.5 mm: **FNBM-04S-30.50**

Designation	DCN	DCX	Drill tube		Drill head				Fig.
			Designation	Dia. (mm)	OAL	LF	DCONMS	H	
FNBM-02S-xx.xx	25.00	26.40	ST02	22	73	70	19.5	22	1
FNBM-03S-xx.xx	26.41	28.70	ST03	24	73	70	21	23	1
FNBM-04S-xx.xx	28.71	31.00	ST04	26	78	75	23.5	24	1
FNBM-05S-xx.xx	31.01	33.30	ST05	28	78	75	25.5	27	1
FNBM-06S-xx.xx	33.31	36.20	ST06	30	83	80	28	29	1
FNBM-07S-xx.xx	36.21	39.60	ST07	33	93	90	30	32	1
FNBM-08S-xx.xx	39.61	43.00	ST08	36	99	95	33	35	1
FNBM-09S-xx.xx	43.01	47.00	ST09	39	104	100	36	38	1
FNBM-10S-xx.xx	47.01	51.70	ST10	43	104	100	39	41	1
FNBM-11S-xx.xx	51.71	56.20	ST11	47	114	110	43	46	1
FNBM-12S-xx.xx	56.21	60.60	ST12	51	120	115	47	50	1
FNBM-13S-xx.xx	60.61	65.00	ST13	56	120	115	51	55	1
FNBM-14S-xx.xx	65.01	66.99	ST14	56	149	141	52	63	2
FNBM-15S-xx.xx	67.00	72.99	ST15	62	149	141	58	69	2
FNBM-16S-xx.xx	73.00	79.99	ST16	68	150	141	63	76	2
FNBM-17S-xx.xx	80.00	86.99	ST17	75	173	164	70	83	2
FNBM-18S-xx.xx	87.00	89.00	ST18	82	173	164	77	86	2

Reference pages: Spare parts → 023, Inserts → 025 - 027, Guide pads → 029, Standard cutting conditions → 030, Drill tube (STS) → 087

FINE-BEAM STS

FINE-BEAM STS-IN

Direct mount indexable head with internal single-start thread for single tube system (STS), tool diameter: ø25 - ø89 mm

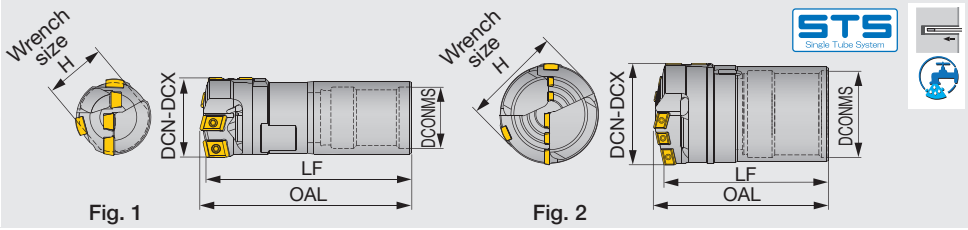

Standard products

Designation	DC	Drill tube		Drill head				Fig.
		Designation	Dia. (mm)	OAL	LF	DCONMS	H	
FNBM-22N-25.00	25.00	UB22	22	73	70	20	19	1
FNBM-26N-30.00	30.00	UB26	26	78	75	24	24	1
FNBM-28N-32.00	32.00	UB28	28	78	75	26	26	1
FNBM-30N-35.00	35.00	UB30	30	93	90	27	28	1
FNBM-36N-40.00	40.00	UB36	36	104	100	33	32	1

Non-standard products (to be supplied on request)

When ordering

FNBM-**N	-	xx.xx
Drill head		Diameter (mm)

e.g. Designation for tool diameter ø30.5 mm: **FNBM-26N-30.50**

Designation	DCN	DCX	Drill tube		Drill head				Fig.
			Designation	Dia. (mm)	OAL	LF	DCONMS	H	
FNBM-22N-xx.xx	25.00	26.99	UB22	22	73	70	20	19	1
FNBM-24N-xx.xx	27.00	28.70	UB24	24	73	70	22	21	1
FNBM-24N-xx.xx	28.71	29.99	UB24	24	73	70	22	24	1
FNBM-26N-xx.xx	30.00	31.99	UB26	26	78	75	24	24	1
FNBM-28N-xx.xx	32.00	33.99	UB28	28	78	75	26	26	1
FNBM-30N-xx.xx	34.00	36.99	UB30	30	93	90	27	28	1
FNBM-33N-xx.xx	37.00	39.99	UB33	33	98	95	30	30	1
FNBM-36N-xx.xx	40.00	43.00	UB36	36	104	100	33	32	1
FNBM-36N-xx.xx	43.01	43.99	UB36	36	104	100	33	36	1
FNBM-39N-xx.xx	44.00	46.99	UB39	39	109	105	37	36	1
FNBM-43N-xx.xx	47.00	51.70	UB43	43	109	105	41	36	1
FNBM-43N-xx.xx	51.71	51.99	UB43	43	109	105	41	41	1
FNBM-47N-xx.xx	52.00	56.99	UB47	47	114	110	44	46	1
FNBM-51N-xx.xx	57.00	60.60	UB51	51	120	115	49	46	1
FNBM-51N-xx.xx	60.61	60.99	UB51	51	120	115	49	50	1
FNBM-56N-xx.xx	61.00	65.00	UB56	56	120	115	53	54	1
FNBM-56N-xx.xx	65.01	67.99	UB56	56	112	104	53	64	2
FNBM-62N-xx.xx	68.00	74.99	UB62	62	113	104	59	71	2
FNBM-68N-xx.xx	75.00	80.99	UB68	68	143	134	65	77	2
FNBM-75N-xx.xx	81.00	89.00	UB75	75	143	134	71	86	2

Reference pages: Spare parts → 023, Inserts → 025 - 027, Guide pads → 029, Standard cutting conditions → 030, Drill tube (STS) → 089

FINE-BEAM DTS

FINE-BEAM DTS-EX

Direct mount indexable head with external 4-start thread for double tube system (DTS), tool diameter: ø25 - ø65 mm

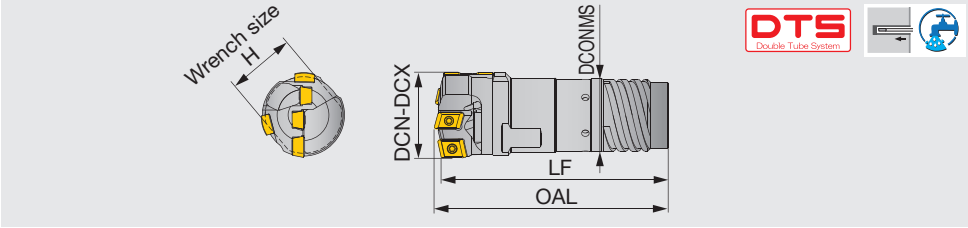

Standard products

Designation	DC	Drill tube		Drill head			
		Designation	Dia. (mm)	OAL	LF	DCONMS	H
FNBM-11D-50.00	50.00	OT11	46.5	114	110	43	41

Non-standard products (to be supplied on request)

When ordering

FNBM-**D	-	xx.xx
Drill head		Diameter (mm)

e.g. Designation for tool diameter ø30.5 mm: **FNBM-05D-30.50**

Designation	DCN	DCX	Outer tube		Drill head			
			Designation	Dia. (mm)	OAL	LF	DCONMS	H
FNBM-03D-xx.xx	25.00	26.40	OT03	23.5	73	70	21	22
FNBM-04D-xx.xx	26.41	28.70	OT04	26	78	75	23.5	23
FNBM-05D-xx.xx	28.71	31.00	OT05	28	78	75	25.5	24
FNBM-06D-xx.xx	31.01	33.30	OT06	30.5	83	80	28	27
FNBM-07D-xx.xx	33.31	36.20	OT07	33	93	90	30	29
FNBM-08D-xx.xx	36.21	39.60	OT08	35.5	99	95	33	32
FNBM-09D-xx.xx	39.61	43.00	OT09	39	104	100	36	35
FNBM-10D-xx.xx	43.01	47.00	OT10	42.5	104	100	39	38
FNBM-11D-xx.xx	47.01	51.70	OT11	46.5	114	110	43	41
FNBM-12D-xx.xx	51.71	56.20	OT12	51	120	115	47	46
FNBM-13D-xx.xx	56.21	60.99	OT13	55.5	120	115	51	50
FNBM-13D-xx.xx	61.00	65.00	OT13	55.5	120	115	51	55

Reference pages: Spare parts → 023, Inserts → 025 - 027, Guide pads → 029, Standard cutting conditions → 030, Drill tube (STS) → 091

SPARE PARTS

Tool diameter DCN - DCX (mm)	Insert									Guide pad		
	① Peripheral			② Intermediate			③ Central			④		
	Insert	Screw*	Wrench	Insert	Screw*	Wrench	Insert	Screw*	Wrench	Guide pad	Screw	Wrench
25.00 - 28.00	FBH0603**R-**-P	CSTB-2.2	T-7F	FBM060304R-**-I	CSTB-2.2	T-7F	FBM060308L-**-C	CSTB-2.2	T-7F	GP06	CSTB-2.2S	T-7F
28.01 - 29.99	FBH0603**R-**-P	CSTB-2.2	T-7F	FBM060304R-**-I	CSTB-2.2	T-7F	FBM070408L-**-C	SR14-560-HG	T-8F	GP06	CSTB-2.2S	T-7F
30.00 - 35.00	FBH0804**R-**-P	SR14-560-HG	T-8F	FBM070404R-**-I	SR14-560-HG	T-8F	FBM070408L-**-C	SR14-560-HG	T-8F	GP07	CSTB-3S	T-9F
35.01 - 38.00	FBH0804**R-**-P	SR14-560-HG	T-8F	FBM070404R-**-I	SR14-560-HG	T-8F	FBM080408L-**-C	SR14-560-HG	T-8F	GP07	CSTB-3S	T-9F
38.01 - 39.00	FBH0904**R-**-P	SR14-560-HG	T-8F	FBM070404R-**-I	SR14-560-HG	T-8F	FBM080408L-**-C	SR14-560-HG	T-8F	GP07	CSTB-3S	T-9F
39.01 - 41.00	FBH0904**R-**-P	SR14-560-HG	T-8F	FBM070404R-**-I	SR14-560-HG	T-8F	FBM080408L-**-C	SR14-560-HG	T-8F	GP08	CSTB-3S	T-9F
41.01 - 44.00	FBH0904**R-**-P	SR14-560-HG	T-8F	FBM080404R-**-I	SR14-560-HG	T-8F	FBM080408L-**-C	SR14-560-HG	T-8F	GP08	CSTB-3S	T-9F
44.01 - 45.00	FBH0904**R-**-P	SR14-560-HG	T-8F	FBM080404R-**-I	SR14-560-HG	T-8F	FBM100408L-**-C	SR14-560-HG	T-8F	GP08	CSTB-3S	T-9F
45.01 - 47.00	FBH0904**R-**-P	SR14-560-HG	T-8F	FBM080404R-**-I	SR14-560-HG	T-8F	FBM100408L-**-C	SR14-560-HG	T-8F	GP10S	CSTB-3.5	T-15F
47.01 - 51.00	FBH1104**R-**-P	SR14-560-HG	T-8F	FBM080404R-**-I	SR14-560-HG	T-8F	FBM100408L-**-C	SR14-560-HG	T-8F	GP10S	CSTB-3.5	T-15F
51.01 - 54.00	FBH1104**R-**-P	SR14-560-HG	T-8F	FBM100404R-**-I	SR14-560-HG	T-8F	FBM100408L-**-C	SR14-560-HG	T-8F	GP10S	CSTB-3.5	T-15F
54.01 - 57.00	FBH1104**R-**-P	SR14-560-HG	T-8F	FBM100404R-**-I	SR14-560-HG	T-8F	FBM130408L-**-C	SR14-560-HG	T-8F	GP10S	CSTB-3.5	T-15F
57.01 - 60.00	FBH1104**R-**-P	SR14-560-HG	T-8F	FBM100404R-**-I	SR14-560-HG	T-8F	FBM130408L-**-C	SR14-560-HG	T-8F	GP12	CSTB-3.5	T-15F
60.01 - 64.00	FBH1304**R-**-P	SR14-560-HG	T-8F	FBM100404R-**-I	SR14-560-HG	T-8F	FBM130408L-**-C	SR14-560-HG	T-8F	GP12	CSTB-3.5	T-15F
64.01 - 65.00	FBH1304**R-**-P	SR14-560-HG	T-8F	FBM130404R-**-I	SR14-560-HG	T-8F	FBM130408L-**-C	SR14-560-HG	T-8F	GP12	CSTB-3.5	T-15F

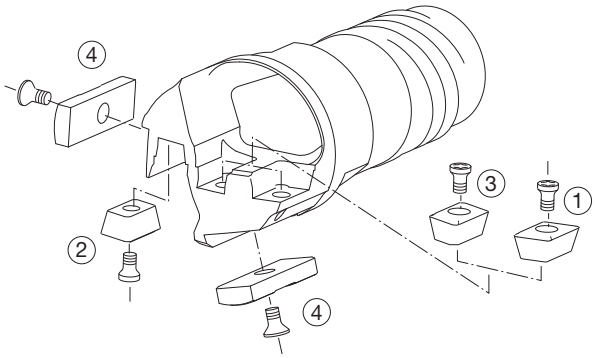

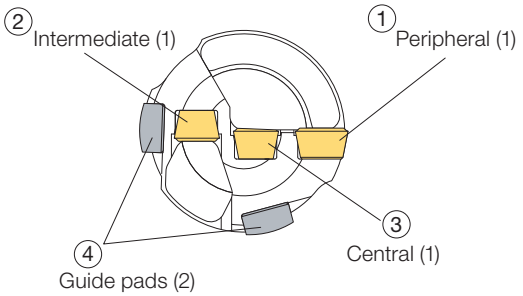

Tool diameter DCN - DCX (mm)	Insert															Guide pad		
	① Peripheral			② Intermediate			③ Intermediate			④ Intermediate			⑤ Central			⑥		
	Insert	Screw*	Wrench	Insert	Screw*	Wrench	Insert	Screw*	Wrench	Insert	Screw*	Wrench	Insert	Screw*	Wrench	Guide pad	Screw	Wrench
65.01 - 71.00	FBH1104**R-**-P	SR 14-560-HG	T-8F	FBM070404R-**-I	SR 14-560-HG	T-8F	FBM080404R-**-I	SR 14-560-HG	T-8F	FBM080404R-**-I	SR 14-560-HG	T-8F	FBM100408L-**-C	SR 14-560-HG	T-8F	GP12	CSTB-3.5	T-15F
71.01 - 83.00	FBH1304**R-**-P	SR 14-560-HG	T-8F	FBM080404R-**-I	SR 14-560-HG	T-8F	FBM080404R-**-I	SR 14-560-HG	T-8F	FBM080404R-**-I	SR 14-560-HG	T-8F	FBM100408L-**-C	SR 14-560-HG	T-8F	GP12	CSTB-3.5	T-15F
83.01 - 89.00	FBH1304**R-**-P	SR 14-560-HG	T-8F	FBM080404R-**-I	SR 14-560-HG	T-8F	FBM100404R-**-I	SR 14-560-HG	T-8F	FBM080404R-**-I	SR 14-560-HG	T-8F	FBM130408L-**-C	SR 14-560-HG	T-8F	GP12	CSTB-3.5	T-15F

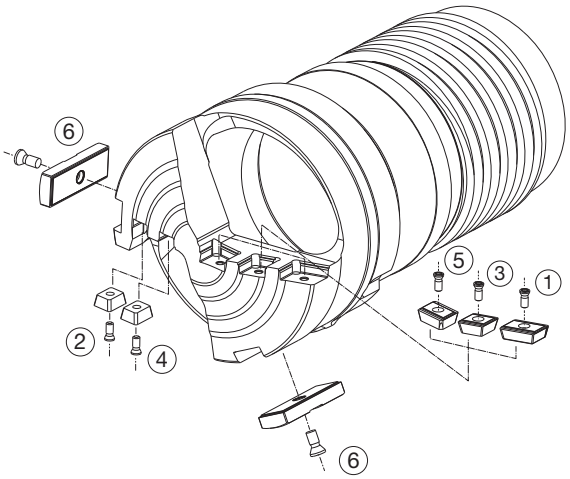

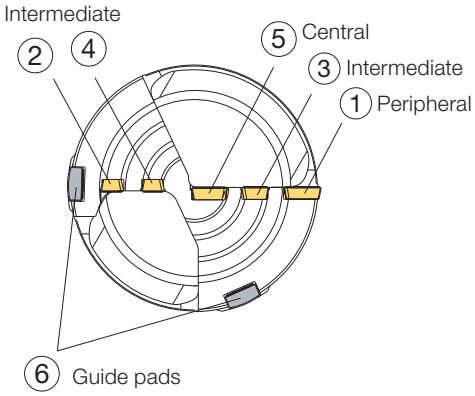

*See page 021 on size variation of the insert clamping screws.
Drill heads come with clamping screws and wrenches but do not include inserts and guide pads. Please purchase inserts and guide pads separately.
Recommended clamping torque: CSTB-2.2/CSTB-2.2S = 1 N·m, SR14-560-HG = 1.2 N·m, CSTB-2.5 = 1.3 N·m, CSTB-3S = 2.3 N·m, CSTB-3.5 = 3.5 N·m

Caution

To improve its performance, the FineBeam drill head has undergone design changes. The new drill head has a **guide pad protector**, as shown below, that protects the guide pad from being damaged when retrieving the drill from the hole into the guide bushing after completing machining. Accordingly, the insert clamping screw design for drill head diameters of 30 mm or greater has also been changed. See the list below for details.

When ordering insert clamping screws, below before choosing the screw size, first confirm the drill body design according to the procedure shown.

→ If the drill head has the protector: **Use a screw in the new design**

→ If the drill head has NO protector: **Use a screw in the previous design**

New design

With guide pad protector

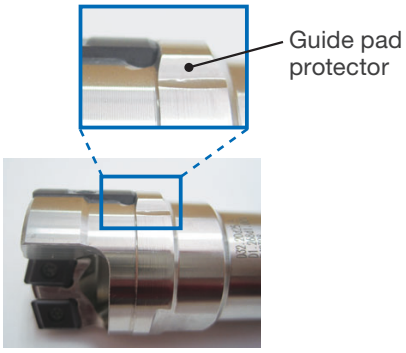

Conventional design

Without guide pad protector

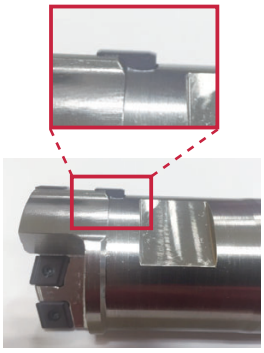

Tool diameter DCN - DCX (mm)	Peripheral insert		Intermediate insert		Central insert	
	Screw		Screw		Screw	
	New	Conventional	**New**	Conventional	**New**	Conventional
25.00-28.00	CSTB-2.2	CSTB-2.2	CSTB-2.2	CSTB-2.2	CSTB-2.2	CSTB-2.2
28.01-29.99	CSTB-2.2	CSTB-2.2	CSTB-2.2	CSTB-2.2	**SR14-560-HG**	CSTB2.5
30.00-35.00	**SR14-560-HG**	CSTB2.5	**SR14-560-HG**	CSTB2.5	**SR14-560-HG**	CSTB2.5
35.01-38.00	**SR14-560-HG**	CSTB2.5	**SR14-560-HG**	CSTB2.5	**SR14-560-HG**	CSTB2.5
38.01-39.00	**SR14-560-HG**	CSTB2.5	**SR14-560-HG**	CSTB2.5	**SR14-560-HG**	CSTB2.5
39.01-41.00	**SR14-560-HG**	CSTB2.5	**SR14-560-HG**	CSTB2.5	**SR14-560-HG**	CSTB2.5
41.01-44.00	**SR14-560-HG**	CSTB2.5	**SR14-560-HG**	CSTB2.5	**SR14-560-HG**	CSTB2.5
44.01-45.00	**SR14-560-HG**	CSTB2.5	**SR14-560-HG**	CSTB2.5	**SR14-560-HG**	CSTB2.5
45.01-47.00	**SR14-560-HG**	CSTB2.5	**SR14-560-HG**	CSTB2.5	**SR14-560-HG**	CSTB2.5
47.01-51.00	**SR14-560-HG**	CSTB2.5	**SR14-560-HG**	CSTB2.5	**SR14-560-HG**	CSTB2.5
51.01-54.00	**SR14-560-HG**	CSTB2.5	**SR14-560-HG**	CSTB2.5	**SR14-560-HG**	CSTB2.5
54.01-57.00	**SR14-560-HG**	CSTB2.5	**SR14-560-HG**	CSTB2.5	**SR14-560-HG**	CSTB2.5
57.01-60.00	**SR14-560-HG**	CSTB2.5	**SR14-560-HG**	CSTB2.5	**SR14-560-HG**	CSTB2.5
60.01-64.00	**SR14-560-HG**	CSTB2.5	**SR14-560-HG**	CSTB2.5	**SR14-560-HG**	CSTB2.5
64.01-65.00	**SR14-560-HG**	CSTB2.5	**SR14-560-HG**	CSTB2.5	**SR14-560-HG**	CSTB2.5

The two types of screws are not interchangeable. A wrong screw will not fit the drill head body. Please contact your dealer for further information.

INSERT

FBM L-G-C(Central insert for general purpose)

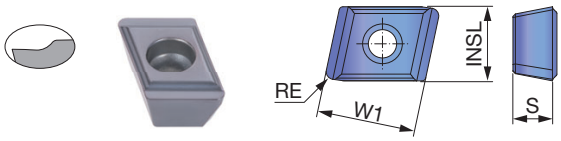

P	Steel	★	☆
M	Stainless	★	☆
K	Cast iron	★	☆
N	Non-ferrous	★	☆
S	Superalloys	☆	★
H	Hard materials	☆	★

★ : First choice
☆ : Second choice

Designation	INSL	S	Coated AH9130	Coated AH8015	Coated AH725	W1	RE
FBM060308L-G-C	5.5	3	●	●	●	8	0.8
FBM070408L-G-C	6.5	4	●	●	●	10	0.8
FBM080408L-G-C	8	4	●	●	●	10	0.8
FBM100408L-G-C	9.5	4	●	●	●	10	0.8
FBM130408L-G-C	12.5	4	●	●	●	10	0.8

●: New
●: Line up

FBM L-HF-C (Central insert for high feed rates)

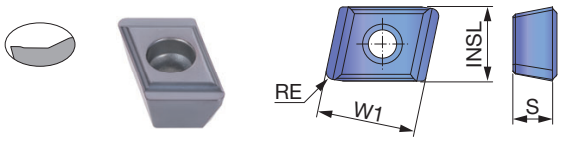

P	Steel	★	☆
M	Stainless	★	☆
K	Cast iron	★	☆
N	Non-ferrous	★	☆
S	Superalloys	☆	★
H	Hard materials	☆	★

★ : First choice
☆ : Second choice

Designation	INSL	S	Coated AH9130	Coated AH8015	Coated AH725	W1	RE
FBM060308L-HF-C	5.5	3	●	●	●	8	0.8
FBM070408L-HF-C	6.5	4	●	●	●	10	0.8
FBM080408L-HF-C	8	4	●	●	●	10	0.8
FBM100408L-HF-C	9.5	4	●	●	●	10	0.8
FBM130408L-HF-C	12.5	4	●	●	●	10	0.8

●: New
●: Line up

FBM R-G-I (Intermediate insert for gerenal purpose)

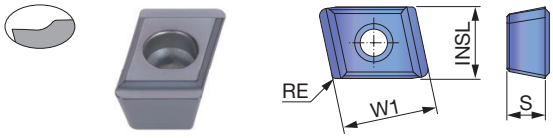

P	Steel	★	☆	
M	Stainless	★	☆	
K	Cast iron	★	☆	
N	Non-ferrous	★	☆	
S	Superalloys	☆	★	
H	Hard materials	☆	★	

★ : First choice
☆ : Second choice

Designation	INSL	S	Coated AH9130	AH8015	AH725	W1	RE
FBM060304R-G-I	5.5	3	●	●	●	8	0.4
FBM070404R-G-I	6.5	4	●	●	●	10	0.4
FBM080404R-G-I	8	4	●	●	●	10	0.4
FBM100404R-G-I	9.5	4	●	●	●	10	0.4
FBM130404R-G-I	12.5	4	●	●	●	10	0.4

●: New
●: Line up

FBM R-HF-I (Intermediate insert for high feed rates)

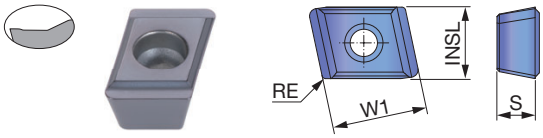

P	Steel	★	☆	
M	Stainless	★	☆	
K	Cast iron	★	☆	
N	Non-ferrous	★	☆	
S	Superalloys	☆	★	
H	Hard materials	☆	★	

★ : First choice
☆ : Second choice

Designation	INSL	S	Coated AH9130	AH8015	AH725	W1	RE
FBM060304R-HF-I	5.5	3	●	●	●	8	0.4
FBM070404R-HF-I	6.5	4	●	●	●	10	0.4
FBM080404R-HF-I	8	4	●	●	●	10	0.4
FBM100404R-HF-I	9.5	4	●	●	●	10	0.4
FBM130404R-HF-I	12.5	4	●	●	●	10	0.4

●: New
●: Line up

FBM R-DL-I (Intermediate insert for low power machine)

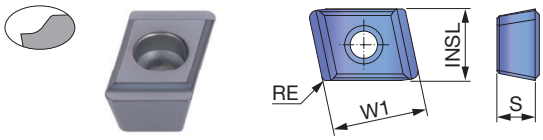

P	Steel	★	☆	
M	Stainless	★	☆	
K	Cast iron	★	☆	
N	Non-ferrous	★	☆	
S	Superalloys	☆	★	
H	Hard materials	☆	★	

★ : First choice
☆ : Second choice

Designation	INSL	S	Coated AH9130	AH8015	AH725	W1	RE
FBM060304R-DL-I	5.5	3	●			8	0.4
FBM070404R-DL-I	6.5	4	●			10	0.4

●: New
●: Line up

FBH R-G-P (Peripheral insert for general purpose)

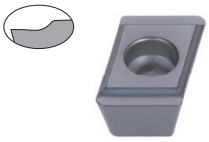

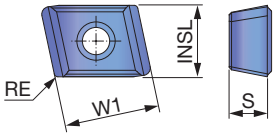

P	Steel	★	☆	
M	Stainless	★	☆	
K	Cast iron	★	☆	
N	Non-ferrous	★	☆	
S	Superalloys		★	
H	Hard materials	☆	★	

★ : First choice
☆ : Second choice

Designation	INSL	S	Coated AH9130	AH8015	AH725	W1	RE
FBH060304R-G-P	6	3			●	8	0.4
FBH060308R-G-P	6	3	●	●	●	8	0.8
FBH080404R-G-P	7.5	4			●	10	0.4
FBH080408R-G-P	7.5	4	●	●	●	10	0.8
FBH090404R-G-P	9	4			●	10	0.4
FBH090408R-G-P	9	4	●	●	●	10	0.8
FBH110404R-G-P	11	4			●	10	0.4
FBH110408R-G-P	11	4	●	●	●	10	0.8
FBH130404R-G-P	13	4			●	10	0.4
FBH130408R-G-P	13	4	●	●	●	10	0.8

●: New
●: Line up

FBH R-G-P (Peripheral insert for general purpose)

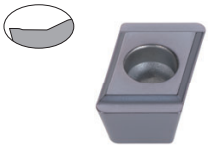

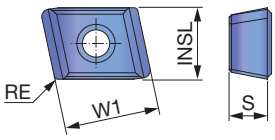

P	Steel	★	☆	
M	Stainless	★	☆	
K	Cast iron	★	☆	
N	Non-ferrous	★	☆	
S	Superalloys		★	
H	Hard materials	☆	★	

★ : First choice
☆ : Second choice

Designation	INSL	S	Coated AH9130	AH8015	AH725	W1	RE
FBH060308R-HF-P	6	3	●	●	●	8	0.8
FBH080408R-HF-P	7.5	4	●	●	●	10	0.8
FBH090408R-HF-P	9	4	●	●	●	10	0.8
FBH110408R-HF-P	11	4	●	●	●	10	0.8
FBH130408R-HF-P	13	4	●	●	●	10	0.8

●: New
●: Line up

RECOMMENDED INSERT

ISO	Workpiece material	Hardness	First choice	Troubleshooting	
				Chipping resistance	Wear resistance
P	Low carbon steels (C ≤ 0.3%)	- 200 HB	G, AH9130	G, AH8015	G, AH725
	Carbon steels (C > 0.3%) Alloy steels	- 300 HB	G, AH9130	G, AH8015	G, AH725
	Low alloy steels	- 300 HB	G, AH9130	G, AH8015	G, AH725
	Alloy steels	- 300 HB	G, AH9130	G, AH8015	G, AH725
M	Stainless steel	- 200 HB	G, AH9130	G, AH8015	G, AH725
K	Grey cast irons	150 - 250 HB	G, AH9130	G, AH8015	G, AH725
	Ductile cast irons	150 - 250 HB	G, AH9130	G, AH8015	G, AH725
N	Aluminium alloy	-	G, AH9130	G, AH8015	G, AH725
S	Titanium alloys Heat-resistant alloys	- 40 HRC	G, AH8015	G, AH9130	G, AH9130
H	Hardened steel	- 50 HRC	G, AH8015	G, AH9130	G, AH9130

GUIDE PAD

GP-DC

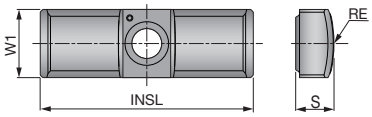

Double chamfer

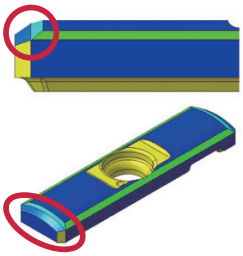

| Designation | W1 | INSL | Coated | | |

STANDARD CUTTING CONDITIONS

ISO	Workpiece materials				Hard-ness (HB)	Chip-breaker	Cutting speed Vc (m/min)	Feed : f (mm/rev) ø25.00 - ø43.00	Feed : f (mm/rev) ø43.01 - ø89.00
P	Carbon steel Casting steel High carbon steel Carbon tool steel	S10C - S25C, SS	0.10 - 0.25%C	Non-hardened	125	HF	70 - 130	0.11 - 0.41	0.14 - 0.45
					125	G	70 - 130	0.1 - 0.3	0.12 - 0.35
		S25C - S55C	0.25 - 0.25%C	Non-hardened	190	HF	70 - 130	0.11 - 0.41	0.14 - 0.45
					190	G	70 - 130	0.1 - 0.3	0.12 - 0.35
			0.25 - 0.25%C	Hardened and tempered	250	HF	70 - 130	0.11 - 0.41	0.14 - 0.45
					250	G	70 - 130	0.1 - 0.3	0.12 - 0.35
		SK	0.55 - 0.80%C	Non-hardened	220	HF	70 - 130	0.11 - 0.41	0.14 - 0.45
					220	G	70 - 130	0.1 - 0.3	0.12 - 0.35
			0.55 - 0.80%C	Hardened and tempered	300	HF	70 - 130	0.11 - 0.41	0.14 - 0.45
					300	G	70 - 130	0.1 - 0.3	0.12 - 0.35
	Low alloy steel Casting steel (alloying element < 5%)	SNC,DCr,SNCN SCM,SMn		Non-hardened	200	HF	70 - 120	0.11 - 0.41	0.20 - 0.45
					200	G	70 - 120	0.1 - 0.3	0.12 - 0.35
				Hardened and tempered	275	HF	55 - 110	0.11 - 0.41	0.20 - 0.45
					275	G	60 - 120	0.1 - 0.3	0.12 - 0.35
					300	HF	55 - 110	0.11 - 0.41	0.20 - 0.45
					300	G	60 - 120	0.1 - 0.3	0.12 - 0.35
					350	HF	55 - 110	0.11 - 0.41	0.20 - 0.45
					350	G	60 - 120	0.1 - 0.3	0.12 - 0.35
	High alloy steel Casting steel Tool steel	SNS,SKD,SKT SKH,SK		Non-hardened	200	HF	55 - 110	0.11 - 0.38	0.20 - 0.40
					200	G	70 - 130	0.1 - 0.3	0.12 - 0.35
				Hardened and tempered	325	HF	55 - 110	0.11 - 0.38	0.20 - 0.40
					325	G	70 - 130	0.1 - 0.3	0.12 - 0.35
M	Stainless steel	SUS430		Ferritic	200	HF	40 - 110	0.11 - 0.41	0.20 - 0.45
					200	G	70 - 130	0.1 - 0.3	0.12 - 0.35
		SUS410, 420J		Martensite	240	HF	40 - 110	0.11 - 0.41	0.20 - 0.45
					240	G	70 - 130	0.1 - 0.3	0.12 - 0.35
		SUS304, SUS316L		Austenite	180	HF	40 - 110	0.11 - 0.41	0.20 - 0.45
					180	G	70 - 130	0.1 - 0.3	0.12 - 0.35
K	Ductile cast iron	FCD400 - FCD450		Ferritic / Pearlitic	180	HF	50 - 110	0.11 - 0.38	0.24 - 0.41
					180	G	50 - 110	0.1 - 0.25	0.12 - 0.35
		FCD500 - FCD700		Pearlitic	260	HF	50 - 110	0.11 - 0.38	0.24 - 0.41
					260	G	50 - 110	0.1 - 0.25	0.12 - 0.35
	Grey cast iron	FC100 - FC200		Low tensile strength	160	HF	60 - 110	0.11 - 0.38	0.24 - 0.41
					160	G	60 - 110	0.1 - 0.25	0.12 - 0.35
		FC250 - FC350		High tensile strength	250	HF	60 - 110	0.11 - 0.38	0.24 - 0.41
					250	G	60 - 110	0.1 - 0.25	0.12 - 0.35
	Malleable cast iron	FCMB, FCMW		Ferritic	130	HF	80 - 120	0.11 - 0.38	0.24 - 0.41
					130	G	70 - 110	0.1 - 0.25	0.12 - 0.35
		FCMWP, FCMP		Pearlitic	230	HF	80 - 120	0.11 - 0.38	0.24 - 0.41
					230	G	70 - 110	0.1 - 0.25	0.12 - 0.35
N	Aluminium alloys Forging			Non-aged	60	HF	65 - 150	0.09 - 0.33	0.24 - 0.35
					60	G	65 - 130	0.1 - 0.25	0.12 - 0.35
				Soluted, Aged	100	HF	65 - 150	0.09 - 0.33	0.24 - 0.35
					100	G	65 - 130	0.08 - 0.23	0.12 - 0.27
	Aluminium alloys Casting		≤12% Si	Non-aged	75	HF	65 - 150	0.09 - 0.33	0.24 - 0.35
					75	G	65 - 130	0.08 - 0.23	0.12 - 0.27
				Soluted, Aged	90	HF	65 - 150	0.09 - 0.33	0.24 - 0.35
					90	G	65 - 130	0.08 - 0.23	0.12 - 0.27
			>12% Si	High silicon	130	HF	65 - 150	0.09 - 0.33	0.24 - 0.35
					130	G	65 - 130	0.08 - 0.23	0.12 - 0.27
	Copper alloys		>1% Pb	Free cutting copper	110	HF	65 - 150	0.09 - 0.33	0.24 - 0.35
					110	G	65 - 130	0.08 - 0.23	0.12 - 0.27
				Brass, Red brass	90	HF	65 - 150	0.09 - 0.33	0.24 - 0.35
					90	G	65 - 130	0.08 - 0.23	0.12 - 0.27
				Electrolytic copper	100	HF	65 - 150	0.09 - 0.33	0.24 - 0.35
					100	G	65 - 130	0.08 - 0.23	0.12 - 0.27
S	Nickel-based alloys		Fe base	Non-aged	200	HF	20 - 55	0.09 - 0.30	0.20 - 0.33
					200	G	20 - 50	0.08 - 0.23	0.12 - 0.27
				Soluted, Aged	280	HF	20 - 55	0.09 - 0.30	0.20 - 0.33
					280	G	20 - 50	0.08 - 0.23	0.12 - 0.27
			Ni / Co base	Non-aged	250	HF	20 - 55	0.09 - 0.30	0.20 - 0.33
					250	G	20 - 50	0.08 - 0.23	0.12 - 0.27
				Soluted, Aged	350	HF	20 - 55	0.09 - 0.30	0.20 - 0.33
					350	G	20 - 50	0.08 - 0.23	0.12 - 0.27
				Casted	320	HF	20 - 55	0.09 - 0.30	0.20 - 0.33
					320	G	20 - 50	0.08 - 0.23	0.12 - 0.27
	Titanium alloys		α		Rm400	HF	30 - 60	0.09 - 0.30	0.20 - 0.33
					Rm400	G	30 - 60	0.08 - 0.23	0.12 - 0.27
			α-β		Rm1050	HF	30 - 60	0.09 - 0.30	0.20 - 0.33
					Rm1050	G	30 - 60	0.08 - 0.23	0.12 - 0.27
H	Hardened steel	≥ 40HRC				HF	30 - 60	0.09 - 0.30	0.20 - 0.33
						G	30 - 60	0.08 - 0.23	0.12 - 0.27

Cutting parameters shown here are relating to the basic recommendations for cutting materials given.
Cutting conditions, material hardness and other relevant variables must be taken into considerations to determine the actual cutting parameters.

UNIDEX

ø38 mm - ø293.99 mm

UNIDEX STS

UNIDEX STS-EX

Indexable drill head with external 4-start thread for single tube system (STS), diameters adjustable, tool diameter ø38.00 - ø106.99 mm, CICT = 3

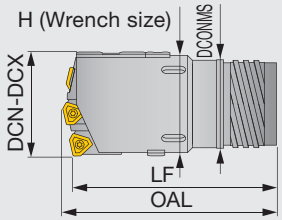

Standard products

Designation	DC	CICT	Drill tube		Drill head			
			Designation	Dia. (mm)	OAL	LF	DCONMS	H
KUSTS17E-80.00	80.00	3	ST17	75	191	180	70	83
KUSTS18E-90.00	90.00	3	ST18	82	193	180	77	96
KUSTS19E-100.00	100.00	3	ST19	94	193	180	89	102

Non-standard products (to be supplied on request)

When ordering

KUSTS**E	-	xx.xx
Drill head		Diameter (mm)

e.g. Designation for tool diameter ø60 mm: **KUSTS12E-60.00**

Designation	DCN	DCX	CICT	Drill tube		Drill head			
				Designation	Dia. (mm)	OAL	LF	DCONMS	H
KUSTS07E-xx.xx	38.00	39.60	3	ST07	33	90	85	30	37
KUSTS08E-xx.xx	39.61	43.00	3	ST08	36	91	85	33	40
KUSTS09E-xx.xx	43.01	47.00	3	ST09	39	101	95	36	43
KUSTS10E-xx.xx	47.01	51.70	3	ST10	43	102	95	39	48
KUSTS11E-xx.xx	51.71	56.20	3	ST11	47	107	100	43	52
KUSTS12E-xx.xx	56.21	60.60	3	ST12	51	118	110	47	57
KUSTS13E-xx.xx	60.61	65.00	3	ST13	56	119	110	51	61
KUSTS14E-xx.xx	65.00	66.99	3	ST14	56	159	150	52	63
KUSTS15E-xx.xx	67.00	72.99	3	ST15	62	159	150	58	69
KUSTS16E-xx.xx	73.00	79.99	3	ST16	68	160	150	63	76
KUSTS17E-xx.xx	80.00	86.99	3	ST17	75	191	180	70	83
KUSTS18E-xx.xx	87.00	99.99	3	ST18	82	193	180	77	96
KUSTS19E-xx.xx	100.00	106.99	3	ST19	94	193	180	89	102

For drill heads in diameters of ø92 mm or larger, a filler is attached in place of guide pad.
Before drilling operation, please adjust drill diameter. For diameter adjustment please see page 056.

Reference pages: Screws, Wrenches → 034, Inserts → 033, 049 - 050, Guide pad → 052, Standard cutting conditions → 053, Drill tube (STS) → 087

UNIDEX STS

UNIDEX STS-IN

Indexable drill head with internal single-start thread for single tube system (STS), diameters adjustable, tool diameter ø38.00 - ø106.99 mm, CICT = 3

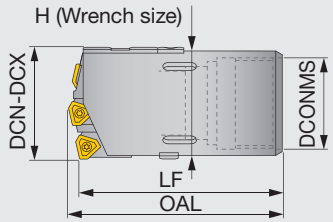

Non-standard products (to be supplied on request)

When ordering

KUSTS**	-	xx.xx
Drill head		Diameter (mm)

e.g. Designation for tool diameter ø60 mm: **KUSTS51-60.00**

Designation	DCN	DCX	CICT	Drill tube		Drill head			
				Designation	Dia. (mm)	OAL	LF	DCONMS	H
KUSTS33-xx.xx	38.00	39.99	3	UB33	33	85	80	30	37
KUSTS36-xx.xx	40.00	43.99	3	UB36	36	86	80	33	41
KUSTS39-xx.xx	44.00	46.99	3	UB39	39	96	90	37	43
KUSTS43-xx.xx	47.00	51.99	3	UB43	43	97	90	41	48
KUSTS47-xx.xx	52.00	56.99	3	UB47	47	107	100	44	53
KUSTS51-xx.xx	57.00	60.99	3	UB51	51	118	110	49	57
KUSTS56-xx.xx	61.00	67.99	3	UB56	56	119	110	53	64
KUSTS62-xx.xx	68.00	74.99	3	UB62	62	129	120	59	71
KUSTS68-xx.xx	75.00	80.99	3	UB68	68	161	150	65	77
KUSTS75-xx.xx	81.00	90.99	3	UB75	75	162	150	71	87
KUSTS82-xx.xx	91.00	98.99	3	UB82	82	162	150	79	95
KUSTS94-xx.xx	99.00	106.99	3	UB94	94	163	150	90	102

For drill heads in diameters of ø92 mm or larger, a filler is attached in place of guide pad.
Before drilling operation, please adjust drill diameter. For diameter adjustment please see page 056.

INSERTS

Tool diameter DCN-DCX (mm)	Peripheral insert	Qty	Intermediate insert	Qty	Central insert	Qty
38 - 39.99	NPMX08**R...	1	NPMX08**R...	1	NPMX08**R...	1
40 - 44.99	TPMX14**R...	1	NPMX08**R...	1	NPMX08**R...	1
45 - 47.99	TPMX14**R...	1	NPMX08**R...	1	TPMX14**R...	1
48 - 51.99	TPMX14**R...	1	TPMX14**R...	1	TPMX14**R...	1
52 - 54.99	TPMX17**R...	1	TPMX14**R...	1	TPMX14**R...	1
55 - 57.99	TPMX17**R...	1	TPMX14**R...	1	TPMX17**R...	1
58 - 59.99	TPMX17**R...	1	TPMX17**R...	1	TPMX17**R...	1
60 - 63.99	TPMX17**R...	1	TPMX17**R...	1	TPMX17**R...	1
64 - 67.99	TPMX24**R...	1	TPMX17**R...	1	TPMX17**R...	1
68 - 77.99	TPMX17**R...	1	TPMX24**R...	1	TPMX24**R...	1
78 - 84.99	TPMX24**R...	1	TPMX24**R...	1	TPMX24**R...	1
85 - 91.99	TPMX28**R...	1	TPMX24**R...	1	TPMX24**R...	1
92 - 98.99	TPMX24**R...	1	TPMX28**R...	1	TPMX28**R...	1
99 - 106.99	TPMX28**R...	1	TPMX28**R...	1	TPMX28**R...	1

⊕ **Plus**: The drill diameter can be increased by up to 5 mm by using the Plus parts. A maximum expandable diameter is determined by the peripheral cartridge size used on the drill. See page 055 for details.
Drill heads come with cartridge, guide pad, filler, protector, sub guide pad and wrench, but do not include inserts.

Reference pages: Screws, Wrenches → 034, Inserts → 049 - 050, Guide pad → 052, Standard cutting conditions → 053, Drill tube (STS) → 089

SPARE PARTS

Tool diameter DCN-DCX (mm)	Cartridge			Guide pad							
	Peripheral	Intermediate	Central	Guide pad		Filler		Protector		Sub guide pad	
	Cartridge ①	Cartridge ②	Cartridge ③	④	Qty	⑤	Qty	⑥	Qty	⑦	Qty
38 - 39.99	OZ05R	IOZ05R	IOZ05R	GP08	2	-	-	GPT08	2	CUG08	1
40 - 44.99	OZ402 - 04	IOZ05R	IOZ05R	GP08	2	-	-	GPT08	2	CUG08	1
45 - 47.99	OZ402 - 04	IOZ05R	IOZ402 - 04	GP10	2	-	-	GPT10	2	CUG08	1
48 - 51.99	OZ402 - 04	IOZ402 - 04	IOZ402 - 04	GP10	2	-	-	GPT10	2	CUG08	1
52 - 54.99	OZ402 - 32	IOZ402 - 04	IOZ402 - 04	GP10	2	-	-	GPT10	2	CUG08	1
55 - 57.99	OZ402 - 32	IOZ402 - 04	IOZ402 - 32	GP10	2	-	-	GPT10	2	CUG08	1
58 - 59.99	OZ402 - 32	IOZ402 - 32	IOZ402 - 32	GP10	2	-	-	GPT10	2	CUG08	1
60 - 63.99	OZ402 - 32	IOZ402 - 32	IOZ402 - 32	GP14	2	-	-	GPT14	2	CUG08	1
64 - 67.99	OZ402 - 43	IOZ402 - 32	IOZ402 - 32	GP14	2	-	-	GPT14	2	CUG10	1
68 - 77.99	OZ402 - 32	IOZ402 - 43	IOZ402 - 43	GP14	2	-	-	GPT14	2	CUG10	1
78 - 84.99	OZ402 - 43	IOZ402 - 43	IOZ402 - 43	GP14	2	-	-	GPT14	2	CUG10	1
85 - 91.99	OZ402 - 63	IOZ402 - 43	IOZ402 - 43	GP14	2	-	-	GPT14	2	CUG10	1
92 - 98.99	OZ402 - 43	IOZ402 - 63	IOZ402 - 63	GP14	2	FILLER14	1	GPT14	2	CUG10	1
99 - 106.99	OZ402 - 63	IOZ402 - 63	IOZ402 - 63	GP18	2	FL18 - M	1	GPT18 - M	2	CUG14 - M	1

See page 094 on handling of filler.

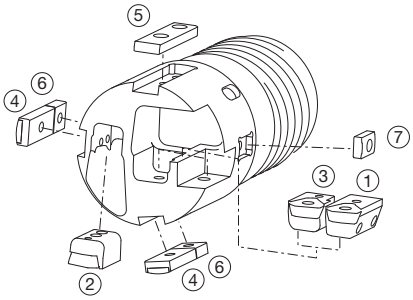

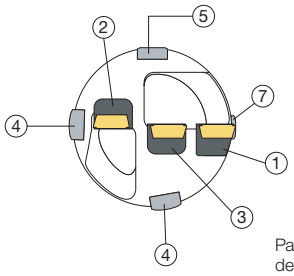

Part positions may vary depending on the drill size.

SCREWS, WRENCHES (CICT = 3)

Tool diameter DCN-DCX (mm)	Insert screw					
	Peripheral		Intermediate		Central	
	Cartridge①		Cartridge②		Cartridge③	
	Screw	Wrench	Screw	Wrench	Screw	Wrench
38 - 39.99	CSTB-2.2	T-7D	CSTB-2.2	T-7D	CSTB-2.2	T-7D
40 - 44.99	CSTB-2.5	T-8D	CSTB-2.2	T-7D	CSTB-2.2	T-7D
45 - 47.99	CSTB-2.5	T-8D	CSTB-2.2	T-7D	CSTB-2.5	T-8D
48 - 51.99	CSTB-2.5	T-8D	CSTB-2.5	T-8D	CSTB-2.5	T-8D
52 - 54.99	CSTB-3.5D	T-9D	CSTB-2.5	T-8D	CSTB-2.5	T-8D
55 - 57.99	CSTB-3.5D	T-9D	CSTB-2.5	T-8D	CSTB-3.5D	T-9D
58 - 59.99	CSTB-3.5D	T-9D	CSTB-3.5D	T-9D	CSTB-3.5D	T-9D
60 - 63.99	CSTB-3.5D	T-9D	CSTB-3.5D	T-9D	CSTB-3.5D	T-9D
64 - 67.99	CSTB-4M	T-15D	CSTB-3.5D	T-9D	CSTB-3.5D	T-9D
68 - 77.99	CSTB-3.5D	T-9D	CSTB-4M	T-15D	CSTB-4M	T-15D
78 - 84.99	CSTB-4M	T-15D	CSTB-4M	T-15D	CSTB-4M	T-15D
85 - 91.99	CSTB-5	T-20D	CSTB-4M	T-15D	CSTB-4M	T-15D
92 - 98.99	CSTB-4M	T-15D	CSTB-5	T-20D	CSTB-5	T-20D
99 - 106.99	CSTB-5	T-20D	CSTB-5	T-20D	CSTB-5	T-20D

SCREWS, WRENCHES (CICT = 3)

Tool diameter DCN-DCX (mm)	Cartridge screw								Guide pad screw			
	Peripheral				Intermediate		Central		Guide pad / Filler / Protector		Sub guide pad	
	Cartridge①				Cartridge②		Cartridge③					
	Screw	Wrench	Adj. screw	Wrench	Screw	Wrench	Screw	Wrench	Screw	Wrench	Screw	Wrench
38 - 39.99	LS1803RH	H2	AS0003-5	H1.5	CSTB-3	T-9D	CSTB-3	T-9D	CSTB-3S	T-9D	CSTB-3S	T-9D
40 - 44.99	LS1803.5RH	H2.5	AS0004-8	H2	CSTB-3	T-9D	CSTB-3	T-9D	CSTB-3S	T-9D	CSTB-3S	T-9D
45 - 47.99	LS1803.5RH	H2.5	AS0004-8	H2	CSTB-3	T-9D	CSTB-3.5	T-9D	CSTB-4S	T-15D	CSTB-3S	T-9D
48 - 51.99	LS1803.5RH	H2.5	AS0004-8	H2	CSTB-3.5	T-15D	CSTB-3.5	T-15D	CSTB-4S	T-15D	CSTB-3S	T-9D
52 - 54.99	LS1805RH	H3	AS0005-10	H2.5	CSTB-3.5	T-15D	CSTB-3.5	T-15D	CSTB-4S	T-15D	CSTB-3S	T-9D
55 - 57.99	LS1805RH	H3	AS0005-10	H2.5	CSTB-3.5	T-15D	CSTA-5	T-15D	CSTB-4S	T-15D	CSTB-3S	T-9D
58 - 59.99	LS1805RH	H3	AS0005-10	H2.5	CSTA-5	T-15D	CSTA-5	T-15D	CSTB-4S	T-15D	CSTB-3S	T-9D
60 - 63.99	LS1805RH	H3	AS0005-10	H2.5	CSTA-5	T-15D	CSTA-5	T-15D	CSTA-5S	T-15D	CSTB-3S	T-9D
64 - 67.99	LS1806RH	H4	AS0005-15	H2.5	CSTA-5	T-15D	CSTA-5	T-15D	CSTA-5S	T-15D	CSTB-3S	T-9D
68 - 77.99	LS1805RH	H3	AS0005-10	H2.5	LS1206	H3	LS1206	H3	CSTA-5SS	T-15D	CSTB-3S	T-9D
78 - 84.99	LS1806RH	H4	AS0005-15	H2.5	LS1206	H3	LS1206	H3	CSTA-5S	T-15D	CSTB-3S	T-9D
85 - 91.99	LS1806RH	H4	AS0006-15	H3	LS1206	H3	LS1206	H3	CSTA-5S	T-15D	CSTB-3S	T-9D
92 - 98.99	LS1806RH	H4	AS0005-15	H2.5	LS1206	H3	LS1206S	H3	CSTA-5SS	T-15D	CSTB-3S	T-9D
99 - 106.99	LS1806RH	H4	AS0006-15	H3	LS1206	H3	LS1206S	H3	LS1206S	H3	CSTA-5S	T-15D

Recommended clamping torque: please see page 054.

UNIDEX STS

UNIDEX STS-EX

Indexable drill head with external 4-start thread for single tube system (STS), diameters adjustable, tool diameter ø107.00 - ø168.99 mm, CICT = 5

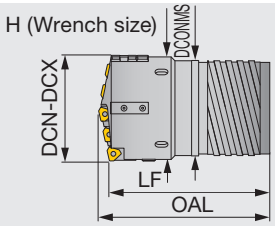

Non-standard products (to be supplied on request)

When ordering

KUSTS**E	-	xx.xx
Drill head		Diameter (mm)

e.g. Designation for tool diameter ø150 mm: **KUSTS23E-150.00**

Designation	DCN	DCX	CICT	Drill tube		Drill head			
				Designation	Dia. (mm)	OAL	LF	DCONMS	H
KUSTS19E-xx.xx	107.00	111.99	5	ST19	94	197	180	89	107
KUSTS20E-xx.xx	112.00	123.99	5	ST20	106	221	205	101	119
KUSTS21E-xx.xx	124.00	135.99	5	ST21	118	222	205	113	131
KUSTS22E-xx.xx	136.00	147.99	5	ST22	130	223	205	125	143
KUSTS23E-xx.xx	148.00	159.99	5	ST23	142	245	225	137	155
KUSTS24E-xx.xx	160.00	168.99	5	ST24	154	246	225	149	164

Before drilling operation, please adjust drill diameter. For diameter adjustment please see page 056.

Reference pages: Screws, Wrenches → 037, Inserts → 036, 049 - 050, Guide pad → 052, Standard cutting conditions → 053, Drill tube (STS) → 087

UNIDEX STS-IN

Indexable drill head with internal single-start thread for single tube system (STS), diameters adjustable, tool diameter ø107.00 - ø168.99 mm, CICT = 5

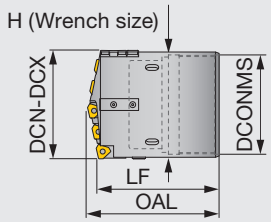

Non-standard products (to be supplied on request)

When ordering

KUSTS**	-	xx.xx
Drill head		Diameter (mm)

e.g. Designation for tool diameter ø150 mm: **KUSTS142-150.00**

Designation	DCN	DCX	CICT	Drill tube		Drill head			
				Designation	Dia. (mm)	OAL	LF	DCONMS	H
KUSTS94-xx.xx	107.00	110.99	5	UB94	94	164	150	90	106
KUSTS106-xx.xx	111.00	122.99	5	UB106	106	165	150	102	118
KUSTS118-xx.xx	123.00	134.99	5	UB118	118	167	150	114	130
KUSTS130-xx.xx	135.00	148.99	5	UB130	130	168	150	126	144
KUSTS142-xx.xx	149.00	161.99	5	UB142	142	170	150	139	157
KUSTS154-xx.xx	162.00	168.99	5	UB154	154	211	190	151	164

Before drilling operation, please adjust drill diameter. For diameter adjustment please see page 056.

INSERTS

Tool diameter DCN-DCX (mm)	Peripheral	Qty	Intermediate	Qty	Intermediate	Qty	Central	Qty
107.00 - 117.99	TPMX24**R...	1	TPMX17**R...	3	-		TPMX24**R...	1
118.00 - 135.99	TPMX24**R...	1	TPMX24**R...	3	-		TPMX24**R...	1
136.00 - 144.99	TPMX24**R...	1	TPMX24**R...	3	-		TPMX28**R...	1
145.00 - 150.99	TPMX24**R...	1	TPMX24**R...	2	TPMX28**R...	1	TPMX28**R...	1
151.00 - 156.99	TPMX28**R...	1	TPMX24**R...	2	TPMX28**R...	1	TPMX28**R...	1
157.00 - 162.99	TPMX28**R...	1	TPMX24**R...	1	TPMX28**R...	2	TPMX28**R...	1
163.00 - 168.99	TPMX28**R...	1	TPMX28**R...	3	-		TPMX28**R...	1

⊕ **Plus**: The drill diameter can be increased by up to 5 mm by using the Plus parts. A maximum expandable diameter is determined by the peripheral cartridge size used on the drill. See page 055 for details.

Drill heads come with cartridge, guide pad, filler, protector, sub guide pad and wrench, but do not include inserts.

Reference pages: Screws, Wrenches → 037, Inserts → 049 - 050, Guide pad → 052, Standard cutting conditions → 053, Drill tube (STS) → 089

SPARE PARTS

Tool diameter DCN-DCX (mm)	Cartridge				
	Peripheral	Intermediate			Central
	Cartridge①	Cartridge②	Cartridge③	Cartridge④	Cartridge⑤
107.00 - 117.99	OZ402 - 43	IOZ402 - 32	IOZ402 - 32	IOZ402 - 32	IOZ402 - 43
118.00 - 135.99	OZ402 - 43	IOZ402 - 43	IOZ402 - 43	IOZ402 - 43	IOZ402 - 43
136.00 - 144.99	OZ402 - 43	IOZ402 - 43	IOZ402 - 43	IOZ402 - 43	IOZ402 - 63
145.00 - 150.99	OZ402 - 43	IOZ402 - 43	IOZ402 - 63	IOZ402 - 43	IOZ402 - 63
151.00 - 156.99	OZ402 - 63	IOZ402 - 43	IOZ402 - 63	IOZ402 - 43	IOZ402 - 63
157.00 - 162.99	OZ402 - 63	IOZ402 - 43	IOZ402 - 63	IOZ402 - 63	IOZ402 - 63
163.00 - 168.99	OZ402 - 63	IOZ402 - 63	IOZ402 - 63	IOZ402 - 63	IOZ402 - 63

SPARE PARTS

Tool diameter DCN-DCX (mm)	Guide pad							
	Guide pad		Filler		Protector		Sub guide pad	
	⑥	Qty	⑦	Qty	⑧	Qty	⑨	Qty
107.00 - 117.99	GP18	2	FL18 - M	1	GPT18 - M	2	CUG14 - M	1
118.00 - 135.99	GP18	2	FL18 - M	1	GPT18 - M	2	CUG14 - M	1
136.00 - 144.99	GP18	4	FL18 - M	1	GPT18 - M	4	CUG14 - M	1
145.00 - 150.99	GP18	4	FL18 - M	1	GPT18 - M	4	CUG14 - M	1
151.00 - 156.99	GP18	4	FL18 - M	1	GPT18 - M	4	CUG14 - M	1
157.00 - 162.99	GP18	4	FL18 - M	1	GPT18 - M	4	CUG14 - M	1
163.00 - 168.99	GP18	4	FL18 - M	1	GPT18 - M	4	CUG14 - M	1

See page 094 on handling of filler.

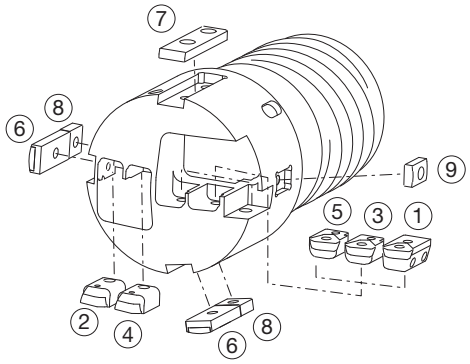

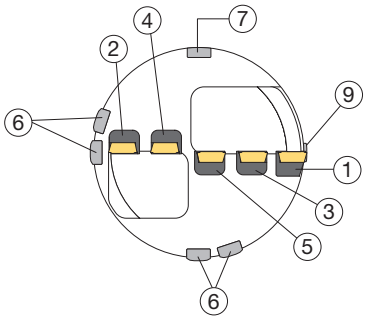

Part positions may vary depending on the drill size.

SCREWS, WRENCHES (CICT = 5)

Tool diameter DCN-DCX (mm)	Insert screw									
	Peripheral		Intermediate						Central	
	Cartridge①		Cartridge②		Cartridge③		Cartridge④		Cartridge⑤	
	Screw	Wrench	Screw	Wrench	Screw	Wrench	Screw	Wrench	Screw	Wrench
107.00 - 117.99	CSTB-4M	T-15D	CSTB-3.5D	T-9D	CSTB-3.5D	T-9D	CSTB-3.5D	T-9D	CSTB-4M	T-15D
118.00 - 135.99	CSTB-4M	T-15D	CSTB-4M	T-15D	CSTB-4M	T-15D	CSTB-4M	T-15D	CSTB-4M	T-15D
136.00 - 144.99	CSTB-4M	T-15D	CSTB-4M	T-15D	CSTB-4M	T-15D	CSTB-4M	T-15D	CSTB-5	T-20D
145.00 - 150.99	CSTB-4M	T-15D	CSTB-4M	T-15D	CSTB-5	T-20D	CSTB-4M	T-15D	CSTB-5	T-20D
151.00 - 156.99	CSTB-5	T-20D	CSTB-4M	T-15D	CSTB-5	T-20D	CSTB-4M	T-15D	CSTB-5	T-20D
157.00 - 162.99	CSTB-5	T-20D	CSTB-4M	T-15D	CSTB-5	T-20D	CSTB-5	T-20D	CSTB-5	T-20D
163.00 - 168.99	CSTB-5	T-20D	CSTB-5	T-20D	CSTB-5	T-20D	CSTB-5	T-20D	CSTB-5	T-20D

SCREWS, WRENCHES (CICT = 5)

Tool diameter DCN-DCX (mm)	Cartridge screw								Guide pad screw			
	Peripheral				Intermediate		Central		Guide pad / Filler / Protector		Sub guide pad	
	Cartridge①				Cartridge②-④		Cartridge⑤					
	Screw	Wrench	Adj. screw	Wrench	Screw	Wrench	Screw	Wrench	Screw	Wrench	Screw	Wrench
107.00 - 117.99	LS1806RH	H4	AS0005-15	H2.5	CSTA-5	T-15D	LS1206	H3	LS1206S	H3	CSTA-5S	T-15D
118.00 - 135.99	LS1806RH	H4	AS0005-15	H2.5	LS1206	H3	LS1206	H3	LS1206SSS	H3	CSTA-5S	T-15D
136.00 - 144.99	LS1806RH	H4	AS0005-15	H2.5	LS1206	H3	LS1206S	H3	LS1206SSS	H3	CSTA-5S	T-15D
145.00 - 150.99	LS1806RH	H4	AS0005-15	H2.5	LS1206	H3	LS1206S	H3	LS1206SSS	H3	CSTA-5S	T-15D
151.00 - 156.99	LS1806RH	H4	AS0006-15	H3	LS1206	H3L	LS1206S	H3L	LS1206S	H3	CSTA-5S	T-15D
157.00 - 162.99	LS1806RH	H4	AS0006-15	H3	LS1206	H3L	LS1206S	H3L	LS1206S	H3	CSTA-5S	T-15D
163.00 - 168.99	LS1806RH	H4	AS0006-15	H3	LS1206	H3L	LS1206S	H3L	LS1206S	H3	CSTA-5S	T-15D

Recommended clamping torque: please see page 054.

Indexable drill head with external 4-start thread for single tube system (STS), diameters adjustable, tool diameter ø169.00 - ø232.99 mm, CICT = 7

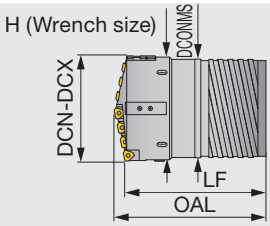

Non-standard products (to be supplied on request)

When ordering

KUSTS**E	-	xx.xx
Drill head		Diameter (mm)

e.g. Designation for tool diameter ø185 mm: **KUSTS26E-185.00**

Designation	DCN	DCX	CICT	Drill tube		Drill head			
				Designation	Dia. (mm)	OAL	LF	DCONMS	H
KUSTS24E-xx.xx	169.00	171.99	7	ST24	154	246	225	149	167
KUSTS25E-xx.xx	172.00	183.99	7	ST25	166	247	225	161	179
KUSTS26E-xx.xx	184.00	195.99	7	ST26	178	267	245	173	191
KUSTS27E-xx.xx	196.00	207.99	7	ST27	190	270	245	185	203
KUSTS28E-xx.xx	208.00	219.99	7	ST28	202	271	245	197	215
KUSTS29E-xx.xx	220.00	231.99	7	ST29	214	293	265	208	227
KUSTS30E-xx.xx	232.00	232.99	7	ST30	226	293	265	220	228

Before drilling operation, please adjust drill diameter. For diameter adjustment please see page 056.

Reference pages: Screws, Wrenches → 040, Inserts → 039, 049 - 050, Guide pad → 052, Standard cutting conditions → 053, Drill tube (STS) → 087

UNIDEX STS

UNIDEX STS-IN

Indexable drill head with internal single-start thread for single tube system (STS), diameters adjustable, tool diameter ø169.00 - ø232.99 mm, CICT = 7

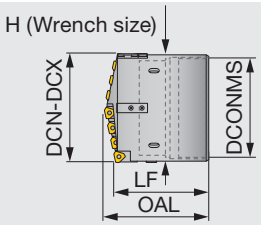

Non-standard products (to be supplied on request)

When ordering

KUSTS**	-	xx.xx
Drill head		Diameter (mm)

e.g. Designation for tool diameter ø185 mm: **KUSTS166-185.00**

Designation	DCN	DCX	CICT	Drill tube		Drill head			
				Designation	Dia. (mm)	OAL	LF	DCONMS	H
KUSTS154-xx.xx	169.00	173.99	7	UB154	154	211	190	151	169
KUSTS166-xx.xx	174.00	185.99	7	UB166	166	213	190	163	181
KUSTS178-xx.xx	186.00	197.99	7	UB178	178	212	190	175	193
KUSTS190-xx.xx	198.00	209.99	7	UB190	190	215	190	187	205
KUSTS202-xx.xx	210.00	221.99	7	UB202	202	217	190	199	217
KUSTS214-xx.xx	222.00	232.99	7	UB214	214	218	190	211	228

Before drilling operation, please adjust drill diameter. For diameter adjustment please see page 056.

INSERTS

Tool diameter DCN-DCX (mm)	Peripheral	Qty	Intermediate	Qty	Intermediate	Qty	Central	Qty
169.00 - 188.99	TPMX24**R...	1	TPMX24**R...	5	-		TPMX24**R...	1
189.00 - 196.99	TPMX24**R...	1	TPMX24**R...	5	-		TPMX28**R...	1
197.00 - 202.99	TPMX24**R...	1	TPMX24**R...	4	TPMX28**R...	1	TPMX28**R...	1
203.00 - 208.99	TPMX24**R...	1	TPMX24**R...	3	TPMX28**R...	2	TPMX28**R...	1
209.00 - 214.99	TPMX28**R...	1	TPMX24**R...	3	TPMX28**R...	2	TPMX28**R...	1
215.00 - 220.99	TPMX28**R...	1	TPMX24**R...	2	TPMX28**R...	3	TPMX28**R...	1
221.00 - 226.99	TPMX28**R...	1	TPMX24**R...	1	TPMX28**R...	4	TPMX28**R...	1
227.00 - 232.99	TPMX28**R...	1	TPMX28**R...	5	-		TPMX28**R...	1

⊕ **Plus**: The drill diameter can be increased by up to 5 mm by using the Plus parts. A maximum expandable diameter is determined by the peripheral cartridge size used on the drill. See page 055 for details.

Drill heads come with cartridge, guide pad, filler, protector, sub guide pad and wrench, but do not include inserts.

Reference pages: Screws, Wrenches → 040, Inserts → 049 - 050, Guide pad → 052, Standard cutting conditions → 053, Drill tube (STS) → 089

SPARE PARTS

Tool diameter DCN-DCX (mm)	Cartridge						
	Peripheral	Intermediate					Central
	Cartridge①	Cartridge②	Cartridge③	Cartridge④	Cartridge⑤	Cartridge⑥	Cartridge⑦
169.00 - 188.99	OZ402 - 43	IOZ402 - 43	IOZ402 - 43	IOZ402 - 43	IOZ402 - 43	IOZ402 - 43	IOZ402 - 43
189.00 - 196.99	OZ402 - 43	IOZ402 - 43	IOZ402 - 43	IOZ402 - 43	IOZ402 - 43	IOZ402 - 43	IOZ402 - 63
197.00 - 202.99	OZ402 - 43	IOZ402 - 43	IOZ402 - 43	IOZ402 - 43	IOZ402 - 63	IOZ402 - 43	IOZ402 - 63
203.00 - 208.99	OZ402 - 43	IOZ402 - 43	IOZ402 - 63	IOZ402 - 43	IOZ402 - 63	IOZ402 - 43	IOZ402 - 63
209.00 - 214.99	OZ402 - 63	IOZ402 - 43	IOZ402 - 63	IOZ402 - 43	IOZ402 - 63	IOZ402 - 43	IOZ402 - 63
215.00 - 220.99	OZ402 - 63	IOZ402 - 43	IOZ402 - 63	IOZ402 - 43	IOZ402 - 63	IOZ402 - 63	IOZ402 - 63
221.00 - 226.99	OZ402 - 63	IOZ402 - 43	IOZ402 - 63	IOZ402 - 63	IOZ402 - 63	IOZ402 - 63	IOZ402 - 63
227.00 - 232.99	OZ402 - 63	IOZ402 - 63	IOZ402 - 63	IOZ402 - 63	IOZ402 - 63	IOZ402 - 63	IOZ402 - 63

SPARE PARTS

Tool diameter DCN-DCX (mm)	Guide pad							
	Guide pad		Filler		Protector		Sub guide pad	
	⑧	Qty	⑨	Qty	⑩	Qty	⑪	Qty
169.00 - 188.99	GP18	4	FL18 - M	1	GPT18 - M	4	CUG14 - M	1
189.00 - 196.99	GP18	4	FL18 - M	1	GPT18 - M	4	CUG14 - M	1
197.00 - 202.99	GP18	4	FL18 - M	1	GPT18 - M	4	CUG14 - M	1
203.00 - 208.99	GP18	4	FL18 - M	1	GPT18 - M	4	CUG14 - M	1
209.00 - 214.99	GP18	4	FL18 - M	1	GPT18 - M	4	CUG14 - M	1
215.00 - 220.99	GP18	4	FL18 - M	1	GPT18 - M	4	CUG14 - M	1
221.00 - 226.99	GP18	4	FL18 - M	1	GPT18 - M	4	CUG14 - M	1
227.00 - 232.99	GP18	4	FL18 - M	1	GPT18 - M	4	CUG14 - M	1

See page 094 on handling of filler.

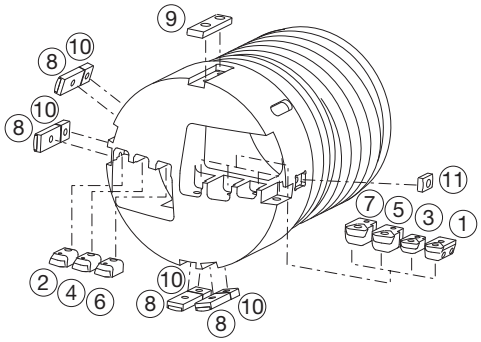

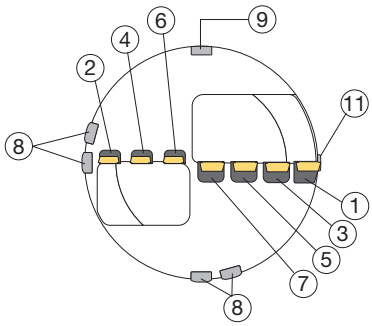

Part positions may vary depending on the drill size.

SCREWS, WRENCHES (CICT = 7)

Tool diameter DCN-DCX (mm)	Insert screw													
	Peripheral		Intermediate										Central	
	Cartridge①		Cartridge②		Cartridge③		Cartridge④		Cartridge⑤		Cartridge⑥		Cartridge⑦	
	Screw	Wrench	Screw	Wrench	Screw	Wrench	Screw	Wrench	Screw	Wrench	Screw	Wrench	Screw	Wrench
169.00 - 188.99	CSTB-4M	T-15D	CSTB-4M	T-15D	CSTB-4M	T-15D	CSTB-4M	T-15D	CSTB-4M	T-15D	CSTB-4M	T-15D	CSTB-4M	T-15D
189.00 - 196.99	CSTB-4M	T-15D	CSTB-4M	T-15D	CSTB-4M	T-15D	CSTB-4M	T-15D	CSTB-4M	T-15D	CSTB-4M	T-15D	CSTB-5	T-20D
197.00 - 202.99	CSTB-4M	T-15D	CSTB-4M	T-15D	CSTB-4M	T-15D	CSTB-4M	T-15D	CSTB-5	T-20D	CSTB-4M	T-15D	CSTB-5	T-20D
203.00 - 208.99	CSTB-4M	T-15D	CSTB-4M	T-15D	CSTB-5	T-20D	CSTB-4M	T-15D	CSTB-5	T-20D	CSTB-4M	T-15D	CSTB-5	T-20D
209.00 - 214.99	CSTB-5	T-20D	CSTB-4M	T-15D	CSTB-5	T-20D	CSTB-4M	T-15D	CSTB-5	T-20D	CSTB-4M	T-15D	CSTB-5	T-20D
215.00 - 220.99	CSTB-5	T-20D	CSTB-4M	T-15D	CSTB-5	T-20D	CSTB-4M	T-15D	CSTB-5	T-20D	CSTB-5	T-20D	CSTB-5	T-20D
221.00 - 226.99	CSTB-5	T-20D	CSTB-4M	T-15D	CSTB-5	T-20D	CSTB-5	T-20D	CSTB-5	T-20D	CSTB-5	T-20D	CSTB-5	T-20D
227.00 - 232.99	CSTB-5	T-20D	CSTB-5	T-20D	CSTB-5	T-20D	CSTB-5	T-20D	CSTB-5	T-20D	CSTB-5	T-20D	CSTB-5	T-20D

SCREWS, WRENCHES (CICT = 7)

Tool diameter DCN-DCX (mm)	Cartridge screw								Guide pad screw			
	Peripheral				Intermediate		Central		Guide pad / Filler / Protector		Sub guide pad	
	Cartridge①				Cartridge②-⑥		Cartridge⑦					
	Screw	Wrench	Adj. screw	Wrench	Screw	Wrench	Screw	Wrench	Screw	Wrench	Screw	Wrench
169.00 - 188.99	LS1806RH	H4	AS0005-15	H2.5	LS1206	H3L	LS1206	H3L	LS1206SSS	H3	CSTA-5S	T-15D
189.00 - 196.99	LS1806RH	H4	AS0005-15	H2.5	LS1206	H3L	LS1206S	H3L	LS1206SSS	H3	CSTA-5S	T-15D
197.00 - 202.99	LS1806RH	H4	AS0005-15	H2.5	LS1206	H3L	LS1206S	H3L	LS1206SSS	H3	CSTA-5S	T-15D
203.00 - 208.99	LS1806RH	H4	AS0005-15	H2.5	LS1206	H3L	LS1206S	H3L	LS1206SSS	H3	CSTA-5S	T-15D
209.00 - 214.99	LS1806RH	H4	AS0006-15	H3	LS1206	H3L	LS1206S	H3L	LS1206S	H3	CSTA-5S	T-15D
215.00 - 220.99	LS1806RH	H4	AS0006-15	H3	LS1206	H3L	LS1206S	H3L	LS1206S	H3	CSTA-5S	T-15D
221.00 - 226.99	LS1806RH	H4	AS0006-15	H3	LS1206	H3L	LS1206S	H3L	LS1206S	H3	CSTA-5S	T-15D
227.00 - 232.99	LS1806RH	H4	AS0006-15	H3	LS1206	H3L	LS1206S	H3L	LS1206S	H3	CSTA-5S	T-15D

Recommended clamping torque: please see page 054.

UNIDEX STS

UNIDEX STS-EX

Indexable drill head with external 4-start thread for single tube system (STS), diameters adjustable, tool diameter ø233.00 - ø291.99 mm, CICT = 9

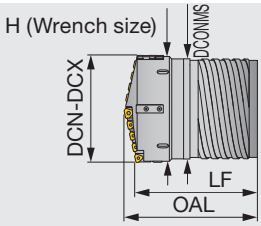

Non-standard products (to be supplied on request)

When ordering

KUSTS**E	-	xx.xx
Drill head		Diameter (mm)

e.g. Designation for tool diameter ø240 mm: **KUSTS30E-240.00**

Designation	DCN	DCX	CICT	Drill tube		Drill head			
				Designation	Dia. (mm)	OAL	LF	DCONMS	H
KUSTS30E-xx.xx	233.00	243.99	9	ST30	226	294	265	220	239
KUSTS31E-xx.xx	244.00	255.99	9	ST31	238	294	265	232	251
KUSTS32E-xx.xx	256.00	267.99	9	ST32	250	322	290	244	263
KUSTS33E-xx.xx	268.00	279.99	9	ST33	262	323	290	256	275
KUSTS34E-xx.xx	280.00	291.99	9	ST34	274	325	290	268	287

Before drilling operation, please adjust drill diameter. For diameter adjustment please see page 056.
Larger sizes available upon request. Please contact your dealer for further information.

Reference pages: Screws, Wrenches → 043, Inserts → 042, 049 - 050, Guide pad → 052, Standard cutting conditions → 053, Drill tube (STS) → 087

UNIDEX STS

UNIDEX STS-IN

Indexable drill head with internal single-start thread for single tube system (STS), diameters adjustable, tool diameter ø233.00 - ø293.99 mm, CICT = 9

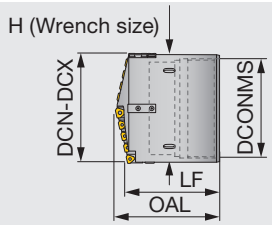

Non-standard products (to be supplied on request)

When ordering

KUSTS**	-	xx.xx
Drill head		Diameter (mm)

e.g. Designation for tool diameter ø240 mm: **KUSTS226-240.00**

Designation	DCN	DCX	CICT	Drill tube		Drill head			
				Designation	Dia. (mm)	OAL	LF	DCONMS	H
KUSTS214-xx.xx	233.00	233.99	9	UB214	214	217	190	211	229
KUSTS226-xx.xx	234.00	245.99	9	UB226	226	219	190	223	241
KUSTS238-xx.xx	246.00	257.99	9	UB238	238	221	190	235	253
KUSTS250-xx.xx	258.00	269.99	9	UB250	250	242	210	245	265
KUSTS262-xx.xx	270.00	281.99	9	UB262	262	244	210	259	277
KUSTS274-xx.xx	282.00	293.99	9	UB274	274	245	210	271	289

Before drilling operation, please adjust drill diameter. For diameter adjustment please see page 056.
Larger sizes available upon request. Please contact your dealer for further information.

INSERTS

Tool diameter DCN-DCX (mm)	Peripheral	Qty	Intermediate	Qty	Intermediate	Qty	Central	Qty
233.00 - 247.99	TPMX24**R...	1	TPMX24**R...	7	-		TPMX28**R...	1
248.00 - 253.99	TPMX28**R...	1	TPMX24**R...	7	-		TPMX28**R...	1
254.00 - 258.99	TPMX28**R...	1	TPMX24**R...	6	TPMX28**R...	1	TPMX28**R...	1
259.00 - 264.99	TPMX28**R...	1	TPMX24**R...	5	TPMX28**R...	2	TPMX28**R...	1
265.00 - 271.99	TPMX28**R...	1	TPMX24**R...	4	TPMX28**R...	3	TPMX28**R...	1
272.00 - 275.99	TPMX28**R...	1	TPMX24**R...	3	TPMX28**R...	4	TPMX28**R...	1
276.00 - 284.99	TPMX28**R...	1	TPMX24**R...	2	TPMX28**R...	5	TPMX28**R...	1
285.00 - 289.99	TPMX28**R...	1	TPMX24**R...	1	TPMX28**R...	6	TPMX28**R...	1
290.00 - 293.99	TPMX28**R...	1	TPMX28**R...	7	-		TPMX28**R...	1

⊕ **Plus**: The drill diameter can be increased by up to 5 mm by using the Plus parts. A maximum expandable diameter is determined by the peripheral cartridge size used on the drill. See page 055 for details.
Drill heads come with cartridge, guide pad, filler, protector, sub guide pad and wrench, but do not include inserts.

Reference pages: Screws, Wrenches → 043, Inserts → 049 - 050, Guide pad → 052, Standard cutting conditions → 053, Drill tube (STS) → 089

SPARE PARTS

Tool diameter DCN-DCX (mm)	Cartridge							
	Peripheral	Intermediate						
	Cartridge①	Cartridge②	Cartridge③	Cartridge④	Cartridge⑤	Cartridge⑥	Cartridge⑦	Cartridge⑧
233.00 - 247.99	OZ402 - 43	IOZ402 - 43	IOZ402 - 43	IOZ402 - 43	IOZ402 - 43	IOZ402 - 43	IOZ402 - 43	IOZ402 - 43
248.00 - 253.99	OZ402 - 63	IOZ402 - 43	IOZ402 - 43	IOZ402 - 43	IOZ402 - 43	IOZ402 - 43	IOZ402 - 43	IOZ402 - 43
254.00 - 258.99	OZ402 - 63	IOZ402 - 43	IOZ402 - 43	IOZ402 - 43	IOZ402 - 43	IOZ402 - 43	IOZ402 - 63	IOZ402 - 43
259.00 - 264.99	OZ402 - 63	IOZ402 - 43	IOZ402 - 43	IOZ402 - 43	IOZ402 - 63	IOZ402 - 43	IOZ402 - 63	IOZ402 - 43
265.00 - 271.99	OZ402 - 63	IOZ402 - 43	IOZ402 - 63	IOZ402 - 43	IOZ402 - 63	IOZ402 - 43	IOZ402 - 63	IOZ402 - 43
272.00 - 275.99	OZ402 - 63	IOZ402 - 43	IOZ402 - 63	IOZ402 - 43	IOZ402 - 63	IOZ402 - 43	IOZ402 - 63	IOZ402 - 63
276.00 - 284.99	OZ402 - 63	IOZ402 - 43	IOZ402 - 63	IOZ402 - 43	IOZ402 - 63	IOZ402 - 63	IOZ402 - 63	IOZ402 - 63
285.00 - 289.99	OZ402 - 63	IOZ402 - 43	IOZ402 - 63	IOZ402 - 63	IOZ402 - 63	IOZ402 - 63	IOZ402 - 63	IOZ402 - 63
290.00 - 293.99	OZ402 - 63	IOZ402 - 63	IOZ402 - 63	IOZ402 - 63	IOZ402 - 63	IOZ402 - 63	IOZ402 - 63	IOZ402 - 63

SPARE PARTS

Tool diameter DCN-DCX (mm)	Cartridge	Guide pad							
	Central	Guide pad		Filler		Protector		Sub guide pad	
	Cartridge⑨	⑩	Qty	⑪	Qty	⑫	Qty	⑬	Qty
233.00 - 247.99	IOZ402 - 63	GP18	4	FL18 - M	1	GPT18 - M	4	CUG14 - M	1
248.00 - 253.99	IOZ402 - 63	GP18	4	FL18 - M	1	GPT18 - M	4	CUG14 - M	1
254.00 - 258.99	IOZ402 - 63	GP18	4	FL18 - M	1	GPT18 - M	4	CUG14 - M	1
259.00 - 264.99	IOZ402 - 63	GP18	4	FL18 - M	1	GPT18 - M	4	CUG14 - M	1
265.00 - 271.99	IOZ402 - 63	GP18	4	FL18 - M	1	GPT18 - M	4	CUG14 - M	1
272.00 - 275.99	IOZ402 - 63	GP18	4	FL18 - M	1	GPT18 - M	4	CUG14 - M	1
276.00 - 284.99	IOZ402 - 63	GP18	4	FL18 - M	1	GPT18 - M	4	CUG14 - M	1
285.00 - 289.99	IOZ402 - 63	GP18	4	FL18 - M	1	GPT18 - M	4	CUG14 - M	1
290.00 - 293.99	IOZ402 - 63	GP18	4	FL18 - M	1	GPT18 - M	4	CUG14 - M	1

See page 094 on handling of filler.

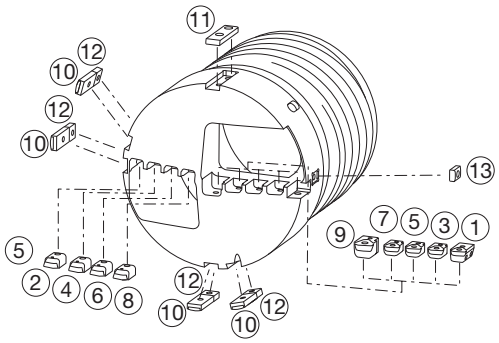

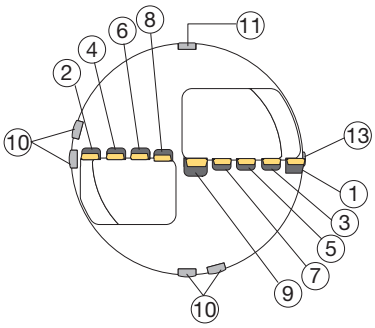

Part positions may vary depending on the drill size.

SCREWS, WRENCHES (CICT = 9)

Tool diameter DCN-DCX (mm)	Insert screw																	
	Peripheral		Intermediate														Central	
	Cartridge①		Cartridge②		Cartridge③		Cartridge④		Cartridge⑤		Cartridge⑥		Cartridge⑦		Cartridge⑧		Cartridge⑨	
	Screw	Wrench	Screw	Wrench	Screw	Wrench	Screw	Wrench	Screw	Wrench	Screw	Wrench	Screw	Wrench	Screw	Wrench	Screw	Wrench
233.00 - 247.99	CSTB-4M	T-15D	CSTB-4M	T-15D	CSTB-4M	T-15D	CSTB-4M	T-15D	CSTB-4M	T-15D	CSTB-4M	T-15D	CSTB-4M	T-15D	CSTB-4M	T-15D	CSTB-5	T-20D
248.00 - 253.99	CSTB-5	T-20D	CSTB-4M	T-15D	CSTB-4M	T-15D	CSTB-4M	T-15D	CSTB-4M	T-15D	CSTB-4M	T-15D	CSTB-4M	T-15D	CSTB-4M	T-15D	CSTB-5	T-20D
254.00 - 258.99	CSTB-5	T-20D	CSTB-4M	T-15D	CSTB-4M	T-15D	CSTB-4M	T-15D	CSTB-4M	T-15D	CSTB-4M	T-15D	CSTB-5	T-20D	CSTB-4M	T-15D	CSTB-5	T-20D
259.00 - 264.99	CSTB-5	T-20D	CSTB-4M	T-15D	CSTB-4M	T-15D	CSTB-4M	T-15D	CSTB-5	T-20D	CSTB-4M	T-15D	CSTB-5	T-20D	CSTB-4M	T-15D	CSTB-5	T-20D
265.00 - 271.99	CSTB-5	T-20D	CSTB-4M	T-15D	CSTB-5	T-20D	CSTB-4M	T-15D	CSTB-5	T-20D	CSTB-4M	T-15D	CSTB-5	T-20D	CSTB-4M	T-15D	CSTB-5	T-20D
272.00 - 275.99	CSTB-5	T-20D	CSTB-4M	T-15D	CSTB-5	T-20D	CSTB-4M	T-15D	CSTB-5	T-20D	CSTB-4M	T-15D	CSTB-5	T-20D	CSTB-5	T-20D	CSTB-5	T-20D
276.00 - 284.99	CSTB-5	T-20D	CSTB-4M	T-15D	CSTB-5	T-20D	CSTB-4M	T-15D	CSTB-5	T-20D	CSTB-5	T-20D	CSTB-5	T-20D	CSTB-5	T-20D	CSTB-5	T-20D
285.00 - 289.99	CSTB-5	T-20D	CSTB-4M	T-15D	CSTB-5	T-20D	CSTB-5	T-20D	CSTB-5	T-20D	CSTB-5	T-20D	CSTB-5	T-20D	CSTB-5	T-20D	CSTB-5	T-20D
290.00 - 293.99	CSTB-5	T-20D	CSTB-5	T-20D	CSTB-5	T-20D	CSTB-5	T-20D	CSTB-5	T-20D	CSTB-5	T-20D	CSTB-5	T-20D	CSTB-5	T-20D	CSTB-5	T-20D

SCREWS, WRENCHES (CICT = 9)

Tool diameter DCN-DCX (mm)	Cartridge screw								Guide pad screw			
	Peripheral				Intermediate		Central		Guide pad / Filler / Protector		Sub guide pad	
	Cartridge①				Cartridge②-⑧		Cartridge⑨					
	Screw	Wrench	Adj. screw	Wrench	Screw	Wrench	Screw	Wrench	Screw	Wrench	Screw	Wrench
233.00 - 247.99	LS1806RH	H4	AS0005-15	H2.5	LS1206	H3L	LS1206S	H3L	LS1206SSS	H3	CSTA-5S	T-15D
248.00 - 253.99	LS1806RH	H4	AS0006-15	H3	LS1206	H3L	LS1206S	H3L	LS1206S	H3	CSTA-5S	T-15D
254.00 - 258.99	LS1806RH	H4	AS0006-15	H3	LS1206	H3L	LS1206S	H3L	LS1206S	H3	CSTA-5S	T-15D
259.00 - 264.99	LS1806RH	H4	AS0006-15	H3	LS1206	H3L	LS1206S	H3L	LS1206S	H3	CSTA-5S	T-15D
265.00 - 271.99	LS1806RH	H4	AS0006-15	H3	LS1206	H3L	LS1206S	H3L	LS1206S	H3	CSTA-5S	T-15D
272.00 - 275.99	LS1806RH	H4	AS0006-15	H3	LS1206	H3L	LS1206S	H3L	LS1206S	H3	CSTA-5S	T-15D
276.00 - 284.99	LS1806RH	H4	AS0006-15	H3	LS1206	H3L	LS1206S	H3L	LS1206S	H3	CSTA-5S	T-15D
285.00 - 289.99	LS1806RH	H4	AS0006-15	H3	LS1206	H3L	LS1206S	H3L	LS1206S	H3	CSTA-5S	T-15D
290.00 - 293.99	LS1806RH	H4	AS0006-15	H3	LS1206	H3L	LS1206S	H3L	LS1206S	H3	CSTA-5S	T-15D

Recommended clamping torque: please see page 054.

UNIDEX DTS

UNIDEX DTS-EX

Indexable drill head with external 4-start thread for double tube system (DTS), diameters adjustable, tool diameter ø38.00 - ø106.99 mm, CICT = 3

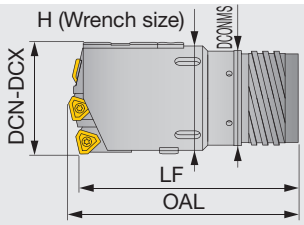

Non-standard products (to be supplied on request)

When ordering

KUDTS**E	-	xx.xx
Drill head		Diameter (mm)

e.g. Designation for tool diameter ø60 mm: **KUDTS13E-60.00**

Designation	DCN	DCX	CICT	Outer tube		Drill head			
				Designation	Dia. (mm)	OAL	LF	DCONMS	H
KUDTS08E-xx.xx	38.00	39.60	3	OT08	35.5	90	85	33	37
KUDTS09E-xx.xx	39.61	43.00	3	OT09	39	91	85	36	40
KUDTS10E-xx.xx	43.01	47.00	3	OT10	42.5	101	95	39	43
KUDTS11E-xx.xx	47.01	51.70	3	OT11	46.5	102	100	43	48
KUDTS12E-xx.xx	51.71	56.20	3	OT12	51	107	100	47	52
KUDTS13E-xx.xx	56.21	65.00	3	OT13	55.5	119	110	51	61
KUDTS14E-xx.xx	65.00	66.99	3	OT14	56	159	150	52	63
KUDTS15E-xx.xx	67.00	72.99	3	OT15	62	159	150	58	69
KUDTS16E-xx.xx	73.00	79.99	3	OT16	68	160	150	63	76
KUDTS17E-xx.xx	80.00	86.99	3	OT17	75	191	180	70	83
KUDTS18E-xx.xx	87.00	99.99	3	OT18	82	193	180	77	96
KUDTS19E-xx.xx	100.00	106.99	3	OT19	94	193	180	89	102

For drill heads in diameters of ø92 mm or larger, a filler is attached in place of guide pad.
Before drilling operation, please adjust drill diameter. For diameter adjustment please see page 056.

INSERTS

Tool diameter DCN-DCX (mm)	Peripheral insert	Qty	Intermediate insert	Qty	Central insert	Qty
38 - 39.99	NPMX08**R...	1	NPMX08**R...	1	NPMX08**R...	1
40 - 44.99	TPMX14**R...	1	NPMX08**R...	1	NPMX08**R...	1
45 - 47.99	TPMX14**R...	1	NPMX08**R...	1	TPMX14**R...	1
48 - 51.99	TPMX14**R...	1	TPMX14**R...	1	TPMX14**R...	1
52 - 54.99	TPMX17**R...	1	TPMX14**R...	1	TPMX14**R...	1
55 - 57.99	TPMX17**R...	1	TPMX14**R...	1	TPMX17**R...	1
58 - 59.99	TPMX17**R...	1	TPMX17**R...	1	TPMX17**R...	1
60 - 63.99	TPMX17**R...	1	TPMX17**R...	1	TPMX17**R...	1
64 - 67.99	TPMX24**R...	1	TPMX17**R...	1	TPMX17**R...	1
68 - 77.99	TPMX17**R...	1	TPMX24**R...	1	TPMX24**R...	1
78 - 84.99	TPMX24**R...	1	TPMX24**R...	1	TPMX24**R...	1
85 - 91.99	TPMX28**R...	1	TPMX24**R...	1	TPMX24**R...	1
92 - 98.99	TPMX24**R...	1	TPMX28**R...	1	TPMX28**R...	1
99 - 106.99	TPMX28**R...	1	TPMX28**R...	1	TPMX28**R...	1

⊕ **Plus**: The drill diameter can be increased by up to 5 mm by using the Plus parts. A maximum expandable diameter is determined by the peripheral cartridge size used on the drill. See page 055 for details.
Drill heads come with cartridge, guide pad, filler, protector, sub guide pad and wrench, but do not include inserts.

Reference pages: Screws, Wrenches → 045, Inserts → 049 - 050, Guide pad → 052, Standard cutting conditions → 053, Drill tube (DTS) → 091

SPARE PARTS

Tool diameter DCN-DCX (mm)	Cartridge			Guide pad							
	Peripheral	Intermediate	Central	Guide pad		Filler		Protector		Sub guide pad	
	Cartridge①	Cartridge②	Cartridge ③	④	Qty	⑤	Qty	⑥	Qty	⑦	Qty
38 - 39.99	OZ05R	IOZ05R	IOZ05R	GP08	2	-	-	GPT08	2	CUG08	1
40 - 44.99	OZ402 - 04	IOZ05R	IOZ05R	GP08	2	-	-	GPT08	2	CUG08	1
45 - 47.99	OZ402 - 04	IOZ05R	IOZ402 - 04	GP10	2	-	-	GPT10	2	CUG08	1
48 - 51.99	OZ402 - 04	IOZ402 - 04	IOZ402 - 04	GP10	2	-	-	GPT10	2	CUG08	1
52 - 54.99	OZ402 - 32	IOZ402 - 04	IOZ402 - 04	GP10	2	-	-	GPT10	2	CUG08	1
55 - 57.99	OZ402 - 32	IOZ402 - 04	IOZ402 - 32	GP10	2	-	-	GPT10	2	CUG08	1
58 - 59.99	OZ402 - 32	IOZ402 - 32	IOZ402 - 32	GP10	2	-	-	GPT10	2	CUG08	1
60 - 63.99	OZ402 - 32	IOZ402 - 32	IOZ402 - 32	GP14	2	-	-	GPT14	2	CUG08	1
64 - 67.99	OZ402 - 43	IOZ402 - 32	IOZ402 - 32	GP14	2	-	-	GPT14	2	CUG10	1
68 - 77.99	OZ402 - 32	IOZ402 - 43	IOZ402 - 43	GP14	2	-	-	GPT14	2	CUG10	1
78 - 84.99	OZ402 - 43	IOZ402 - 43	IOZ402 - 43	GP14	2	-	-	GPT14	2	CUG10	1
85 - 91.99	OZ402 - 63	IOZ402 - 43	IOZ402 - 43	GP14	2	-	-	GPT14	2	CUG10	1
92 - 98.99	OZ402 - 43	IOZ402 - 63	IOZ402 - 63	GP14	2	FILLER14	1	GPT14	2	CUG10	1
99 - 106.99	OZ402 - 63	IOZ402 - 63	IOZ402 - 63	GP18	2	FL18 - M	1	GPT18 - M	2	CUG14 - M	1

See page 094 on handling of filler.

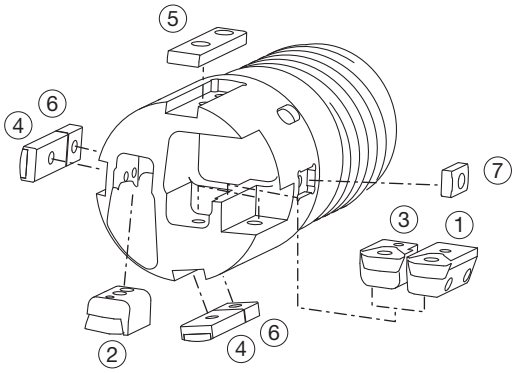

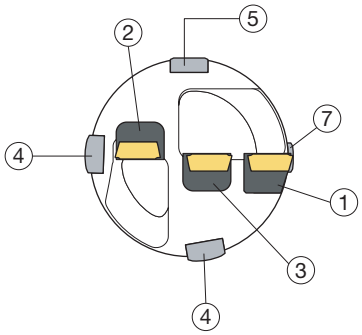

Part positions may vary depending on the drill size.

SCREWS, WRENCHES (CICT = 3)

Tool diameter DCN-DCX (mm)	Insert screw					
	Peripheral		Intermediate		Central	
	Cartridge①		Cartridge②		Cartridge③	
	Screw	Wrench	Screw	Wrench	Screw	Wrench
38 - 39.99	CSTB-2.2	T-7D	CSTB-2.2	T-7D	CSTB-2.2	T-7D
40 - 44.99	CSTB-2.5	T-8D	CSTB-2.2	T-7D	CSTB-2.2	T-7D
45 - 47.99	CSTB-2.5	T-8D	CSTB-2.2	T-7D	CSTB-2.5	T-8D
48 - 51.99	CSTB-2.5	T-8D	CSTB-2.5	T-8D	CSTB-2.5	T-8D
52 - 54.99	CSTB-3.5D	T-9D	CSTB-2.5	T-8D	CSTB-2.5	T-8D
55 - 57.99	CSTB-3.5D	T-9D	CSTB-2.5	T-8D	CSTB-3.5D	T-9D
58 - 59.99	CSTB-3.5D	T-9D	CSTB-3.5D	T-9D	CSTB-3.5D	T-9D
60 - 63.99	CSTB-3.5D	T-9D	CSTB-3.5D	T-9D	CSTB-3.5D	T-9D
64 - 67.99	CSTB-4M	T-15D	CSTB-3.5D	T-9D	CSTB-3.5D	T-9D
68 - 77.99	CSTB-3.5D	T-9D	CSTB-4M	T-15D	CSTB-4M	T-15D
78 - 84.99	CSTB-4M	T-15D	CSTB-4M	T-15D	CSTB-4M	T-15D
85 - 91.99	CSTB-5	T-20D	CSTB-4M	T-15D	CSTB-4M	T-15D
92 - 98.99	CSTB-4M	T-15D	CSTB-5	T-20D	CSTB-5	T-20D
99 - 106.99	CSTB-5	T-20D	CSTB-5	T-20D	CSTB-5	T-20D

SCREWS, WRENCHES (CICT = 3)

Tool diameter DCN-DCX (mm)	Cartridge screw								Guide pad screw			
	Peripheral				Intermediate		Central		Guide pad / Filler / Protector		Sub guide pad	
	Cartridge①				Cartridge②		Cartridge③					
	Screw	Wrench	Adj. screw	Wrench	Screw	Wrench	Screw	Wrench	Screw	Wrench	Screw	Wrench
38 - 39.99	LS1803RH	H2	AS0003-5	H1.5	CSTB-3	T-9D	CSTB-3	T-9D	CSTB-3S	T-9D	CSTB-3S	T-9D
40 - 44.99	LS1803.5RH	H2.5	AS0004-8	H2	CSTB-3	T-9D	CSTB-3	T-9D	CSTB-3S	T-9D	CSTB-3S	T-9D
45 - 47.99	LS1803.5RH	H2.5	AS0004-8	H2	CSTB-3	T-9D	CSTB-3.5	T-9D	CSTB-4S	T-15D	CSTB-3S	T-9D
48 - 51.99	LS1803.5RH	H2.5	AS0004-8	H2	CSTB-3.5	T-15D	CSTB-3.5	T-15D	CSTB-4S	T-15D	CSTB-3S	T-9D
52 - 54.99	LS1805RH	H3	AS0005-10	H2.5	CSTB-3.5	T-15D	CSTB-3.5	T-15D	CSTB-4S	T-15D	CSTB-3S	T-9D
55 - 57.99	LS1805RH	H3	AS0005-10	H2.5	CSTB-3.5	T-15D	CSTA-5	T-15D	CSTB-4S	T-15D	CSTB-3S	T-9D
58 - 59.99	LS1805RH	H3	AS0005-10	H2.5	CSTA-5	T-15D	CSTA-5	T-15D	CSTB-4S	T-15D	CSTB-3S	T-9D
60 - 63.99	LS1805RH	H3	AS0005-10	H2.5	CSTA-5	T-15D	CSTA-5	T-15D	CSTA-5S	T-15D	CSTB-3S	T-9D
64 - 67.99	LS1806RH	H4	AS0005-15	H2.5	CSTA-5	T-15D	CSTA-5	T-15D	CSTA-5S	T-15D	CSTB-3S	T-9D
68 - 77.99	LS1805RH	H3	AS0005-10	H2.5	LS1206	H3	LS1206	H3	CSTA-5SS	T-15D	CSTB-3S	T-9D
78 - 84.99	LS1806RH	H4	AS0005-15	H2.5	LS1206	H3	LS1206	H3	CSTA-5S	T-15D	CSTB-3S	T-9D
85 - 91.99	LS1806RH	H4	AS0006-15	H3	LS1206	H3	LS1206	H3	CSTA-5S	T-15D	CSTB-3S	T-9D
92 - 98.99	LS1806RH	H4	AS0005-15	H2.5	LS1206	H3	LS1206S	H3	CSTA-5SS	T-15D	CSTB-3S	T-9D
99 - 106.99	LS1806RH	H4	AS0006-15	H3	LS1206	H3	LS1206S	H3	LS1206S	H3	CSTA-5S	T-15D

Recommended clamping torque: please see page 054.

Indexable drill head with external 4-start thread for double tube system (DTS), diameters adjustable, tool diameter ø107.00 - ø168.99 mm, CICT = 5

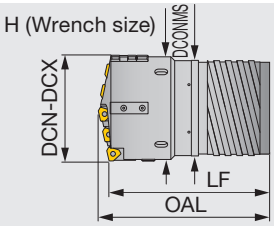

Non-standard products (to be supplied on request)

When ordering

KUDTS**E	-	xx.xx
Drill head		Diameter (mm)

e.g. Designation for tool diameter ø150 mm: **KUDTS23E-150.00**

Designation	DCN	DCX	CICT	Outer tube		Drill head			
				Designation	Dia. (mm)	OAL	LF	DCONMS	H
KUDTS19E-xx.xx	107.00	111.99	5	OT19	94	197	180	89	107
KUDTS20E-xx.xx	112.00	123.99	5	OT20	106	221	205	101	119
KUDTS21E-xx.xx	124.00	135.99	5	OT21	118	222	205	113	131
KUDTS22E-xx.xx	136.00	147.99	5	OT22	130	223	205	125	143
KUDTS23E-xx.xx	148.00	159.99	5	OT23	142	245	225	137	155
KUDTS24E-xx.xx	160.00	168.99	5	OT24	154	246	225	149	164

Before drilling operation, please adjust drill diameter. For diameter adjustment please see page 056.

INSERTS

Tool diameter DCN-DCX (mm)	Peripheral	Qty	Intermediate	Qty	Intermediate	Qty	Central	Qty
107.00 - 117.99	TPMX24**R...	1	TPMX17**R...	3	-		TPMX24**R...	1
118.00 - 135.99	TPMX24**R...	1	TPMX24**R...	3	-		TPMX24**R...	1
136.00 - 144.99	TPMX24**R...	1	TPMX24**R...	3	-		TPMX28**R...	1
145.00 - 150.99	TPMX24**R...	1	TPMX24**R...	2	TPMX28**R...	1	TPMX28**R...	1
151.00 - 156.99	TPMX28**R...	1	TPMX24**R...	2	TPMX28**R...	1	TPMX28**R...	1
157.00 - 162.99	TPMX28**R...	1	TPMX24**R...	1	TPMX28**R...	2	TPMX28**R...	1
163.00 - 168.99	TPMX28**R...	1	TPMX28**R...	3	-		TPMX28**R...	1

⊕ **Plus**: The drill diameter can be increased by up to 5 mm by using the Plus parts. A maximum expandable diameter is determined by the peripheral cartridge size used on the drill. See page 055 for details.
Drill heads come with cartridge, guide pad, filler, protector, sub guide pad and wrench, but do not include inserts.

Reference pages: Screws, Wrenches → 047, Inserts → 049 - 050, Guide pad → 052, Standard cutting conditions → 053, Drill tube (DTS) → 091

SPARE PARTS

Tool diameter DCN-DCX (mm)	Cartridge				
	Peripheral	Intermediate			Central
	Cartridge①	Cartridge②	Cartridge③	Cartridge④	Cartridge⑤
107.00 - 117.99	OZ402 - 43	IOZ402 - 32	IOZ402 - 32	IOZ402 - 32	IOZ402 - 43
118.00 - 135.99	OZ402 - 43	IOZ402 - 43	IOZ402 - 43	IOZ402 - 43	IOZ402 - 43
136.00 - 144.99	OZ402 - 43	IOZ402 - 43	IOZ402 - 43	IOZ402 - 43	IOZ402 - 63
145.00 - 150.99	OZ402 - 43	IOZ402 - 43	IOZ402 - 63	IOZ402 - 43	IOZ402 - 63
151.00 - 156.99	OZ402 - 63	IOZ402 - 43	IOZ402 - 63	IOZ402 - 43	IOZ402 - 63
157.00 - 162.99	OZ402 - 63	IOZ402 - 43	IOZ402 - 63	IOZ402 - 63	IOZ402 - 63
163.00 - 168.99	OZ402 - 63	IOZ402 - 63	IOZ402 - 63	IOZ402 - 63	IOZ402 - 63

SPARE PARTS

Tool diameter DCN-DCX (mm)	Guide pad							
	Guide pad		Filler		Protector		Sub guide pad	
	⑥	Qty	⑦	Qty	⑧	Qty	⑨	Qty
107.00 - 117.99	GP18	2	FL18 - M	1	GPT18 - M	2	CUG14 - M	1
118.00 - 135.99	GP18	2	FL18 - M	1	GPT18 - M	2	CUG14 - M	1
136.00 - 144.99	GP18	4	FL18 - M	1	GPT18 - M	4	CUG14 - M	1
145.00 - 150.99	GP18	4	FL18 - M	1	GPT18 - M	4	CUG14 - M	1
151.00 - 156.99	GP18	4	FL18 - M	1	GPT18 - M	4	CUG14 - M	1
157.00 - 162.99	GP18	4	FL18 - M	1	GPT18 - M	4	CUG14 - M	1
163.00 - 168.99	GP18	4	FL18 - M	1	GPT18 - M	4	CUG14 - M	1

See page 094 on handling of filler.

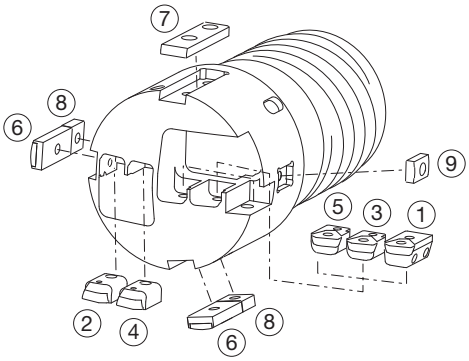

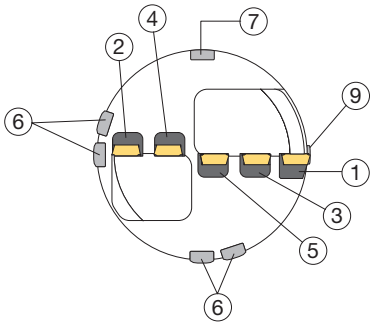

Part positions may vary depending on the drill size.

SCREWS, WRENCHES (CICT = 5)

Tool diameter DCN-DCX (mm)	Insert screw									
	Peripheral		Intermediate						Central	
	Cartridge①		Cartridge②		Cartridge③		Cartridge④		Cartridge⑤	
	Screw	Wrench	Screw	Wrench	Screw	Wrench	Screw	Wrench	Screw	Wrench
107.00 - 117.99	CSTB-4M	T-15D	CSTB-3.5D	T-9D	CSTB-3.5D	T-9D	CSTB-3.5D	T-9D	CSTB-4M	T-15D
118.00 - 135.99	CSTB-4M	T-15D	CSTB-4M	T-15D	CSTB-4M	T-15D	CSTB-4M	T-15D	CSTB-4M	T-15D
136.00 - 144.99	CSTB-4M	T-15D	CSTB-4M	T-15D	CSTB-4M	T-15D	CSTB-4M	T-15D	CSTB-5	T-20D
145.00 - 150.99	CSTB-4M	T-15D	CSTB-4M	T-15D	CSTB-5	T-20D	CSTB-4M	T-15D	CSTB-5	T-20D
151.00 - 156.99	CSTB-5	T-20D	CSTB-4M	T-15D	CSTB-5	T-20D	CSTB-4M	T-15D	CSTB-5	T-20D
157.00 - 162.99	CSTB-5	T-20D	CSTB-4M	T-15D	CSTB-5	T-20D	CSTB-5	T-20D	CSTB-5	T-20D
163.00 - 168.99	CSTB-5	T-20D	CSTB-5	T-20D	CSTB-5	T-20D	CSTB-5	T-20D	CSTB-5	T-20D

SCREWS, WRENCHES (CICT = 5)

Tool diameter DCN-DCX (mm)	Cartridge screw								Guide pad screw			
	Peripheral				Intermediate		Central		Guide pad / Filler / Protector		Sub guide pad	
	Cartridge①				Cartridge②-④		Cartridge⑤					
	Screw	Wrench	Adj. screw	Wrench	Screw	Wrench	Screw	Wrench	Screw	Wrench	Screw	Wrench
107.00 - 117.99	LS1806RH	H4	AS0005-15	H2.5	CSTA-5	T-15D	LS1206	H3	LS1206S	H3	CSTA-5S	T-15D
118.00 - 135.99	LS1806RH	H4	AS0005-15	H2.5	LS1206	H3	LS1206	H3	LS1206SSS	H3	CSTA-5S	T-15D
136.00 - 144.99	LS1806RH	H4	AS0005-15	H2.5	LS1206	H3	LS1206S	H3	LS1206SSS	H3	CSTA-5S	T-15D
145.00 - 150.99	LS1806RH	H4	AS0005-15	H2.5	LS1206	H3	LS1206S	H3	LS1206SSS	H3	CSTA-5S	T-15D
151.00 - 156.99	LS1806RH	H4	AS0006-15	H3	LS1206	H3L	LS1206S	H3L	LS1206S	H3	CSTA-5S	T-15D
157.00 - 162.99	LS1806RH	H4	AS0006-15	H3	LS1206	H3L	LS1206S	H3L	LS1206S	H3	CSTA-5S	T-15D
163.00 - 168.99	LS1806RH	H4	AS0006-15	H3	LS1206	H3L	LS1206S	H3L	LS1206S	H3	CSTA-5S	T-15D

Recommended clamping torque: please see page 054.

Indexable drill head with external 4-start thread for double tube system (DTS), diameters adjustable, tool diameter ø169.00 - ø183.99 mm, CICT = 7

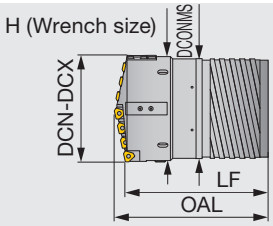

Non-standard products (to be supplied on request)

When ordering

KUDTS**E	-	xx.xx
Drill head		Diameter (mm)

e.g. Designation for tool diameter ø170 mm: **KUDTS24E-170.00**

Designation	DCN	DCX	CICT	Outer tube		Drill head			
				Designation	Dia. (mm)	OAL	LF	DCONMS	H
KUDTS24E-xx.xx	169.00	171.99	7	OT24	154	246	225	149	167
KUDTS25E-xx.xx	172.00	183.99	7	OT25	166	247	225	161	179

Before drilling operation, please adjust drill diameter. For diameter adjustment please see page 056.

INSERTS

Tool diameter DCN-DCX (mm)	Peripheral insert	Qty	Intermediate insert	Qty	Central insert	Qty
169.00 - 183.99	TPMX24**R...	1	TPMX24**R...	5	TPMX24**R...	1

⊕ **Plus**: The drill diameter can be increased by up to 5 mm by using the Plus parts. A maximum expandable diameter is determined by the peripheral cartridge size used on the drill. See page 048 for details.
Drill heads come with cartridge, guide pad, filler, protector, sub guide pad and wrench, but do not include inserts.

SPARE PARTS

Tool diameter DCN-DCX (mm)	Cartridge						
	Peripheral	Intermediate					Central
	Cartridge①	Cartridge②	Cartridge③	Cartridge④	Cartridge⑤	Cartridge⑥	Cartridge⑦
169.00 - 183.99	OZ402 - 43	IOZ402 - 43	IOZ402 - 43	IOZ402 - 43	IOZ402 - 43	IOZ402 - 43	IOZ402 - 43

SPARE PARTS

Tool diameter DCN-DCX (mm)	Guide pad							
	Guide pad		Filler		Protector		Sub guide pad	
	⑧	Qty	⑨	Qty	⑩	Qty	⑪	Qty
169.00 - 183.99	GP18	4	FL18 - M	1	GPT18 - M	4	CUG14 - M	1

See page 094 on handling of filler.

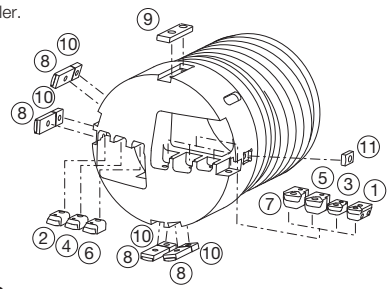

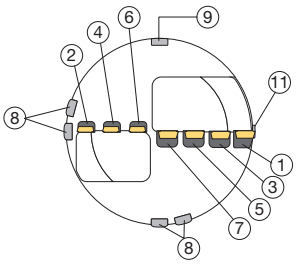

Part positions may vary depending on the drill size.

SCREWS, WRENCHES (CICT = 7)

Tool diameter DCN-DCX (mm)	Insert screw													
	Peripheral		Intermediate										Central	
	Cartridge①		Cartridge②		Cartridge③		Cartridge④		Cartridge⑤		Cartridge⑥		Cartridge⑦	
	Screw	Wrench	Screw	Wrench	Screw	Wrench	Screw	Wrench	Screw	Wrench	Screw	Wrench	Screw	Wrench
169.00 - 183.99	CSTB-4M	T-15D	CSTB-4M	T-15D	CSTB-4M	T-15D	CSTB-4M	T-15D	CSTB-4M	T-15D	CSTB-4M	T-15D	CSTB-4M	T-15D

SCREWS, WRENCHES (CICT = 7)

Tool diameter DCN-DCX (mm)	Cartridge screw								Guide pad screw			
	Peripheral				Intermediate		Central		Guide pad / Filler / Protector		Sub guide pad	
	Cartridge①				Cartridge②-⑥		Cartridge⑦					
	Screw	Wrench	Adj. screw	Wrench	Screw	Wrench	Screw	Wrench	Screw	Wrench	Screw	Wrench
169.00 - 183.99	LS1806RH	H4	AS0005-15	H2.5	LS1206	H3L	LS1206	H3L	LS1206SSS	H3	CSTA-5S	T-15D

Recommended clamping torque: please see page 054.

Reference pages: Inserts → 049 - 050, Guide pad → 052, Standard cutting conditions → 053, Drill tube (DTS) → 091

NPMX R-G, TPMX R-G(for general purpose)

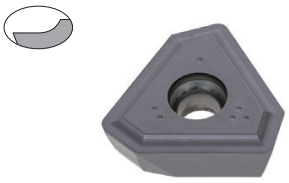

NPMX type

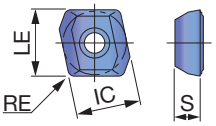

TPMX type

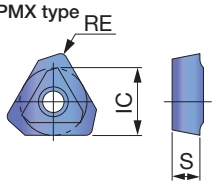

P	Steel	☆	★	☆	
M	Stainless		★	☆	
K	Cast iron		★	☆	
N	Non-ferrous		★	☆	
S	Superalloys		☆	★	
H	Hard materials		☆	★	

★ : First choice
☆ : Second choice

Designation	IC	S	Coated				RE	LE
			T9225	AH9130	AH8015	UC2220		
NPMX080308R-G	8	3.18	●	●		●	0.8	8.362
TPMX140308R-G	8.45	3.5	●	●	●	●	0.8	-
TPMX170408R-G	10.3	4	●	●	●	●	0.8	-
TPMX240512R-G	14.2	5.5	●	●	●	●	1.2	-
TPMX280716R-G	17	7.5	●	●	●	●	1.6	-

●: New
●: Line up

NPMX R-B, TPMX R-B(Provides good chip control in heat-resistant alloys)

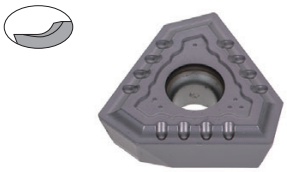

NPMX type

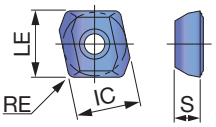

TPMX type

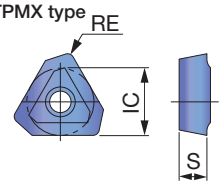

P	Steel	★	☆		
M	Stainless	★	☆		
K	Cast iron	★	☆		
N	Non-ferrous	★	☆		
S	Superalloys	☆	★		
H	Hard materials	☆	★		

★ : First choice
☆ : Second choice

Designation	IC	S	Coated			RE	LE
			AH9130	AH8015	UC2220		
NPMX080304R-B	8	3.18		●	●	0.4	8.362
TPMX140304R-B	8.45	3.5		●	●	0.4	-
TPMX140308R-B	8.45	3.5	●	●		0.8	-
TPMX170404R-B	10.3	4		●	●	0.4	-
TPMX170408R-B	10.3	4	●	●		0.8	-
TPMX240504R-B	14.2	5.5		●	●	0.4	-
TPMX240512R-B	14.2	5.5	●	●		1.2	-
TPMX280708R-B	17	7.5		●	●	0.8	-
TPMX280716R-B	17	7.5	●	●		1.6	-

●: New
●: Line up

TPMX R-BG(Provides good chip control in long-chipping steels)

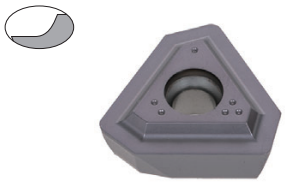

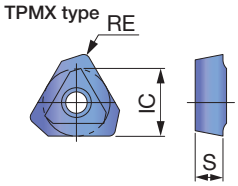

P	Steel	★	☆
M	Stainless	★	☆
K	Cast iron	★	☆
N	Non-ferrous	★	☆
S	Superalloys	☆	★
H	Hard materials	☆	★

★ : First choice
☆ : Second choice

Designation	IC	S	Coated			RE	LE
			AH9130	AH8015	UC2220		
TPMX170408R-BG	10.3	4	●	●	●	0.8	-
TPMX240512R-BG	14.2	5.5	●	●	●	1.2	-
TPMX280716R-BG	17	7.5	●	●	●	1.6	-

●: New
●: Line up

TPMX R-DT(Reduced cutting force)

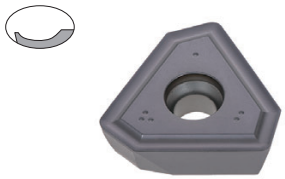

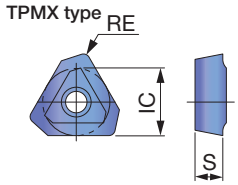

P	Steel	★	
M	Stainless	★	
K	Cast iron	★	
N	Non-ferrous	★	
S	Superalloys	☆	
H	Hard materials	☆	

★ : First choice
☆ : Second choice

Designation	IC	S	Coated		RE	LE
			AH9130	UC2220		
TPMX140308R-DT	8.45	3.5	●	●	0.8	-
TPMX170408R-DT	10.3	4	●	●	0.8	-
TPMX240512R-DT	14.2	5.5	●	●	1.2	-
TPMX280716R-DT	17	7.5	●	●	1.6	-

●: New
●: Line up

RECOMMENDED INSERT

ISO	Workpiece material	Hardness	First choice	Troubleshooting	
				Chipping resistance	Wear resistance
P	Low carbon steels (C ≤ 0.3%)	- 200 HB	G, AH9130	B, AH8015	G, T9225
	Carbon steels (C > 0.3%) Alloy steels	- 300 HB	G, AH9130	G, AH8015	G, T9225
	Low alloy steels	- 300 HB	G, AH9130	B, AH8015	G, T9225
	Alloy steels	- 300 HB	G, AH9130	G, AH8015	G, T9225
M	Stainless steel	- 200 HB	G, AH9130	B, AH8015	G, T9225
K	Grey cast irons	150 - 250 HB	G, AH9130	G, AH8015	G, T9225
	Ductile cast irons	150 - 250 HB	G, AH9130	G, AH8015	G, T9225
N	Aluminium alloy	-	G, AH9130	G, AH8015	G, T9225
S	Titanium alloys Heat-resistant alloys	- 40 HRC	B, AH8015	B, AH9130	G, T9225
H	Hardened steel	- 50 HRC	B, AH8015	B, AH9130	G, T9225

GUIDE PAD

GP-DC

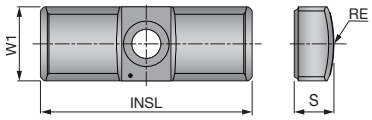

Double chamfer

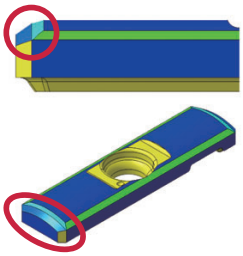

Designation	W1	INSL	Coated		S	RE	DCN	DCX
			FH3125	FH3135				
GP08-25-155-DC	8	25	●	●	4.5	15.5	38	44.99
GP10-35-200-DC	10	35	●	●	6	20	45	59.99
GP14-40-250-DC	14	40	●	●	7.5	25	60	98.99
GP18-40-300-DC	18	40	●	●	9	30	99	293.99

●: Line up
Package quantity = 5 pcs.

GP

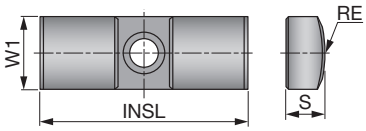

Single chamfer

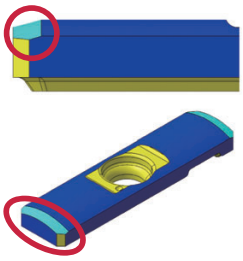

Designation	W1	INSL	Coated	S	RE	DCN	DCX
			F1122				
GP08	8	25	●	4.5	15.5	38	44.99
GP10	10	35	●	6	20	45	59.99

●: Line up
Package quantity = 5 pcs.

Grade recommendations

ISO	Oil coolant			Water based coolant		
	First choice	Second choice	Third choice	First choice	Second choice	Third choice
P	FH3125	F1122	FH3135	FH3135	FH3125	-
M	FH3135	FH3125	F1122	FH3135	FH3125	-
K	FH3125	F1122	FH3135	FH3135	FH3125	-
N	FH3125	F1122	FH3135	FH3135	FH3125	-
S	FH3135	FH3125	F1122	FH3135	FH3125	-
H	FH3135	FH3125	F1122	FH3135	FH3125	-

STANDARD CUTTING CONDITIONS

ISO	Workpiece materials	Cutting speed *Vc* (m/min)	Feed: *f* (mm/rev) ø38.00 - ø39.99	ø40.00 - ø51.99	ø52.00 - ø63.99	ø64.00 - ø84.99	ø85 -
P	Low carbon steel (C < 0.3) SS400, SM490, S25C, etc. St42-1, St52-3, C25, etc.	60 - 120	0.08 - 0.15	0.1 - 0.2	0.13 - 0.23	0.15 - 0.25	0.18 - 0.3
	Carbon steel (C > 0.3) S45C, S55C, etc. C45, C55, etc.	60 - 120	0.1 - 0.2	0.15 - 0.25	0.18 - 0.28	0.2 - 0.3	0.2 - 0.35
	Low alloy steel (C < 0.3) SCM415, etc. 18CrMo4, etc.	60 - 120	0.08 - 0.15	0.1 - 0.2	0.13 - 0.23	0.15 - 0.25	0.18 - 0.3
	Alloy steel (C > 0.3) SCM440, SCr420, etc. 42CrMo4, 20Cr4, etc.	60 - 100	0.1 - 0.2	0.15 - 0.25	0.18 - 0.28	0.2 - 0.3	0.2 - 0.35
M	Stainless steel (Austenitic) SUS304, SUS316, etc. X5CrNi18-9, X5CrNiMo17-12-3, etc.	60 - 110	0.08 - 0.15	0.1 - 0.2	0.13 - 0.23	0.15 - 0.25	0.18 - 0.3
	Stainless steel (Martensitic, Ferritic) SUS430, SUS416, etc. X6Cr17, X12CrS13, etc.	60 - 110	0.08 - 0.15	0.1 - 0.2	0.13 - 0.23	0.15 - 0.25	0.18 - 0.3
	Stainless steel (Precipitation hardening) SUS630, etc. X5CrNiCuNb16-4, etc.	60 - 110	0.08 - 0.15	0.1 - 0.2	0.13 - 0.23	0.15 - 0.25	0.18 - 0.3
K	Grey cast iron FC250, etc. 250, etc.	80 - 140	0.2 - 0.3	0.2 - 0.3	0.24 - 0.32	0.24 - 0.32	0.25 - 0.4
	Ductile cast iron FCD700, etc. 700-2, etc.	80 - 140	0.2 - 0.3	0.2 - 0.3	0.24 - 0.32	0.24 - 0.32	0.25 - 0.4
N	Aluminium alloys	100 - 200	0.08 - 0.2	0.1 - 0.25	0.13 - 0.28	0.15 - 0.3	0.18 - 0.33
S	Heat-resistant alloys Inconel 718, etc.	20 - 50	0.06 - 0.13	0.08 - 0.18	0.13 - 0.23	0.13 - 0.23	0.15 - 0.28
	Titanium alloys Ti-6Al-4V, etc.	30 - 60	0.08 - 0.15	0.1 - 0.2	0.13 - 0.23	0.15 - 0.25	0.18 - 0.3
H	Hardened steel ≥ 40HRC	30 - 80	0.06 - 0.13	0.08 - 0.18	0.13 - 0.23	0.13 - 0.23	0.15 - 0.28

Cutting parameters shown here are relating to the basic recommendations for cutting materials given.
Cutting conditions, material hardness and other relevant variables must be taken into considerations to determine the actual cutting parameters.

Replacement parts

Cartridges and inserts

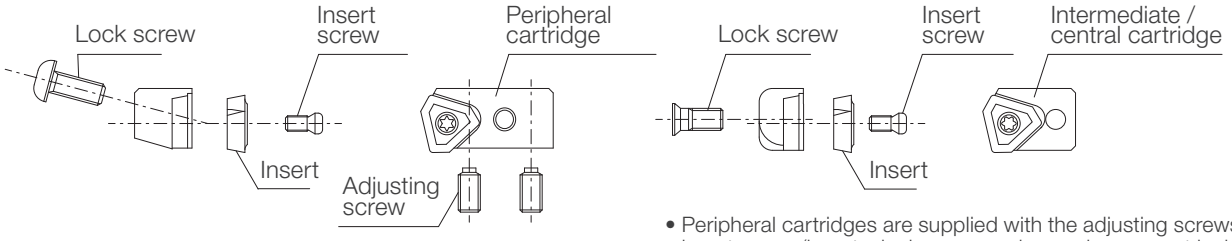

- Peripheral cartridges are supplied with the adjusting screws and insert screw (inserts, lock screw and wrenches are not included)
- Central and intermediate cartridges are supplied with insert screw (inserts, lock screw and wrenches are not included)

Peripheral inserts and accessories

Cartridge	Insert	Insert screw	Wrench	Adjusting screw	Wrench	Lock screw	Wrench
OZ05R	NPMX080308R-G	CSTB-2.2	T-7D	AS0003-5	H1.5	LS1803RH	H2
OZ402-04	TPMX140308R-G	CSTB-2.5	T-8D	AS0004-8	H2	LS1803.5RH	H2.5
OZ402-32	TPMX170408R-G	CSTB-3.5D	T-9D	AS0005-10	H2.5	LS1805RH	H3
OZ402-43	TPMX240512R-G	CSTB-4M	T-15D	AS0005-15	H2.5	LS1806RH	H4
OZ402-63	TPMX280716R-G	CSTB-5	T-20D	AS0006-15	H3	LS1806RH	H4

Central and intermediate inserts and accessories

Cartridge	Insert	Insert screw	Wrench	Lock screw	Wrench
IOZ05R	NPMX080308R-G	CSTB-2.2	T-7D	CSTB-3	T-9D
IOZ402-04	TPMX140308R-G	CSTB-2.5	T-8D	CSTB-3.5	T-15D
IOZ402-32	TPMX170408R-G	CSTB-3.5D	T-9D	CSTA-5	T-15D
IOZ402-43	TPMX240512R-G	CSTB-4M	T-15D	LS1206	H3 / H3L**
IOZ402-63	TPMX280716R-G	CSTB-5	T-20D	LS1206 / LS1206S*	H3 / H3L**

*LS1206S for central cartridge
**H3L for ø151.00 mm - ø320.00 mm

Guide pads and protectors

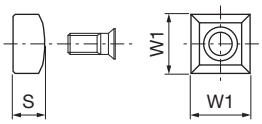

Guide pad	Lock screw	Wrench	Protector	Dimensions (mm) W1	Dimensions (mm) S	Lock screw	Wrench
GP08	CSTB-3S	T-9D	GPT08	8	4.5	CSTB-3S	T-9D
GP08-25-155-DC	CSTB-3S	T-9D	GPT08	8	4.5	CSTB-3S	T-9D
GP10	CSTB-4S	T-15D	GPT10	10	6	CSTB-4S	T-15D
GP10-35-200-DC	CSTB-4S	T-15D	GPT10	10	6	CSTB-4S	T-15D
GP14	CSTA-5S	T-15D	GPT14	14	7.5	CSTA-5S	T-15D
GP14-40-250-DC	CSTA-5S	T-15D	GPT14	14	7.5	CSTA-5S	T-15D
GP18	LS1206S / LS1206SSS ***	H3	GPT18-M	18	9	LS1206S	H3
GP18-40-300-DC	LS1206S / LS1206SSS ***	H3	GPT18-M	18	9	LS1206S	H3

***LS1206SSS for dimensional guide pad
(for diameter ø118.00 - ø150.99, ø169.00 - ø208.99 and ø233.00 - ø247.99 mm)

Recommended clamping torque

Screw	(N·m)
CSTA-5	3.5
CSTA-5S	3.5
CSTB-2.2	1
CSTB-2.5	1.3
CSTB-3	2.3
CSTB-3S	2.3

Screw	(N·m)
CSTB-3.5	3.5
CSTB-3.5D	2.3
CSTB-4M	3.5
CSTB-4S	3.5
CSTB-5	5
LS1206	3

Screw	(N·m)
LS1206S	3
LS1206SSS	3
LS1803RH	2.2
LS1803.5RH	2.2
LS1805RH	3
LS1806RH	5

Replacement parts

Sub guide pad

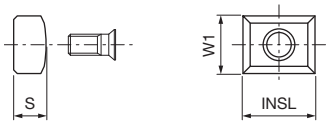

Guide pad	Dimensions (mm)			Lock screw	Wrench
	W1	S	INSL		
CUG08	8	4.5	10	CSTB-3S	T-9D
CUG10	10	5	10	CSTB-3S	T-9D
CUG14-M	14	7	20	CSTA-5S	T-15D

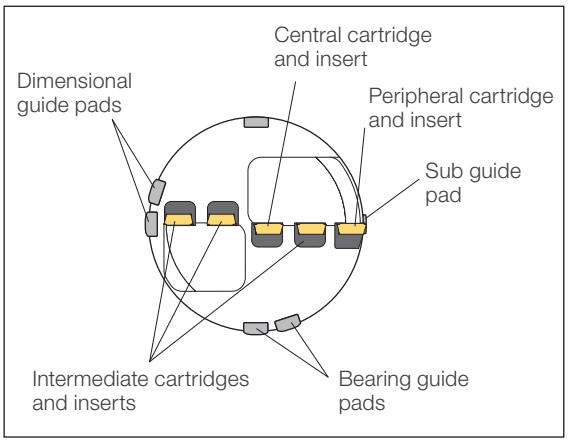

⊕Plus Plus parts

The use of the Plus parts allows the drill diameter to increase by up to 5 mm, in 1 mm increments.
The diameter is increased by replacing the peripheral cartridges.
Ex. The drill head diameter with OZ402-32 peripheral cartridge can be increased by up to 4 mm,
while the drill head diameter with OZ402-43 can be increased by up to 5 mm.

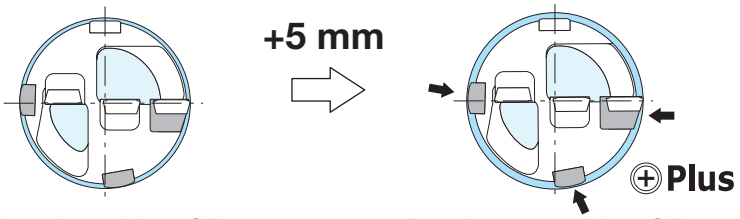

Peripheral cartridge: OZ402-43
Guide pads: GP14

Peripheral cartridge: OZ402-43+5
Guide pads: GP14-40-275-DC+5 FH3125

Note:
When the peripheral cartridge is changed, the guide pads must also be changed to the matching Plus parts.

Plus cartridge - OZ type

	+1 mm	+2 mm	+3 mm	+4 mm	+5 mm
OZ05R	OZ05R+1 ●	OZ05R+2 ●	-	-	-
OZ402-04	OZ402-04+1 ●	OZ402-04+2 ●	OZ402-04+3 ●	-	-
OZ402-32	OZ402-32+1 ●	OZ402-32+2 ●	OZ402-32+3 ●	OZ402-32+4 ●	-
OZ402-43	OZ402-43+1 ●	OZ402-43+2 ●	OZ402-43+3 ●	OZ402-43+4 ●	OZ402-43+5 ●
OZ402-63	OZ402-63+1 ●	OZ402-63+2 ●	OZ402-63+3 ●	OZ402-63+4 ●	OZ402-63+5 ●

Ordering example: OZ402-04+2, 10 pcs

Plus cartridge - OX type

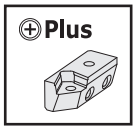

	+1 mm	+2 mm	+3 mm	+4 mm	+5 mm
OX04R	OX04R+1 ○	OX04R+2 ○	OX04R+3 ○	-	-
OX32R	OX32R+1 ○	OX32R+2 ○	OX32R+3 ○	OX32R+4 ○	-
OX43R	OX43R+1 ○	OX43R+2 ○	OX43R+3 ○	OX43R+4 ○	OX43R+5 ○
OX63R	OX63R+1 ○	OX63R+2 ○	OX63R+3 ○	OX63R+4 ○	OX63R+5 ○

Ordering example: OX32R+2, 10 pcs
Use OX cartridges when using the UNIDEX series for boring operations. OX has a smaller entry angel than OZ, allowing better hole quality.
OX and OZ can be mounted in the same pocket for the peripheral cartridge.

Plus guide pad

	+1 mm	Grade FH3125	+2 mm	Grade FH3125	+3 mm	Grade FH3125	+4 mm	Grade FH3125	+5 mm	Grade FH3125
GP08	GP08-25-160-DC+1	●	GP08-25-165-DC+2	●	GP08-25-170-DC+3	●	-		-	
GP10	GP10-35-205-DC+1	●	GP10-35-210-DC+2	●	GP10-35-215-DC+3	●	GP10-35-220-DC+4	●	-	
GP14	GP14-40-255-DC+1	●	GP14-40-260-DC+2	●	GP14-40-265-DC+3	●	GP14-40-270-DC+4	●	GP14-40-275-DC+5	●
GP18	GP18-40-305-DC+1	●	GP18-40-310-DC+2	●	GP18-40-315-DC+3	●	GP18-40-320-DC+4	●	GP18-40-325-DC+5	●

Ordering example: GP08-25-165-DC+2 FH3125, 10 pcs

● : New
● : Line up
○ : To be supplied on request

Drill diameter calibration

Please note that inserts must be ordered separately as they are not included in the UNIDEX tool.
To achieve successful drilling with UNIDEX deep hole drill, it is critical to set and maintain adequate clearance between the tool diameter and guide pad diameter. After installing inserts, make sure to properly calibrate the tool diameter by following the steps outlined below.
Always proceed with the same calibration procedures when the inserts are indexed or exchanged. This is especially important when using inserts from a new batch as they may greatly deviate the tool diameter.

⚠ Poor hole precision, abnormal wear of inserts or guide pads, or serious tool damage may occur if the insert and guide pad diameters are not properly calibrated.

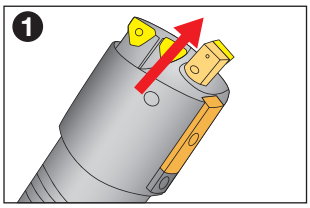

❶ Remove the intermediate cartridge to avoid interference with the guide screw.

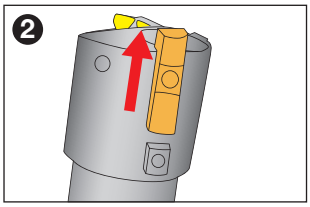

❷ Move the dimensional guide pad to the measuring position parallel to the peripheral insert.

❷-1 Unscrew the lock screw of the dimensional guide pad and slide the dimensional guide pad to the measuring position.

❷-2 Tighten the lock screw to fix the guide pad.

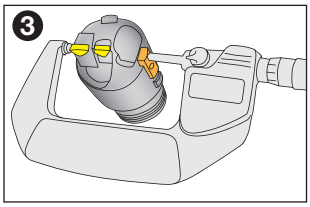

❸ Measure the diameter with a micrometer.
Use an h8 tolerance for the tool diameter unless otherwise required.

If the diameter at this point is out of tolerance, go to Step ❹.
If the diameter at this point is in tolerance, go to Step ❺.

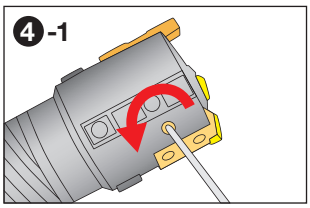

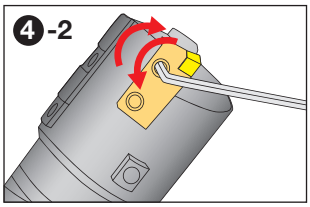

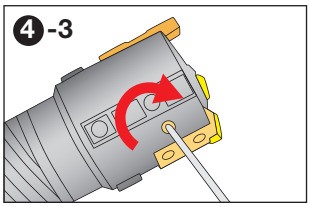

❹ Adjust the peripheral cartridge

❹-1 First loosen the lock screw of the peripheral cartridge and then slightly re-tighten the lock screw.

❹-2 Adjust the cartridge by loosening or tightening the two adjusting screws on the cartridge and measure the diameter using a micrometer. Repeat steps until the required diameter is attained.

❹-3 After attaining the required diameter, securely tighten the lock screw to fix the cartridge.

❹-4 Measure the diameter with a micrometer to assure that the required diameter is attained. If not attained, start from Step ❹-1.

⚠ Make sure that the two adjusting screws on the peripheral cartridge are tightened. If the tool is used with either of the screws left loosened, the cartridge will move during machining due to cutting forces and may cause damage.

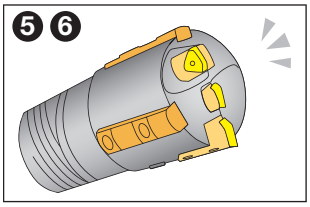

❺ Return the dimensional guide pad to the original position and tighten the lock screw.

❻ Replace the intermediate cartridge to the original position and tighten the lock screw.

⚠ Whenever inserts are indexed or exchanged, always make sure that all the screws on the drill are securely tightened. If chatter occurred during machining, it may cause the screws to be loosened.

Setting guidelines for cutting loads, fluid pressure and flow rate during STS operation

STS Single Tube System

Net power

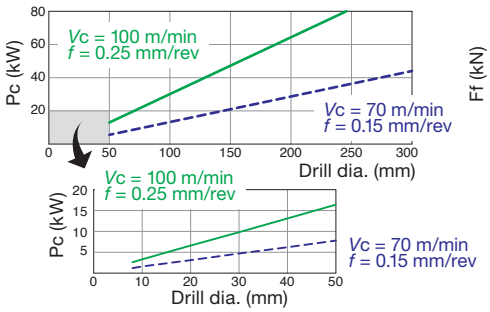

Feed force

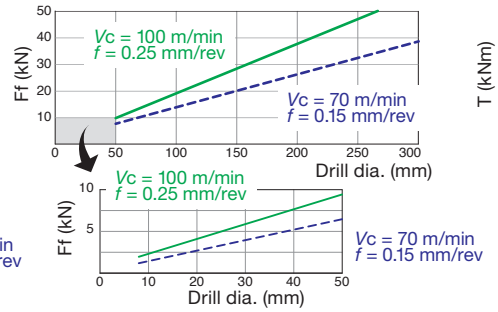

Torque

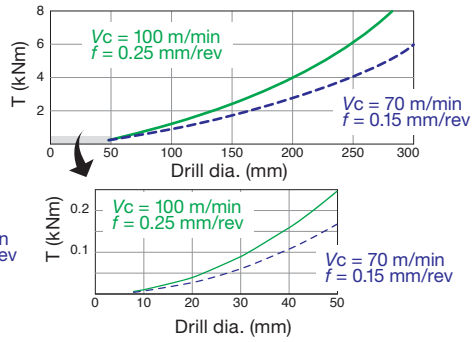

Coolant pressure

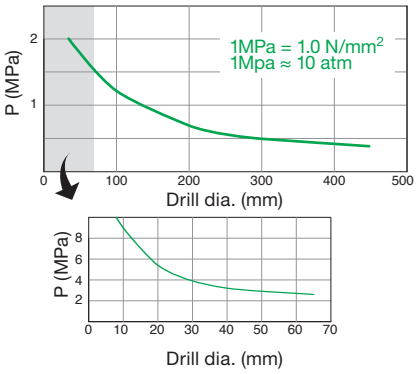

Coolant volume

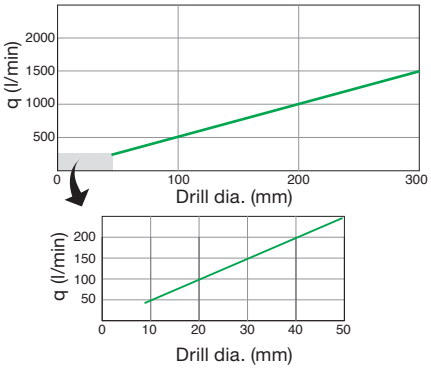

Setting guidelines for cutting loads, fluid pressure and flow rate during DTS operation

DTS Double Tube System

Net power

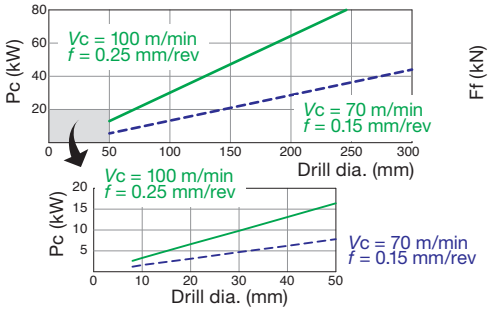

Feed force

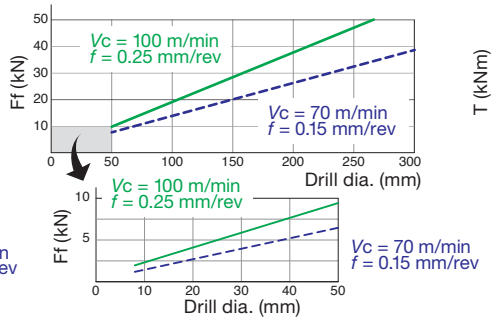

Torque

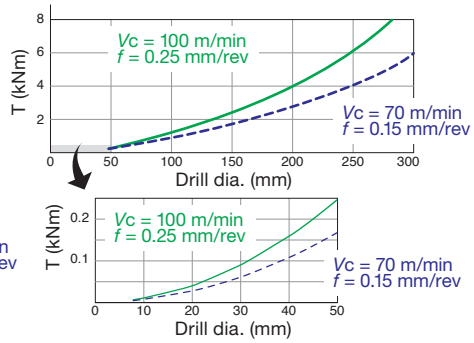

Coolant pressure

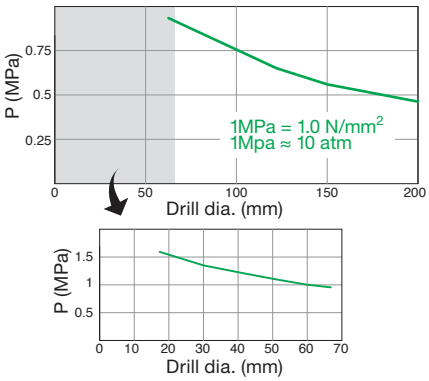

Coolant volume

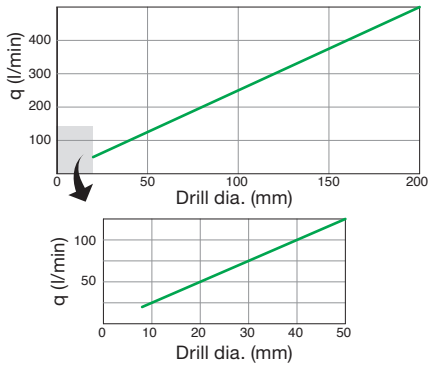

The above values should not be used as the exact recommendations. They may need modification depending on the machining conditions, materials, etc.

Counterboring

COUNTERBORING HEAD STS

COUNTERBORING HEAD STS-EX

Counterboring head with external 4-start thread for single tube system (STS), diameters adjustable, tool diameter ø25.00 - ø39.99 mm

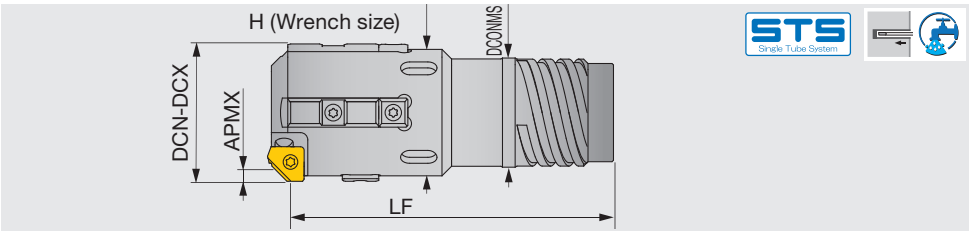

Non-standard products (to be supplied on request)

When ordering

KUSTR**E	-	xx.xx
Drill head		Diameter (mm)

e.g. Designation for tool diameter ø30.00 mm: **KUSTR04E-30.00**

Designation	DCN	DCX	APMX	Drill tube		LF	Drill head	H
				Designation	Dia.(mm)		DCONMS	
KUSTR02E-xx.xx	25.00	26.40	2.8	ST02	22	72.5	19.5	24
KUSTR03E-xx.xx	26.41	28.70	2.8	ST03	24	72.5	21	26
KUSTR04E-xx.xx	28.71	31.00	2.8	ST04	26	72.5	23.5	28
KUSTR05E-xx.xx	31.01	33.30	2.8	ST05	28	75.5	25.5	31
KUSTR06E-xx.xx	33.31	36.20	2.8	ST06	30	75.5	28	34
KUSTR07E-xx.xx	36.21	39.60	2.8	ST07	33	90.5	30	37
KUSTR08E-xx.xx	39.61	39.99	2.8	ST08	36	90.5	33	37

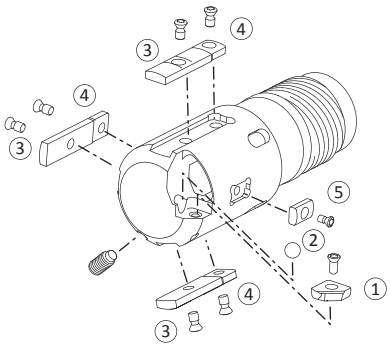

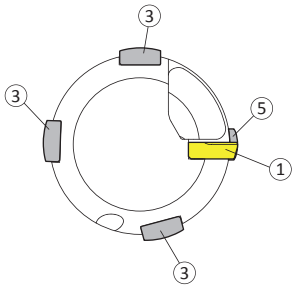

Cartridge, insert SPARE PARTS

Tool diameter DCN-DCX (mm)	Insert ①	Qty	Insert screw	Qty	Wrench	Adjust ball ②	Qty	Adjust screw	Qty	Wrench
25.00 - 29.99	IIS160-45	1	CSTANO3	1	T-9D	BALL5	1	AS0005-5	1	H2.5
30.00 - 37.99	IIS160-45	1	CSTANO3	1	T-9D	BALL5	1	AS0005-5	1	H2.5
38.00 - 39.99	IIS160-45	1	CSTANO3	1	T-9D	BALL5	1	AS0005-5	1	H2.5

Guide pad SPARE PARTS

Tool diameter DCN-DCX (mm)	Guide pad ③	Qty	Lock screw	Qty	Wrench	Protector ④	Qty	Lock screw	Qty	Wrench	Sub guide ⑤	Qty	Lock screw	Qty	Wrench
25.00 - 29.99	GP06	2	CSTB2.2S	2	T-7D	-		-		-	CUG06	1	CSTB2.2S	1	T-7D
30.00 - 37.99	GP07	3	CSTB3S	3	T-9D	-		-		-	CUG06	1	CSTB2.2S	1	T-7D
38.00 - 39.99	GP08	3	CSTB3S	3	T-9D	GPT08	3	CSTB3S	3	T-9D	CUG08	1	CSTB3S	1	T-9D

Drill heads come complete with: adjust ball, guide pads, protectors, sub guide pad and wrenches - but less inserts.

Reference pages: Inserts → 064, Guide pads → 066,
Standard cutting conditions → 065, Drill tube (STS) → 082

COUNTERBORING HEAD STS

COUNTERBORING HEAD STS-EX

Counterboring head with external 4-start thread for single tube system (STS), diameters adjustable, tool diameter ø40.00 - ø291.99 mm

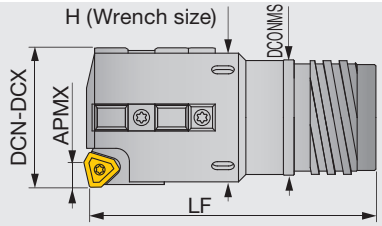

This figure shows OZ cartridge.

Non-standard products (to be supplied on request)

When ordering

KUSTR**E	-	xx.xx
Drill head		Diameter (mm)

e.g. Designation for tool diameter ø100.00 mm with OZ cartridge: **KUSTR19E-100.00**, OX cartridge: **KUSTR19E-100.00-OX**

Designation	DCN	DCX	APMX		Drill tube			Drill head	
			OZ	OX	Designation	Dia.(mm)	LF	DCONMS	H
KUSTR08E-xx.xx	40.00	43.00	6.4	4	ST08	36	90	33	40
KUSTR09E-xx.xx	43.01	47.00	6.4	4	ST09	39	95	36	43
KUSTR10E-xx.xx	47.01	51.70	6.4	4	ST10	43	100	39	48
KUSTR11E-xx.xx	51.71	51.99	6.4	4	ST11	47	100	43	52
KUSTR11E-xx.xx	52.00	56.20	7.2	4.8	ST11	47	100	43	52
KUSTR12E-xx.xx	56.21	60.60	7.2	4.8	ST12	51	110	47	57
KUSTR13E-xx.xx	60.61	65.00	7.2	4.8	ST13	56	110	51	61
KUSTR14E-xx.xx	65.00	66.99	7.2	4.8	ST14	56	150	52	63
KUSTR15E-xx.xx	67.00	72.99	10.4	6.4	ST15	62	150	58	69
KUSTR16E-xx.xx	73.00	79.99	10.4	6.4	ST16	68	150	63	76
KUSTR17E-xx.xx	80.00	86.99	10.4	6.4	ST17	75	180	70	83
KUSTR18E-xx.xx	87.00	99.99	10.4	6.4	ST18	82	180	77	96
KUSTR19E-xx.xx	100.00	111.99	10.4	6.4	ST19	94	180	89	107
KUSTR20E-xx.xx	112.00	123.99	10.4	6.4	ST20	106	205	101	119
KUSTR21E-xx.xx	124.00	135.99	10.4	6.4	ST21	118	205	113	131
KUSTR22E-xx.xx	136.00	147.99	10.4	6.4	ST22	130	205	125	143
KUSTR23E-xx.xx	148.00	159.99	10.4	6.4	ST23	142	225	137	155
KUSTR24E-xx.xx	160.00	171.99	10.4	6.4	ST24	154	225	149	167
KUSTR25E-xx.xx	172.00	183.99	10.4	6.4	ST25	166	225	161	179
KUSTR26E-xx.xx	184.00	195.99	10.4	6.4	ST26	178	245	173	191
KUSTR27E-xx.xx	196.00	207.99	10.4	6.4	ST27	190	245	185	203
KUSTR28E-xx.xx	208.00	219.99	10.4	6.4	ST28	202	245	197	215
KUSTR29E-xx.xx	220.00	231.99	10.4	6.4	ST29	214	265	208	227
KUSTR30E-xx.xx	232.00	243.99	10.4	6.4	ST30	226	265	220	239
KUSTR31E-xx.xx	244.00	255.99	10.4	6.4	ST31	238	265	232	251
KUSTR32E-xx.xx	256.00	267.99	10.4	6.4	ST32	250	290	244	263
KUSTR33E-xx.xx	268.00	279.99	10.4	6.4	ST33	262	290	256	275
KUSTR34E-xx.xx	280.00	291.99	10.4	6.4	ST34	274	290	268	287

Reference pages: Spare parts → 056, Inserts → 044, 063, Guide pads → 066, Standard cutting conditions → 065, Drill tube (STS) → 082

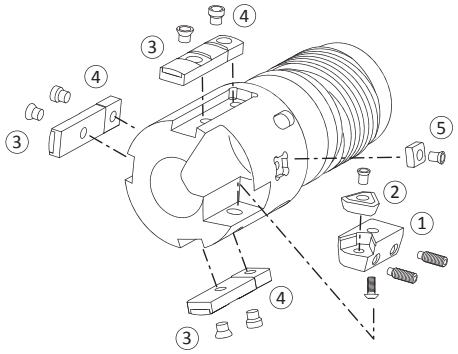

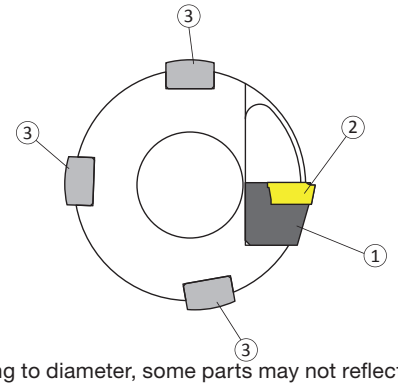

Note:
According to diameter, some parts may not reflect the picture above.

Cartridge, insert SPARE PARTS

OZ type (For large depth of cut)

Tool diameter DCN-DCX (mm)	Cartridge ①	Qty	Insert ②	Qty	Insert screw	Qty	Wrench	Adjust screw	Qty	Wrench	Lock screw	Qty	Wrench
40.00 - 45.99	OZ402-04	1	TPMX140308R	1	CSTB2.5	1	T-8D	AS0004-8	2	H2	LS1803.5RH	1	H2.5
46.00 - 51.99	OZ402-04	1	TPMX140308R	1	CSTB2.5	1	T-8D	AS0004-8	2	H2	LS1803.5RH	1	H2.5
52.00 - 59.99	OZ402-32	1	TPMX170408R	1	CSTB3.5D	1	T-9D	AS0005-10	2	H2.5	LS1805RH	1	H3
60.00 - 66.99	OZ402-32	1	TPMX170408R	1	CSTB3.5D	1	T-9D	AS0005-10	2	H2.5	LS1805RH	1	H3
67.00 - 99.99	OZ402-43	1	TPMX240512R	1	CSTB4M	1	T-15D	AS0005-15	2	H2.5	LS1806RH	1	H4
100.00 - 135.99	OZ402-43	1	TPMX240512R	1	CSTB4M	1	T-15D	AS0005-15	2	H2.5	LS1806RH	1	H4
136.00 - 291.99	OZ402-43	1	TPMX240512R	1	CSTB4M	1	T-15D	AS0005-15	2	H2.5	LS1806RH	1	H4

OX type (For small depth of cut)

Tool diameter DCN-DCX (mm)	Cartridge ①	Qty	Insert ②	Qty	Insert screw	Qty	Wrench	Adjust screw	Qty	Wrench	Lock screw	Qty	Wrench
40.00 - 45.99	OX04R	1	TPMX140308L	1	CSTB2.5	1	T-8D	AS0004-8	2	H2	LS1803.5RH	1	H2.5
46.00 - 51.99	OX04R	1	TPMX140308L	1	CSTB2.5	1	T-8D	AS0004-8	2	H2	LS1803.5RH	1	H2.5
52.00 - 59.99	OX32R	1	TPMX170408L	1	CSTB3.5D	1	T-9D	AS0005-10	2	H2.5	LS1805RH	1	H3
60.00 - 66.99	OX32R	1	TPMX170408L	1	CSTB3.5D	1	T-9D	AS0005-10	2	H2.5	LS1805RH	1	H3
67.00 - 99.99	OX43R	1	TPMX240512L	1	CSTB4M	1	T-15D	AS0005-15	2	H2.5	LS1806RH	1	H4
100.00 - 135.99	OX43R	1	TPMX240512L	1	CSTB4M	1	T-15D	AS0005-15	2	H2.5	LS1806RH	1	H4
136.00 - 291.99	OX43R	1	TPMX240512L	1	CSTB4M	1	T-15D	AS0005-15	2	H2.5	LS1806RH	1	H4

Guide pad SPARE PARTS

Tool diameter DCN-DCX (mm)	Guide pad ③	Qty	Lock screw	Qty	Wrench	Protector ④	Qty	Lock screw	Qty	Wrench	Sub guide pad ⑤	Qty	Lock screw	Qty	Wrench
40.00 - 45.99	GP08	3	CSTB3S	3	T-9D	GPT08	3	CSTB3S	3	T-9D	CUG08	1	CSTB3S	1	T-9D
46.00 - 51.99	GP10	3	CSTB4S	3	T-15D	GPT10	3	CSTB4S	3	T-15D	CUG08	1	CSTB3S	1	T-9D
52.00 - 59.99	GP10	3	CSTB4S	3	T-15D	GPT10	3	CSTB4S	3	T-15D	CUG08	1	CSTB3S	1	T-9D
60.00 - 66.99	GP14	3	CSTA5S	3	T-15D	GPT14	3	CSTA5S	3	T-15D	CUG10	1	CSTB3S	1	T-9D
67.00 - 99.99	GP14	3	CSTA5S	3	T-15D	GPT14	3	CSTA5S	3	T-15D	CUG10	1	CSTB3S	1	T-9D
100.00 - 135.99	GP18	3	LS1206S	3	H3	GPT18-M	3	LS1206S	3	H3	CUG14-M	1	CSTA5S	1	T-15D
136.00 - 291.99	GP18	5	LS1206S	5	H3	GPT18-M	5	LS1206S	5	H3	CUG14-M	1	CSTA5S	1	T-15D

- Plus (+) spare parts will enlarge drill diameter up to 5 mm depending on cartridge size. (see page 067 for details)
- Drill heads come complete with: cartridge, guide pads, protectors, sub guide pad and wrenches - but less inserts.

COUNTERBORING HEAD STS

COUNTERBORING HEAD STS-IN

Counterboring head with internal single start thread for single tube system (STS), diameters adjustable, tool diameter ø25.00 - ø39.99 mm

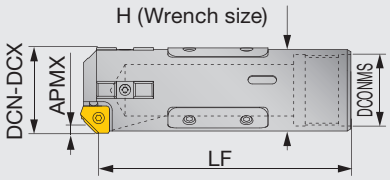

Non-standard products (to be supplied on request)

When ordering

KUSTR**	-	xx.xx
Drill head		Diameter (mm)

e.g. Designation for tool diameter ø30.00 mm: **KUSTR26-30.00**

Designation	DCN	DCX	APMX	Drill tube		Drill head		
				Designation	Dia.(mm)	LF	DCONMS	H
KUSTR22-xx.xx	25.00	26.99	2.8	UB22	22	110.5	20	24
KUSTR24-xx.xx	27.00	29.99	2.8	UB24	24	110.5	22	27
KUSTR26-xx.xx	30.00	31.99	2.8	UB26	26	110.5	24	29
KUSTR28-xx.xx	32.00	33.99	2.8	UB28	28	110.5	26	31
KUSTR30-xx.xx	34.00	36.99	2.8	UB30	30	135.5	27	34
KUSTR33-xx.xx	37.00	39.99	2.8	UB33	33	135.5	30	37

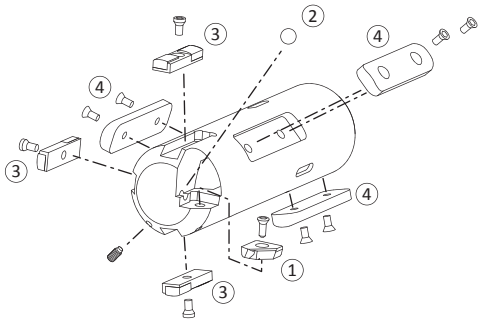

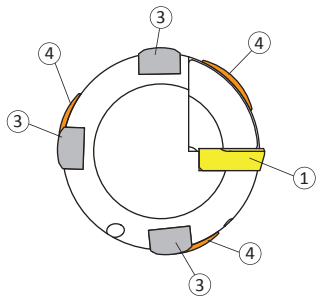

Note:
According to diameter, some parts may not reflect the picture above.

Cartridge, insert SPARE PARTS

Tool diameter DCN-DCX (mm)	Insert ①	Qty	Insert screw	Qty	Wrench	Adjust ball ②	Qty	Adjust screw	Qty	Wrench
25.00 - 29.99	IIS160-45	1	CSTANO3	1	T-9D	BALL5	1	AS0005-5	1	H2.5
30.00 - 36.99	IIS160-45	1	CSTANO3	1	T-9D	BALL5	1	AS0005-5	1	H2.5
37.00 - 39.99	IIS160-45	1	CSTANO3	1	T-9D	BALL5	1	AS0005-5	1	H2.5

Guide pad SPARE PARTS

Tool diameter DCN-DCX (mm)	Guide pad ③	Qty	Lock screw	Qty	Wrench	Resin guide pad* ④	Qty	Lock screw	Qty	Wrench
25.00 - 29.99	GP06	2	CSTB3S	2	T-9D	RRG10	3	LS0902.5-6	6	+ No.1
30.00 - 36.99	GP07	3	CSTB3S	3	T-9D	RRG12	3	LS0903-8	6	H2
37.00 - 39.99	GP08	3	CSTB3S	3	T-9D	RRG15	3	LS0904-10	6	H2.5

Drill heads come complete with: adjust ball, guide pads, protectors, sub guide pad and wrenches - but less inserts.

Reference pages: Inserts → 064, Guide pads → 066,
Standard cutting conditions → 065, Drill tube (STS) → 084

COUNTERBORING HEAD STS

COUNTERBORING HEAD STS-IN

Counterboring head with internal single start thread for single tube system (STS), diameters adjustable, tool diameter ø40.00 - ø239.99 mm

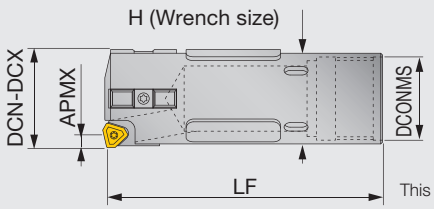

This figure shows OZ cartridge.

Non-standard products (to be supplied on request)

When ordering

KUSTR**	-	xx.xx
Drill head		Diameter (mm)

e.g. Designation for tool diameter ø100.00 mm with OZ cartridge: **KUSTR94-100.00**, OX cartridge: **KUSTR94-100.00-OX**

Designation	DCN	DCX	APMX		Drill tube			Drill head	
			OZ	OX	Designation	Dia.(mm)	LF	DCONMS	H
KUSTR36-xx.xx	40.00	43.99	6.4	4	UB36	36	135	33	41
KUSTR39-xx.xx	44.00	46.99	6.4	4	UB39	39	135	37	43
KUSTR43-xx.xx	47.00	51.99	6.4	4	UB43	43	145	41	48
KUSTR47-xx.xx	52.00	56.99	7.2	4.8	UB47	47	145	44	53
KUSTR51-xx.xx	57.00	60.99	7.2	4.8	UB51	51	170	49	57
KUSTR56-xx.xx	61.00	66.99	7.2	4.8	UB56	56	170	53	64
KUSTR56-xx.xx	67.00	67.99	10.4	6.4	UB56	56	170	53	64
KUSTR62-xx.xx	68.00	74.99	10.4	6.4	UB62	62	170	59	71
KUSTR68-xx.xx	75.00	80.99	10.4	6.4	UB68	68	205	65	77
KUSTR75-xx.xx	81.00	90.99	10.4	6.4	UB75	75	215	71	87
KUSTR82-xx.xx	91.00	98.99	10.4	6.4	UB82	82	225	79	95
KUSTR94-xx.xx	99.00	110.99	10.4	6.4	UB94	94	235	90	106
KUSTR106-xx.xx	111.00	122.99	10.4	6.4	UB106	106	235	102	118
KUSTR118-xx.xx	123.00	134.99	10.4	6.4	UB118	118	265	114	130
KUSTR130-xx.xx	135.00	148.99	10.4	6.4	UB130	130	265	126	144
KUSTR142-xx.xx	149.00	161.99	10.4	6.4	UB142	142	265	139	157
KUSTR154-xx.xx	162.00	173.99	10.4	6.4	UB154	154	285	151	169
KUSTR166-xx.xx	174.00	185.99	10.4	6.4	UB166	166	285	163	181
KUSTR178-xx.xx	186.00	197.99	10.4	6.4	UB178	178	310	175	193
KUSTR190-xx.xx	198.00	209.99	10.4	6.4	UB190	190	310	187	205
KUSTR202-xx.xx	210.00	221.99	10.4	6.4	UB202	202	320	199	217
KUSTR214-xx.xx	222.00	233.99	10.4	6.4	UB214	214	325	211	229
KUSTR226-xx.xx	234.00	245.99	10.4	6.4	UB226	226	325	223	241
KUSTR238-xx.xx	246.00	257.99	10.4	6.4	UB238	238	325	235	253
KUSTR250-xx.xx	258.00	269.99	10.4	6.4	UB250	250	360	245	265
KUSTR262-xx.xx	270.00	281.99	10.4	6.4	UB262	262	360	259	277
KUSTR274-xx.xx	282.00	293.99	10.4	6.4	UB274	274	360	271	289

Reference pages: Spare parts → 059, Inserts → 044, 063, Guide pads → 066, Standard cutting conditions → 065, Drill tube (STS) → 084

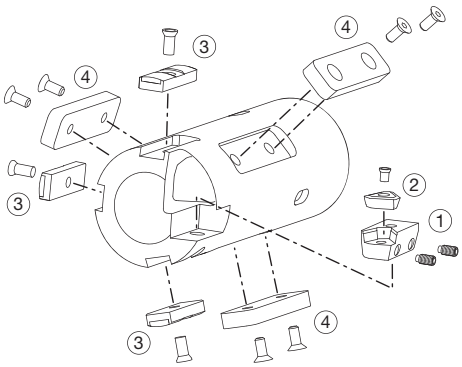

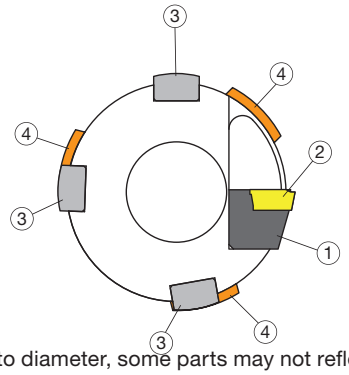

Note:
According to diameter, some parts may not reflect the picture above.

Cartridge, insert SPARE PARTS

OZ type (For large depth of cut)

Tool diameter DCN-DCX (mm)	Cartridge ①	Qty	Insert ②	Qty	Insert screw	Qty	Wrench	Adjust screw	Qty	Wrench	Lock screw	Qty	Wrench
40.00 - 45.99	OZ402-04	1	TPMX140308R	1	CSTB2.5	1	T-8D	AS0004-8	2	H2	LS1803.5RH	1	H2.5
46.00 - 51.99	OZ402-04	1	TPMX140308R	1	CSTB2.5	1	T-8D	AS0004-8	2	H2	LS1803.5RH	1	H2.5
52.00 - 56.99	OZ402-32	1	TPMX170408R	1	CSTB3.5D	1	T-9D	AS0005-10	2	H2.5	LS1805RH	1	H3
57.00 - 59.99	OZ402-32	1	TPMX170408R	1	CSTB3.5D	1	T-9D	AS0005-10	2	H2.5	LS1805RH	1	H3
60.00 - 66.99	OZ402-32	1	TPMX170408R	1	CSTB3.5D	1	T-9D	AS0005-10	2	H2.5	LS1805RH	1	H3
67.00 - 80.99	OZ402-43	1	TPMX240512R	1	CSTB4M	1	T-15D	AS0005-15	2	H2.5	LS1806RH	1	H4
81.00 - 90.99	OZ402-43	1	TPMX240512R	1	CSTB4M	1	T-15D	AS0005-15	2	H2.5	LS1806RH	1	H4
91.00 - 99.99	OZ402-43	1	TPMX240512R	1	CSTB4M	1	T-15D	AS0005-15	2	H2.5	LS1806RH	1	H4
100.00 - 135.99	OZ402-43	1	TPMX240512R	1	CSTB4M	1	T-15D	AS0005-15	2	H2.5	LS1806RH	1	H4
136.00 - 293.99	OZ402-43	1	TPMX240512R	1	CSTB4M	1	T-15D	AS0005-15	2	H2.5	LS1806RH	1	H4

OX type (For small depth of cut)

Tool diameter DCN-DCX (mm)	Cartridge ①	Qty	Insert ②	Qty	Insert screw	Qty	Wrench	Adjust screw	Qty	Wrench	Lock screw	Qty	Wrench
40.00 - 45.99	OX04R	1	TPMX140308L	1	CSTB2.5	1	T-8D	AS0004-8	2	H2	LS1803.5RH	1	H2.5
46.00 - 51.99	OX04R	1	TPMX140308L	1	CSTB2.5	1	T-8D	AS0004-8	2	H2	LS1803.5RH	1	H2.5
52.00 - 56.99	OX32R	1	TPMX170408L	1	CSTB3.5D	1	T-9D	AS0005-10	2	H2.5	LS1805RH	1	H3
57.00 - 59.99	OX32R	1	TPMX170408L	1	CSTB3.5D	1	T-9D	AS0005-10	2	H2.5	LS1805RH	1	H3
60.00 - 66.99	OX32R	1	TPMX170408L	1	CSTB3.5D	1	T-9D	AS0005-10	2	H2.5	LS1805RH	1	H3
67.00 - 80.99	OX43R	1	TPMX240512L	1	CSTB4M	1	T-15D	AS0005-15	2	H2.5	LS1806RH	1	H4
81.00 - 90.99	OX43R	1	TPMX240512L	1	CSTB4M	1	T-15D	AS0005-15	2	H2.5	LS1806RH	1	H4
91.00 - 99.99	OX43R	1	TPMX240512L	1	CSTB4M	1	T-15D	AS0005-15	2	H2.5	LS1806RH	1	H4
100.00 - 135.99	OX43R	1	TPMX240512L	1	CSTB4M	1	T-15D	AS0005-15	2	H2.5	LS1806RH	1	H4
136.00 - 293.99	OX43R	1	TPMX240512L	1	CSTB4M	1	T-15D	AS0005-15	2	H2.5	LS1806RH	1	H4

Guide pad SPARE PARTS

Tool diameter DCN-DCX (mm)	Guide pad ③	Qty	Lock screw	Qty	Wrench	Resin guide pad* ④	Qty	Lock screw	Qty	Wrench
40.00 - 45.99	GP08	3	CSTB3S	3	T-9D	RRG15	3	LS0904-10	6	H2.5
46.00 - 51.99	GP10	3	CSTB4S	3	T-15D	RRG15	3	LS0904-10	6	H2.5
52.00 - 56.99	GP10	3	CSTB4S	3	T-15D	RRG15	3	LS0904-10	6	H2.5
57.00 - 59.99	GP10	3	CSTB4S	3	T-15D	RRG20	3	LS0905-12	6	H3
60.00 - 66.99	GP14	3	CSTA5S	3	T-15D	RRG20	3	LS0905-12	6	H3
67.00 - 80.99	GP14	3	CSTA5S	3	T-15D	RRG20	3	LS0905-12	6	H3
81.00 - 90.99	GP14	3	CSTA5S	3	T-15D	RRG30	3	LS0906-15	6	H4
91.00 - 99.99	GP14	3	CSTA5S	3	T-15D	RRG35	3	LS0906-15	6	H4
100.00 - 122.99	GP18	3	LS1206S	3	H3	RRG35	3	LS0906-15	6	H4
123.00 - 135.99	GP18	3	LS1206S	3	H3	RRG40	3	LS0908-20	6	H5
136.00 - 185.99	GP18	5	LS1206S	5	H3	RRG40	3	LS0908-20	6	H5
186.00 - 209.99	GP18	5	LS1206S	5	H3	RRG50	3	LS1810-25	6	H8
210.00 - 245.99	GP18	5	LS1206S	5	H3	RRG60	3	LS1810-25	6	H8
246.00 - 293.99	GP18	5	LS1206S	5	H3	RRG70	3	LS1812-25	6	H10

* When ordering extra resin guide pads for your stock:
Please note that these are supplied oversize. To achieve the correct diameter they will have to be turned to size once mounted in the tool.

- Plus (+) spare parts will enlarge drill diameter up to 5 mm depending on cartridge size. (see page 067 for details)
- Drill heads come complete with: cartridge, guide pads, protectors, sub guide pad and wrenches - but less inserts.

COUNTERBORING HEAD DTS

COUNTERBORING HEAD DTS-EX

Counterboring head with external 4-start thread for double tube system (DTS), diameters adjustable, tool diameter ø25.00 - ø39.99 mm

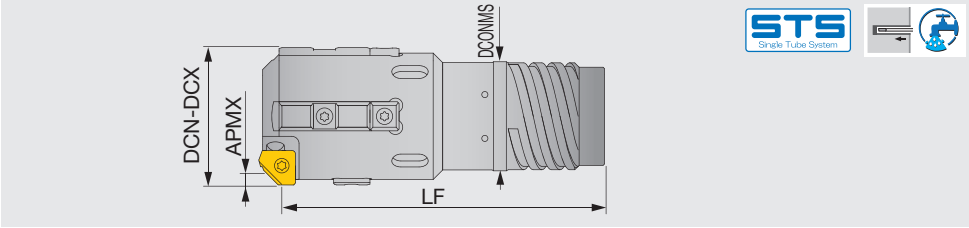

Non-standard products (to be supplied on request)

When ordering

KUDTR**E	-	xx.xx
Drill head		Diameter (mm)

e.g. Designation for tool diameter ø30.00 mm: **KUSTR26-30.00**

Designation	DCN	DCX	APMX	Outer tube		Drill head	
				Designation	Dia.(mm)	LF	DCONMS
KUDTR03E-xx.xx	25.00	26.40	2.8	OT03	23.5	72.5	21
KUDTR04E-xx.xx	26.41	28.70	2.8	OT04	26	72.5	23.5
KUDTR05E-xx.xx	28.71	31.00	2.8	OT05	28	75.5	25.5
KUDTR06E-xx.xx	31.01	33.30	2.8	OT06	30.5	75.5	28
KUDTR07E-xx.xx	33.31	36.20	2.8	OT07	33	75.5	30
KUDTR08E-xx.xx	36.21	39.60	2.8	OT08	35.5	90.5	33
KUDTR09E-xx.xx	39.61	39.99	2.8	OT09	39	90.5	36

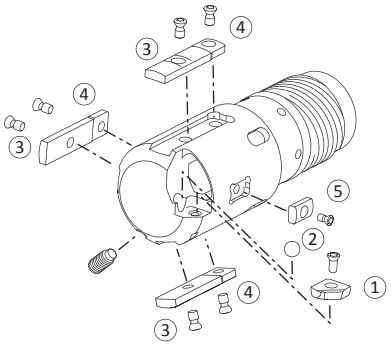

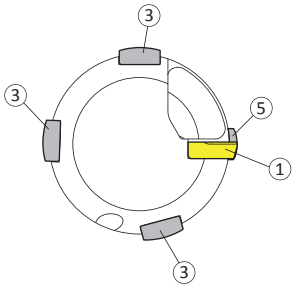

Note:
According to diameter, some parts may not reflect the picture above.

Cartridge, insert SPARE PARTS

Tool diameter DCN-DCX (mm)	Insert ①	Qty	Insert screw	Qty	Wrench	Adjust ball ②	Qty	Adjust screw	Qty	Wrench
25.00 - 29.99	IIS160-45	1	CSTANO3	1	T-9D	BALL5	1	AS0005-5	1	H2.5
30.00 - 37.99	IIS160-45	1	CSTANO3	1	T-9D	BALL5	1	AS0005-5	1	H2.5
38.00 - 39.99	IIS160-45	1	CSTANO3	1	T-9D	BALL5	1	AS0005-5	1	H2.5

Guide pad SPARE PARTS

Tool diameter DCN-DCX (mm)	Guide pad ③	Qty	Lock screw	Qty	Wrench	Protector ④	Qty	Lock screw	Qty	Wrench	Sub guide ⑤	Qty	Lock screw	Qty	Wrench
25.00 - 29.99	GP06	2	CSTB3S	2	T-9D	-		-		-	CUG06	1	CSTB2.2S	1	T-7D
30.00 - 37.99	GP07	3	CSTB3S	3	T-9D	-		-		-	CUG06	1	CSTB2.2S	1	T-7D
38.00 - 39.99	GP08	3	CSTB3S	3	T-9D	GPT08	3	CSTB3S	3	T-9D	CUG08	1	CSTB3S	1	T-9D

Drill heads come complete with: adjust ball, guide pads, protectors, sub guide pad and wrenches - but less inserts.

Reference pages: Inserts → 064, Guide pads → 066,
Standard cutting conditions → 065, Drill tube (STS) → 084

COUNTERBORING HEAD DTS

COUNTERBORING HEAD DTS-EX

Counterboring head with external 4-start thread for double tube system (DTS), diameters adjustable, tool diameter ø40.00 - ø183.99 mm

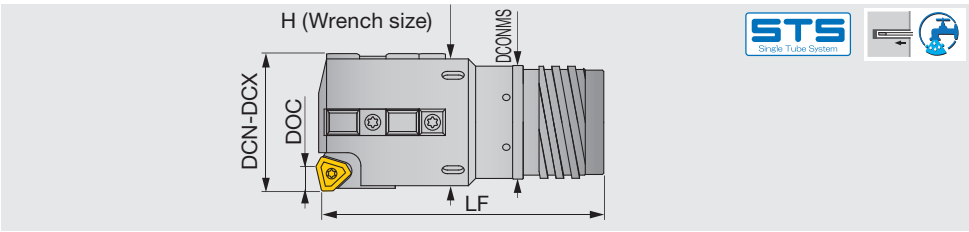

Non-standard products (to be supplied on request)

When ordering

KUDTR**E	-	xx.xx
Drill head		Diameter (mm)

e.g. Designation for tool diameter ø100.00 mm with OZ cartridge: **KUDTR19E-100.00**, OX cartridge: **KUDTR19E-100.00-OX**

Designation	DCN	DCX	APMX		Outer tube			Drill head	
			OZ	OX	Designation	Dia.(mm)	LF	DCONMS	H
KUDTR09E-xx.xx	40.00	43.00	6.4	4	OT09	39	90	36	40
KUDTR10E-xx.xx	43.01	47.00	6.4	4	OT10	42.5	95	39	43
KUDTR11E-xx.xx	47.01	51.70	6.4	4	OT11	46.5	100	43	48
KUDTR12E-xx.xx	51.71	51.99	6.4	4	OT12	51	100	47	53
KUDTR12E-xx.xx	52.00	56.20	7.2	4.8	OT12	51	100	47	53
KUDTR13E-xx.xx	56.21	65.00	7.2	4.8	OT13	55.5	110	51	61
KUDTR14E-xx.xx	65.00	66.99	7.2	4.8	OT14	56	150	52	63
KUDTR15E-xx.xx	67.00	72.99	10.4	6.4	OT15	62	150	58	69
KUDTR16E-xx.xx	73.00	79.99	10.4	6.4	OT16	68	150	63	76
KUDTR17E-xx.xx	80.00	86.99	10.4	6.4	OT17	75	180	70	83
KUDTR18E-xx.xx	87.00	99.99	10.4	6.4	OT18	82	180	77	96
KUDTR19E-xx.xx	100.00	111.99	10.4	6.4	OT19	94	180	89	107
KUDTR20E-xx.xx	112.00	123.99	10.4	6.4	OT20	106	205	101	119
KUDTR21E-xx.xx	124.00	135.99	10.4	6.4	OT21	118	205	113	131
KUDTR22E-xx.xx	136.00	147.99	10.4	6.4	OT22	130	205	125	143
KUDTR23E-xx.xx	148.00	159.99	10.4	6.4	OT23	142	225	137	155
KUDTR24E-xx.xx	160.00	171.99	10.4	6.4	OT24	154	225	149	167
KUDTR25E-xx.xx	172.00	183.99	10.4	6.4	OT25	166	225	161	179

Reference pages: Spare parts → 062, Inserts → 044, 063, Guide pads → 066, Standard cutting conditions → 065, Drill tube (DTS) → 086

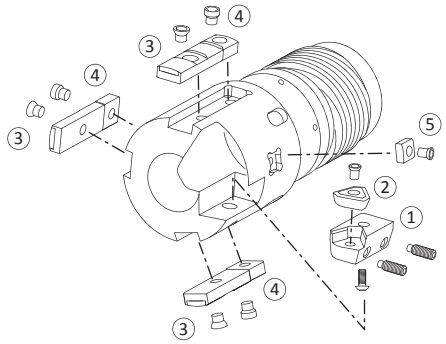

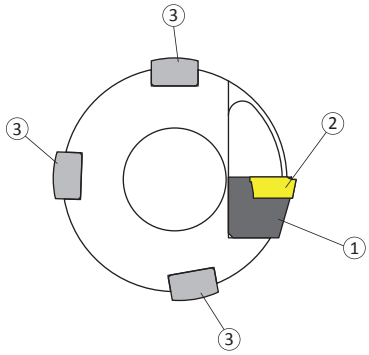

Note:
According to diameter, some parts may not reflect the picture above.

Cartridge, insert SPARE PARTS

OZ type (For large depth of cut)

Tool diameter DCN-DCX (mm)	Cartridge ①	Qty	Insert ②	Qty	Insert screw	Qty	Wrench	Adjust screw	Qty	Wrench	Lock screw	Qty	Wrench
40.00 - 45.99	OZ402-04	1	TPMX140308R	1	CSTB2.5	1	T-8D	AS0004-8	2	H2	LS1803.5RH	1	H2.5
46.00 - 51.99	OZ402-04	1	TPMX140308R	1	CSTB2.5	1	T-8D	AS0004-8	2	H2	LS1803.5RH	1	H2.5
52.00 - 59.99	OZ402-32	1	TPMX170408R	1	CSTB3.5D	1	T-9D	AS0005-10	2	H2.5	LS1805RH	1	H3
60.00 - 66.99	OZ402-32	1	TPMX170408R	1	CSTB3.5D	1	T-9D	AS0005-10	2	H2.5	LS1805RH	1	H3
67.00 - 99.99	OZ402-43	1	TPMX240512R	1	CSTB4M	1	T-15D	AS0005-15	2	H2.5	LS1806RH	1	H4
100.00 - 135.99	OZ402-43	1	TPMX240512R	1	CSTB4M	1	T-15D	AS0005-15	2	H2.5	LS1806RH	1	H4
136.00 - 183.99	OZ402-43	1	TPMX240512R	1	CSTB4M	1	T-15D	AS0005-15	2	H2.5	LS1806RH	1	H4

OX type (For small depth of cut)

Tool diameter DCN-DCX (mm)	Cartridge ①	Qty	Insert ②	Qty	Insert screw	Qty	Wrench	Adjust screw	Qty	Wrench	Lock screw	Qty	Wrench
40.00 - 45.99	OX04R	1	TPMX140308L	1	CSTB2.5	1	T-8D	AS0004-8	2	H2	LS1803.5RH	1	H2.5
46.00 - 51.99	OX04R	1	TPMX140308L	1	CSTB2.5	1	T-8D	AS0004-8	2	H2	LS1803.5RH	1	H2.5
52.00 - 59.99	OX32R	1	TPMX170408L	1	CSTB3.5D	1	T-9D	AS0005-10	2	H2.5	LS1805RH	1	H3
60.00 - 66.99	OX32R	1	TPMX170408L	1	CSTB3.5D	1	T-9D	AS0005-10	2	H2.5	LS1805RH	1	H3
67.00 - 99.99	OX43R	1	TPMX240512L	1	CSTB4M	1	T-15D	AS0005-15	2	H2.5	LS1806RH	1	H4
100.00 - 135.99	OX43R	1	TPMX240512L	1	CSTB4M	1	T-15D	AS0005-15	2	H2.5	LS1806RH	1	H4
136.00 - 183.99	OX43R	1	TPMX240512L	1	CSTB4M	1	T-15D	AS0005-15	2	H2.5	LS1806RH	1	H4

Guide pad SPARE PARTS

Tool diameter DCN-DCX (mm)	Guide pad ③	Qty	Lock screw	Qty	Wrench	Protector ④	Qty	Lock screw	Qty	Wrench	Sub guide ⑤	Qty	Lock screw	Qty	Wrench
40.00 - 45.99	GP08	3	CSTB3S	3	T-9D	GPT08	3	CSTB3S	3	T-9D	CUG08	1	CSTB3S	1	T-9D
46.00 - 51.99	GP10	3	CSTB4S	3	T-15D	GPT10	3	CSTB4S	3	T-15D	CUG08	1	CSTB3S	1	T-9D
52.00 - 59.99	GP10	3	CSTB4S	3	T-15D	GPT10	3	CSTB4S	3	T-15D	CUG08	1	CSTB3S	1	T-9D
60.00 - 66.99	GP14	3	CSTA5S	3	T-15D	GPT14	3	CSTA5S	3	T-15D	CUG10	1	CSTB3S	1	T-9D
67.00 - 99.99	GP14	3	CSTA5S	3	T-15D	GPT14	3	CSTA5S	3	T-15D	CUG10	1	CSTB3S	1	T-9D
100.00 - 135.99	GP18	3	LS1206S	3	H3	GPT18-M	3	LS1206S	3	H3	CUG14-M	1	CSTA5S	1	T-15D
136.00 - 183.99	GP18	5	LS1206S	5	H3	GPT18-M	5	LS1206S	5	H3	CUG14-M	1	CSTA5S	1	T-15D

- Plus (+) spare parts will enlarge drill diameter up to 5 mm depending on cartridge size. (see page 067 for details)
- Drill heads come complete with: cartridge, guide pads, protectors, sub guide pad and wrenches - but less inserts.

TPMX L-G(for general purpose)

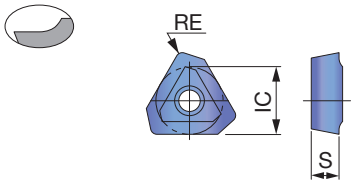

		AH9130	UC2220
P	Steel	★	
M	Stainless	★	
K	Cast iron	★	
N	Non-ferrous	★	
S	Superalloys	☆	
H	Hard materials	☆	

★ : First choice
☆ : Second choice

Designation	IC	S	Coated AH9130	Coated UC2220	RE
TPMX140308L-G	8.45	3.5		●	0.8
TPMX170408L-G	10.3	4	●	●	0.8
TPMX240512L-G	14.2	5.5	●	●	1.2
TPMX280716L-G	17	7.5	●	●	1.6

Use right-hand toolholders (R) with left-hand inserts (L).

●: New
●: Line up

TPMX L-BG(Provides good chip control in long-chipping steels)

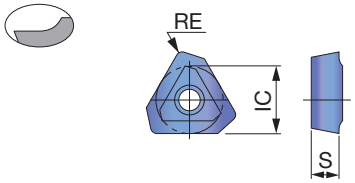

		UC2220
P	Steel	
M	Stainless	
K	Cast iron	
N	Non-ferrous	
S	Superalloys	
H	Hard materials	

★ : First choice
☆ : Second choice

Designation	IC	S	Coated UC2220	RE
TPMX170408L-BG	10.3	4	●	0.8
TPMX240512L-BG	14.2	5.5	●	1.2
TPMX280716L-BG	17	7.5	●	1.6

Use right-hand toolholders (R) with left-hand inserts (L).

●: New
●: Line up

TPMX L-DT(Reduced cutting force)

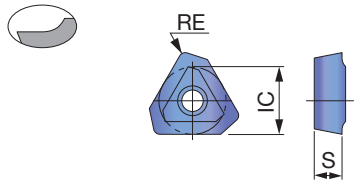

P	Steel	
M	Stainless	
K	Cast iron	
N	Non-ferrous	
S	Superalloys	
H	Hard materials	

★ : First choice
☆ : Second choice

Designation	IC	S	Coated	RE
			UC2220	
TPMX170408L-DT	10.3	4	●	0.8
TPMX240512L-DT	14.2	5.5	●	1.2

Use right-hand toolholders (R) with left-hand inserts (L).

●: New
●: Line up

IIS

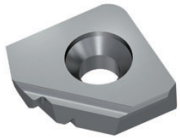

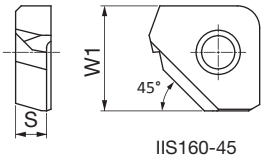

IIS160-45

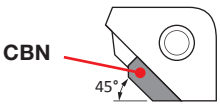

IIS160-45CBN

P	Steel	★	
M	Stainless	★	
K	Cast iron	★	☆
N	Non-ferrous	★	
S	Superalloys	★	☆
H	Hard materials	★	☆
	Sintered metal		★

★ : First choice
☆ : Second choice

Designation	Coated	CBN	S	W1
	1122	BX480		
IIS160-45	○		2.8	9.5
IIS160-45CBN		○	2.8	9.5

○ : To be supplied on request

STANDARD CUTTING CONDITIONS

ISO	Workpiece materials	*Vc* (m/min)	Feed: *f* (mm/rev) cutting width: ap (mm)		
			1.0 - 3.0	3.0 - 8.0	8.0<
P	Carbon steel Ex: S25C, S50C	60 - 140	0.1 - 0.3	0.15 - 0.3	0.1 - 0.3
	Alloy steel Ex: SCr420, SCM440	60 - 130	0.1 - 0.3	0.15 - 0.3	0.1 - 0.3
	Tool steel Ex: SKD11, SKH10	50 - 100	0.1 - 0.3	0.15 - 0.3	0.1 - 0.3
M	Stainless steel Ex: SUS304, SUS410	60 - 100	0.1 - 0.3	0.15 - 0.3	0.1 - 0.3
K	Grey cast iron Ex: FC250, FC350	60 - 120	0.1 - 0.3	0.15 - 0.3	0.1 - 0.3
	Nodular cast iron Ex: FCD400, FCD500	50 - 120	0.1 - 0.3	0.15 - 0.3	0.1 - 0.3
	Malleable cast iron Ex: FCMB	60 - 120	0.1 - 0.3	0.15 - 0.3	0.1 - 0.3
N	Aluminium alloy	60 - 200	0.1 - 0.4	0.1 - 0.4	0.1 - 0.4
	Copper alloy	60 - 200	0.1 - 0.4	0.1 - 0.4	0.1 - 0.4
S	Heat resistant, superalloy	40 - 80	0.1 - 0.3	0.15 - 0.3	0.1 - 0.3
	Titanium alloy	60 - 100	0.1 - 0.3	0.15 - 0.3	0.1 - 0.3

The above values should not be used as the exact recommendations. They may need modification depending on the machining conditions, materials, etc.

Replacement parts

Cartridges and inserts

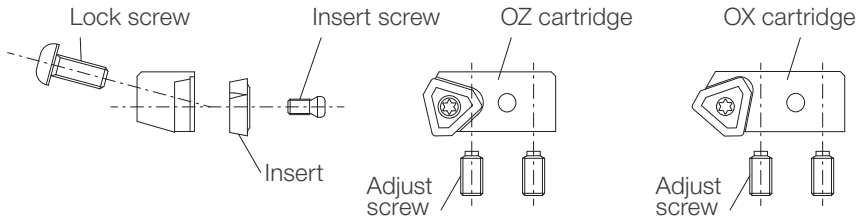

Cartridges are supplied with adjust screws and insert screw but without inserts, lock screws and wrenchs

Peripheral inserts and accessories

Cartridge	Insert	Insert screw	Wrench	Adjusting screw	Wrench	Lock screw	Wrench
OZ402-04	TPMX140308R	CSTB2.5	T-8D	AS0004-8	H2	LS1803.5RH	H2.5
OZ402-32	TPMX170408R	CSTB3.5D	T-9D	AS0005-10	H2.5	LS1805RH	H3
OZ402-43	TPMX240512R	CSTB4M	T-15D	AS0005-15	H2.5	LS1806RH	H4

Central and intermediate inserts and accessories

Cartridge	Insert	Insert screw	Wrench	Adjusting screw	Wrench	Lock screw	Wrench
OX04R	TPMX140308L	CSTB2.5	T-8D	AS0004-8	H2	LS1803.5RH	H2.5
OX32R	TPMX170408L	CSTB3.5D	T-9D	AS0005-10	H2.5	LS1805RH	H3
OX43R	TPMX240512L	CSTB4M	T-15D	AS0005-15	H2.5	LS1806RH	H4
OX63R	TPMX280716L	CSTB-5	T-20D	AS0006-15	H3	LS1806RH	H4

Guide pads and protectors

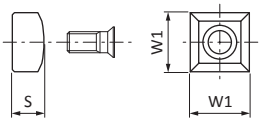

Guide pad	Lock screw	Wrench	Protector	Dimensions (mm) W1	Dimensions (mm) S	Lock screw	Wrench
GP06	CSTB3S	T-9D	-				
GP06-20-120-DC	CSTB3S	T-9D	-				
GP07	CSTB3S	T-9D	-				
GP07-20-120-DC	CSTB3S	T-9D	-				
GP08	CSTB3S	T-9D	GPT08	8	4.5	CSTB3S	T-9D
GP08-25-155-DC	CSTB3S	T-9D	GPT08	8	4.5	CSTB3S	T-9D
GP10	CSTB4S	T-15D	GPT10	10	6	CSTB4S	T-15D
GP10-35-200-DC	CSTB4S	T-15D	GPT10	10	6	CSTB4S	T-15D
GP14	CSTA5S	T-15D	GPT14	14	7.5	CSTA5S	T-15D
GP14-40-250-DC	CSTA5S	T-15D	GPT14	14	7.5	CSTA5S	T-15D
GP18	LS1206S	H3	GPT18-M	18	9	LS1206S	H3
GP18-40-300-DC	LS1206S	H3	GPT18-M	18	9	LS1206S	H3

Other carbide grades, coating and ceramic are available upon request.

Sub guide pad

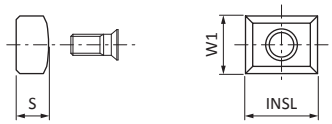

Guide pad	Dimensions (mm) W1	Dimensions (mm) S	Dimensions (mm) INSL	Lock screw	Wrench
CUG06	6	3	10	CSTB2.2S	T-7D
CUG08	8	4.5	10	CSTB3S	T-9D
CUG10	10	5	10	CSTB3S	T-9D
CUG14-M	14	7	20	CSTA5S	T-15D

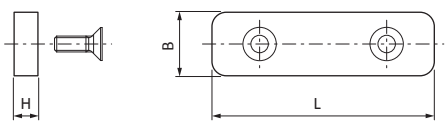

Resin guide	Dimensions (mm) B	Dimensions (mm) H	Dimensions (mm) L	Lock screw	Wrench
RRG10	10	4	40	LS0902.5-6	Plus(+) No1
RRG12	12	5	45	LS0903-8	H2
RRG15	15	5.8	50	LS0904-10	H2.5
RRG20	20	7.5	70	LS0905-12	H3
RRG30	30	12.5	80	LS0906-15	H4
RRG35	35	15.5	100	LS0906-15	H4
RRG40	40	18.5	120	LS0908-20	H5
RRG50	50	22.5	140	LS1810-25	H8
RRG60	60	23.5	150	LS1810-25	H8
RRG70	70	26.5	150	LS1812-25	H10

*H indicates dimension of resin guide before turning operation. When ordering extra resin guide pads for your stock, please note that these are supplied oversize. To achieve the correct diameter they will have to be turned to size once mounted in the tool.

Replacement parts

⊕Plus Plus parts

The use of the Plus parts allows the drill diameter to increase by up to 5 mm, in 1 mm increments.
The diameter is increased by replacing the peripheral cartridges.
Ex. The drill head diameter with OZ402-32 peripheral cartridge can be increased by up to 4 mm,
while the drill head diameter with OZ402-43 can be increased by up to 5 mm.

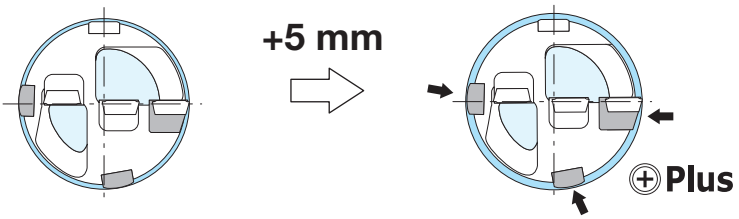

Peripheral cartridge: OZ402-43
Guide pads: GP14

Peripheral cartridge: OZ402-43+5
Guide pads: GP14-40-275-DC+5 FH3125

Note:
When the peripheral cartridge is changed, the guide pads must also be changed to the matching Plus parts.

Plus cartridge - OZ type

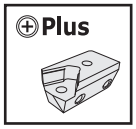

	+1 mm	+2 mm	+3 mm	+4 mm	+5 mm
OZ05R	OZ05R+1 ●	OZ05R+2 ●	-	-	-
OZ402-04	OZ402-04+1 ●	OZ402-04+2 ●	OZ402-04+3 ●	-	-
OZ402-32	OZ402-32+1 ●	OZ402-32+2 ●	OZ402-32+3 ●	OZ402-32+4 ●	-
OZ402-43	OZ402-43+1 ●	OZ402-43+2 ●	OZ402-43+3 ●	OZ402-43+4 ●	OZ402-43+5 ●
OZ402-63	OZ402-63+1 ●	OZ402-63+2 ●	OZ402-63+3 ●	OZ402-63+4 ●	OZ402-63+5 ●

Ordering example: OZ402-04+2, 10 pcs

Plus cartridge - OX type

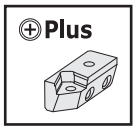

	+1 mm	+2 mm	+3 mm	+4 mm	+5 mm
OX04R	OX04R+1 ○	OX04R+2 ○	OX04R+3 ○	-	-
OX32R	OX32R+1 ○	OX32R+2 ○	OX32R+3 ○	OX32R+4 ○	-
OX43R	OX43R+1 ○	OX43R+2 ○	OX43R+3 ○	OX43R+4 ○	OX43R+5 ○
OX63R	OX63R+1 ○	OX63R+2 ○	OX63R+3 ○	OX63R+4 ○	OX63R+5 ○

Ordering example: OX32R+2, 10 pcs
Use OX cartridges when using the UNIDEX series for boring operations. OX has a smaller entry angel than OZ, allowing better hole quality.
OX and OZ can be mounted in the same pocket for the peripheral cartridge.

Plus guide pad

	+1 mm	Grade FH3125	+2 mm	Grade FH3125	+3 mm	Grade FH3125	+4 mm	Grade FH3125	+5 mm	Grade FH3125
GP08	GP08-25-160-DC+1	●	GP08-25-165-DC+2	●	GP08-25-170-DC+3	●	-		-	
GP10	GP10-35-205-DC+1	●	GP10-35-210-DC+2	●	GP10-35-215-DC+3	●	GP10-35-220-DC+4	●	-	
GP14	GP14-40-255-DC+1	●	GP14-40-260-DC+2	●	GP14-40-265-DC+3	●	GP14-40-270-DC+4	●	GP14-40-275-DC+5	●
GP18	GP18-40-305-DC+1	●	GP18-40-310-DC+2	●	GP18-40-315-DC+3	●	GP18-40-320-DC+4	●	GP18-40-325-DC+5	●

Ordering example: GP08-25-165-DC+2 FH3125, 10 pcs

● : New
● : Line up
○ : To be supplied on request

OZ and OX cartridge

Two types of cartridges are available for Indexable counterboring head.

OZ type for large depth of cut

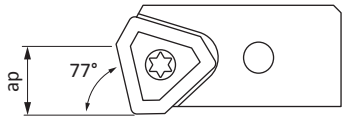

Cartridge	ap* (mm)	Insert
OZ402-04	6.4	TPMX140308R
OZ402-32	7.2	TPMX170408R
OZ402-43	10.4	TPMX240512R

*Minimum depth of cut is 2 mm for all size

OX type for small depth of cut

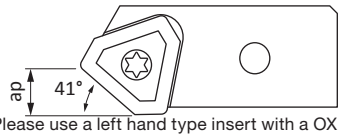

Please use a left hand type insert with a OX cartridge.

Cartridge	ap* (mm)	Insert
OX04R	4.0	TPMX140308L
OX32R	4.8	TPMX170408L
OX43R	6.4	TPMX240512L

*Minimum depth of cut is 2 mm for all size

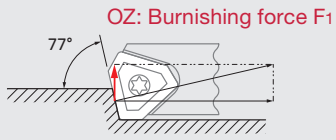

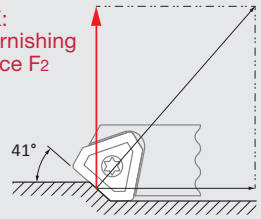

Due to smaller cutting angle, OX cartridge provides larger burnishing force which results better surface finish.

Burnishing force F2 > F1

Drill diameter calibration

The Drill head diameter is set and inspected with a master insert in our final inspection.
However, the inserts in the market have a tolerance fluctuation so each time you change or index the insert, the diameter must be adjusted as per the following method.

⚠ Poor hole precision, abnormal wear of inserts or guide pads, or serious tool damage may occur if the insert and guide pad diameters are not properly calibrated.

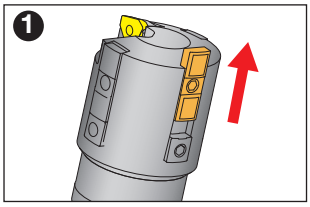

❶ The dimensional guide pad must be slid forward to measure the diameter.

❶-1 Loosen the lock screw and slide the guide pad forward.
❶-2 Retighten the lock screw at the measuring position.

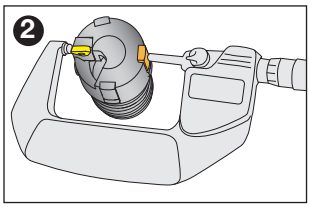

❷ Measure the diameter with a micrometer.
We recommend setting the Drill diameter at h8 tolerance to the cutting diameter.

If the diameter is incorrect, go to below step ❸
If it's correct, go to below step ❹

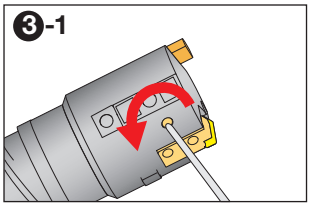

❸ Adjust the cartridge

❸-1 First loosen the lock screw of the cartridge and then tighten it slightly.

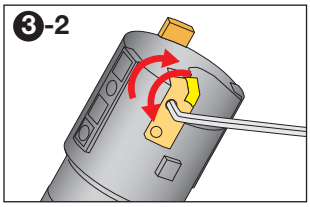

❸-2 Proceed to adjust the diameter, using the 2 adjust screws and measure with a micrometer.

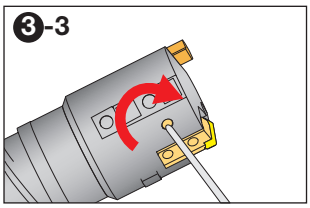

❸-3 When set to the size, retighten the lock screw.

❸-4 Recheck the diameter with a micrometer. If it is still out of tolerance, repeat the procedure from the step ❸-1

⚠ Please make sure to tighten the lock screw firmly before using. If loose, the cartridge may move and cause serious problems during machining.

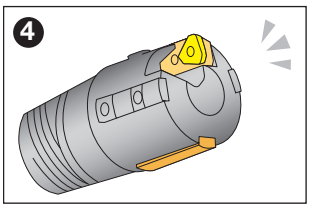

❹ Slide the dimensional guide pad back to the original position and tighten the lock screw.

⚠ Please check all the lock screws are firmly tightened as they may come loose if vibration occurs during drilling.

Drill diameter is adjusted with an adjust ball for diameter ø25.00 mm - ø39.99 mm with the following method.

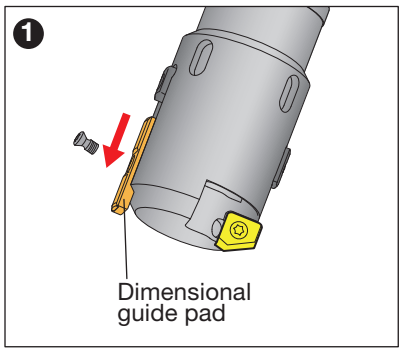

❶ Slide the dimensional guide pad forward and the retighten the lock screw at the measuring position.

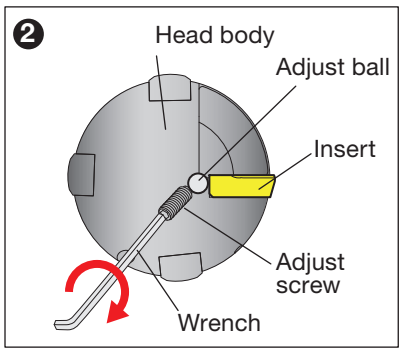

❷ Tighten the adjust screw.

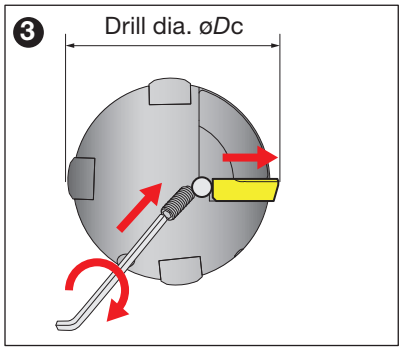

❸ As the adjust screw moves forward, insert moves peripheral direction.

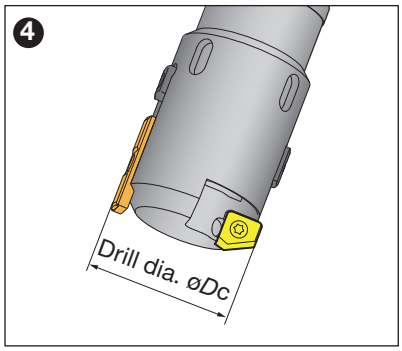

❹ Measure the diameter with a micrometer. If the diameter is larger than expected, loose the adjust screw and insert screw, then retighen the insert screw. Repeat the procedure from the step ❷.

Machine setting for single tube system

STS Single Tube System

Net power

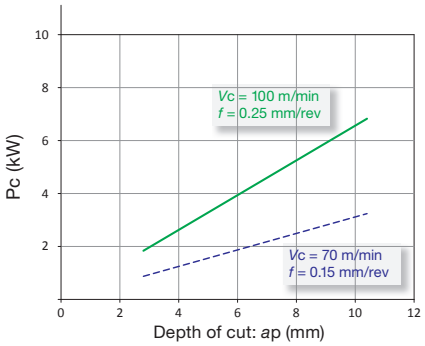

Feed force

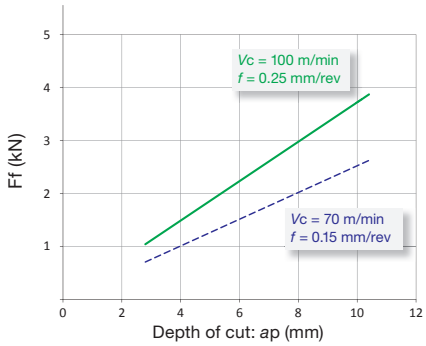

Torque

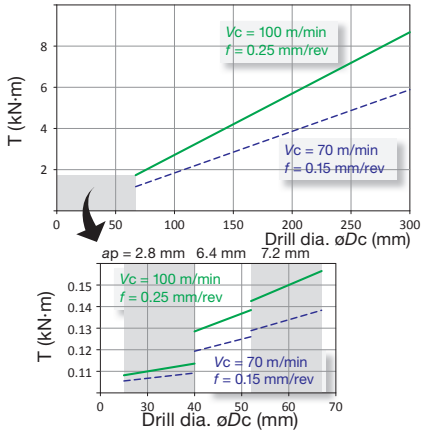

Coolant pressure

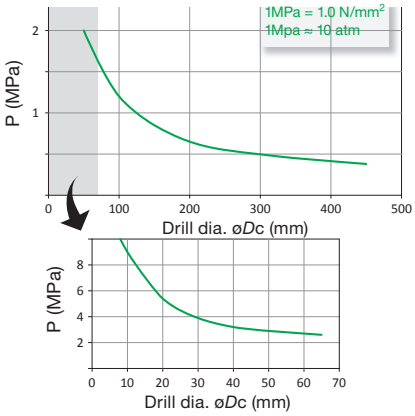

Coolant volume

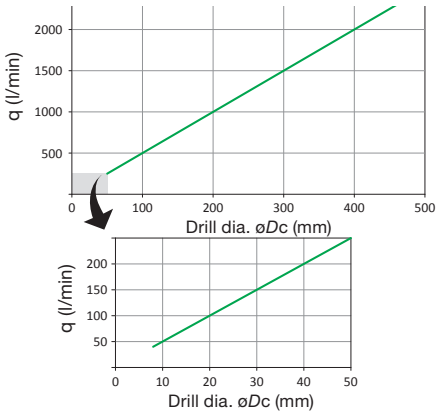

Machine setting for double tube system

DTS Double Tube System

Net power

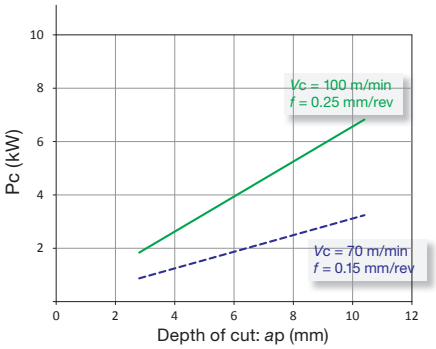

Feed force

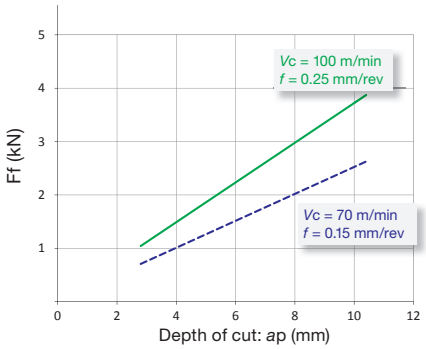

Torque

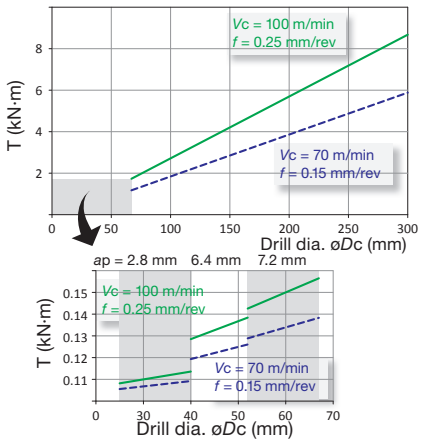

Coolant pressure

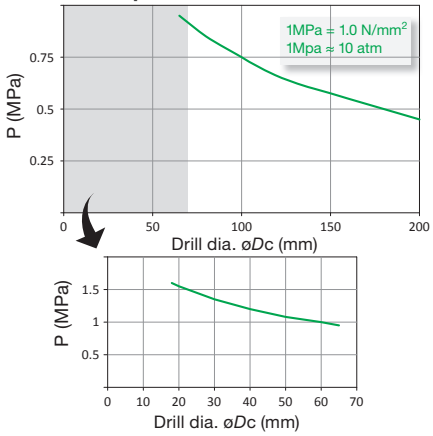

Coolant volume

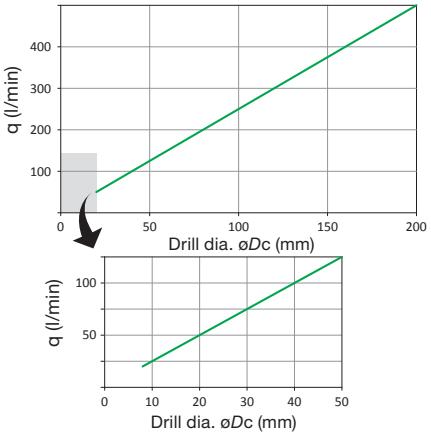

The above values should not be used as the exact recommendations. They may need modification depending on the machining conditions, materials, etc.

Trepanning

TREPANNING HEAD STS

TREPANNING HEAD STS-EX

Trepaning head with external 4-start thread for single tube system (STS), diameters adjustable, tool diameter ø100.00 - ø328.00 mm

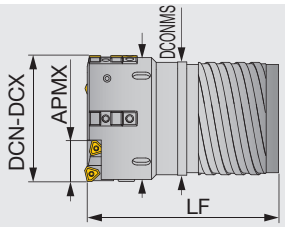

STS Single Tube System

Non-standard products (to be supplied on request)

When ordering

UTT**E	-	xx.xx
Drill head		Diameter (mm)

e.g. Designation for tool diameter ø200.00mm: **UTT27E-200.00**

Designation	DCN	DCX	APMX	Drill tube		LF	Drill head	H
				Designation	Dia.(mm)		DCONMS	
UTT19E-xx.xx	100.00	111.99	38	ST19	94	174	89	107
UTT20E-xx.xx	112.00	123.99	38	ST20	106	204	101	119
UTT21E-xx.xx	124.00	135.99	49.5	ST21	118	204	113	131
UTT22E-xx.xx	136.00	147.99	49.5	ST22	130	204	125	143
UTT23E-xx.xx	148.00	159.99	49.5	ST23	142	229	137	155
UTT24E-xx.xx	160.00	171.99	49.5	ST24	154	229	149	167
UTT25E-xx.xx	172.00	183.99	49.5	ST25	166	229	161	179
UTT26E-xx.xx	184.00	195.99	49.5	ST26	178	249	173	191
UTT27E-xx.xx	196.00	207.99	56.5	ST27	190	249	185	203
UTT28E-xx.xx	208.00	219.99	56.5	ST28	202	249	197	215
UTT29E-xx.xx	220.00	231.99	56.5	ST29	214	284	208	227
UTT30E-xx.xx	232.00	243.99	56.5	ST30	226	284	220	239
UTT31E-xx.xx	244.00	255.99	56.5	ST31	238	284	232	251
UTT32E-xx.xx	256.00	267.99	56.5	ST32	250	304	244	263
UTT33E-xx.xx	268.00	279.99	56.5	ST33	262	304	256	275
UTT34E-xx.xx	280.00	291.99	56.5	ST34	274	304	268	287
UTT35E-xx.xx	292.00	303.99	56.5	ST35	286	324	280	299
UTT36E-xx.xx	304.00	315.99	56.5	ST36	298	324	292	311
UTT37E-xx.xx	316.00	328.00	56.5	ST37	310	324	304	323

- Before drilling operation please adjust tool diameter.
For diameter adjustment please see page 078.

Reference pages: Spare parts → 073, Inserts → 044, 063, Guide pads → 077,
Standard cutting conditions → 076, Drill tube (STS) → 082

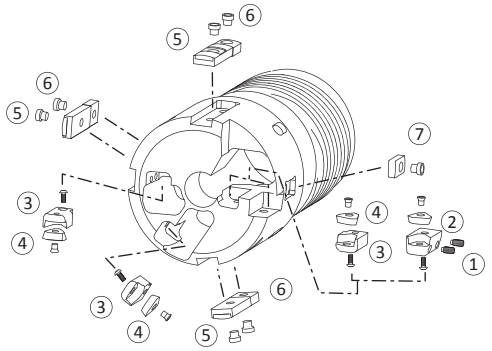

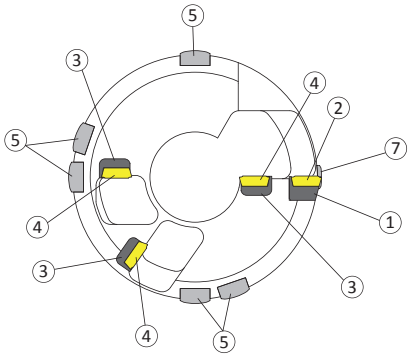

Note:
According to diameter, some parts may not reflect the picture above.

Cartridge, insert SPARE PARTS

Peripheral

Drill diameter DCN-DCX (mm)	Cartridge ①	Qty	Insert ②	Qty	Insert screw	Qty	Wrench	Adjust screw	Qty	Wrench	Lock screw	Qty	Wrench
100.00 - 123.99	OZ402-32	1	TPMX170408R	1	CSTB3.5D	1	T-9D	AS0005-10	2	H2.5	LS1805RH	1	H3
124.00 - 135.99	OZ402-43	1	TPMX240512R	1	CSTB4M	1	T-15D	AS0005-15	2	H2.5	LS1806RH	1	H4
136.00 - 195.99	OZ402-43	1	TPMX240512R	1	CSTB4M	1	T-15D	AS0005-15	2	H2.5	LS1806RH	1	H4
196.00 - 207.99	OZ402-63	1	TPMX280716R	1	CSTB5	1	T-20D	AS0006-15	2	H3	LS1806RH	1	H4
208.00 - 328.00	OZ402-63	1	TPMX280716R	1	CSTB5	1	T-20D	AS0006-15	2	H3	LS1806RH	1	H4

Inner

Drill diameter DCN-DCX (mm)	Cartridge ③	Qty	Insert ④	Qty	Insert screw	Qty	Wrench	Lock screw	Qty	Wrench
100.00 - 123.99	IOZ402-32L	3	TPMX170408L	3	CSTB3.5D	3	T-9D	CSTA5	3	T-15D
124.00 - 135.99	IOZ402-43L	3	TPMX240512L	3	CSTB4M	3	T-15D	LS1206	3	H3
136.00 - 195.99	IOZ402-43L	3	TPMX240512L	3	CSTB4M	3	T-15D	LS1206	3	H3L
196.00 - 207.99	IOZ402-43L	3	TPMX240512L	3	CSTB4M	3	T-15D	LS1206	3	H3L
208.00 - 328.00	IOZ402-43L	3	TPMX240512L	3	CSTB4M	3	T-15D	LS1206	3	H3L

Guide pad SPARE PARTS

Drill diameter DCN-DCX (mm)	Guide pad ⑤	Qty	Lock screw	Qty		Qty	Wrench	Protector ⑥	Qty	Lock screw	Qty	Wrench	Sub guide pad ⑦	Qty	Lock screw	Qty	Wrench
100.00 - 123.99	GP18	3	LS1206S	2	LS1206SSS*	1	H3	GPT18-M	3	LS1206S	3	H3	CUG14-M	1	CSTA5S	1	T-15D
124.00 - 135.99	GP18	3	LS1206S	3	-		H3	GPT18-M	3	LS1206S	3	H3	CUG14-M	1	CSTA5S	1	T-15D
136.00 - 195.99	GP18	5	LS1206S	5	-		H3	GPT18-M	5	LS1206S	5	H3	CUG14-M	1	CSTA5S	1	T-15D
196.00 - 207.99	GP18	5	LS1206S	5	-		H3	GPT18-M	5	LS1206S	5	H3	CUG14-M	1	CSTA5S	1	T-15D
208.00 - 328.00	GP22	3	LS1206S	3	-		H3	GPT22	3	LS1206S	3	H3	CUG14-M	1	CSTA5S	1	T-15D

*Lock screw for dimensional guide pad
Drill heads come complete with: cartridges, guide pads, protectors, sub guide pad and wrenches, but less inserts.

TREPANNING HEAD STS

TREPANNING HEAD STS-IN

Trepaning head with internal single-start thread for single tube system (STS), diameters adjustable, tool diameter ø100.00 - ø305.99 mm

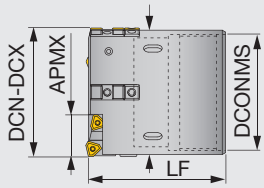

Non-standard products (to be supplied on request)

When ordering

UTT**	-	xx.xx
Drill head		Diameter (mm)

e.g. Designation for tool diameter ø200.00 mm: **UTT190-200.00**

Designation	DCN	DCX	APMX	Drill tube		LF	Drill head	H
				Designation	Dia.(mm)		DCONMS	
UTT94-xx.xx	100.00	110.99	38	UB94	94	139	90	106
UTT106-xx.xx	111.00	122.99	38	UB106	106	149	102	118
UTT118-xx.xx	123.00	123.99	38	UB118	118	149	114	119
UTT118-xx.xx	124.00	134.99	49.5	UB118	118	149	114	130
UTT130-xx.xx	135.00	148.99	49.5	UB130	130	149	126	144
UTT142-xx.xx	149.00	161.99	49.5	UB142	142	149	139	157
UTT154-xx.xx	162.00	173.99	49.5	UB154	154	169	151	169
UTT166-xx.xx	174.00	185.99	49.5	UB166	166	169	163	181
UTT178-xx.xx	186.00	195.99	49.5	UB178	178	169	175	191
UTT178-xx.xx	196.00	197.99	56.5	UB178	178	169	175	193
UTT190-xx.xx	198.00	209.99	56.5	UB190	190	169	187	205
UTT202-xx.xx	210.00	221.99	56.5	UB202	202	189	199	217
UTT214-xx.xx	222.00	233.99	56.5	UB214	214	189	211	229
UTT226-xx.xx	234.00	245.99	56.5	UB226	226	189	223	241
UTT238-xx.xx	246.00	257.99	56.5	UB238	238	189	235	253
UTT250-xx.xx	258.00	266.99	56.5	UB250	250	209	245	262
UTT262-xx.xx	267.00	281.99	56.5	UB262	262	209	259	277
UTT274-xx.xx	282.00	293.99	56.5	UB274	274	209	271	289
UTT286-xx.xx	294.00	305.99	56.5	UB286	286	209	283	301

- Before drilling operation please adjust tool diameter.
For diameter adjustment please see page 078.

Reference pages: Spare parts → 073, Inserts → 044, 063, Guide pads → 077, Standard cutting conditions → 076, Drill tube (STS) → 084

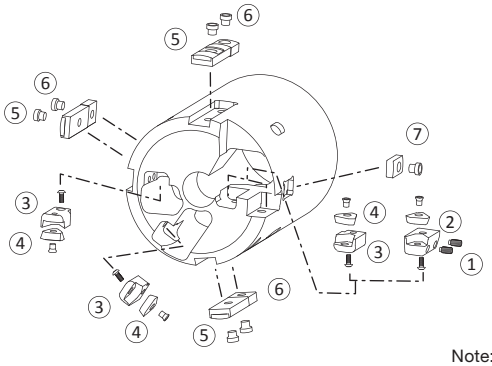

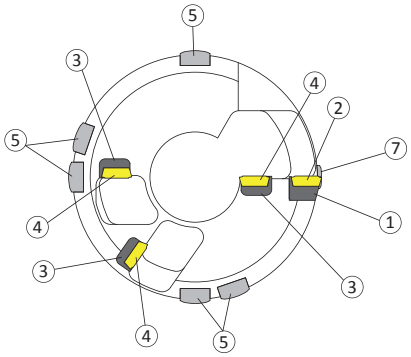

Note:
According to diameter, some parts may not reflect the picture above.

Cartridge, insert SPARE PARTS

Peripheral

Drill diameter DCN-DCX (mm)	Cartridge ①	Qty	Insert ②	Qty	Insert screw	Qty	Wrench	Adjust screw	Qty	Wrench	Lock screw	Qty	Wrench
100.00 - 123.99	OZ402-32	1	TPMX170408R	1	CSTB3.5D	1	T-9D	AS0005-10	2	H2.5	LS1805RH	1	H3
124.00 - 135.99	OZ402-43	1	TPMX240512R	1	CSTB4M	1	T-15D	AS0005-15	2	H2.5	LS1806RH	1	H4
136.00 - 195.99	OZ402-43	1	TPMX240512R	1	CSTB4M	1	T-15D	AS0005-15	2	H2.5	LS1806RH	1	H4
196.00 - 207.99	OZ402-63	1	TPMX280716R	1	CSTB5	1	T-20D	AS0006-15	2	H3	LS1806RH	1	H4
208.00 - 305.99	OZ402-63	1	TPMX280716R	1	CSTB5	1	T-20D	AS0006-15	2	H3	LS1806RH	1	H4

Inner

Drill diameter DCN-DCX (mm)	Cartridge ③	Qty	Insert ④	Qty	Insert screw	Qty	Wrench	Lock screw	Qty	Wrench
100.00 - 123.99	IOZ402-32L	3	TPMX170408L	3	CSTB3.5D	3	T-9D	CSTA5	3	T-15D
124.00 - 135.99	IOZ402-43L	3	TPMX240512L	3	CSTB4M	3	T-15D	LS1206	3	H3
136.00 - 195.99	IOZ402-43L	3	TPMX240512L	3	CSTB4M	3	T-15D	LS1206	3	H3L
196.00 - 207.99	IOZ402-43L	3	TPMX240512L	3	CSTB4M	3	T-15D	LS1206	3	H3L
208.00 - 305.99	IOZ402-43L	3	TPMX240512L	3	CSTB4M	3	T-15D	LS1206	3	H3L

Guide pad SPARE PARTS

Drill diameter DCN-DCX (mm)	Guide pad ⑤	Qty	Lock screw	Qty		Qty	Wrench	Protector ⑥	Qty	Lock screw	Qty	Wrench	Sub guide pad ⑦	Qty	Lock screw	Qty	Wrench
100.00 - 123.99	GP18	3	LS1206S	2	LS1206SSS*	1	H3	GPT18-M	3	LS1206S	3	H3	CUG14-M	1	CSTA5S	1	T-15D
124.00 - 135.99	GP18	3	LS1206S	3	-		H3	GPT18-M	3	LS1206S	3	H3	CUG14-M	1	CSTA5S	1	T-15D
136.00 - 195.99	GP18	5	LS1206S	5	-		H3	GPT18-M	5	LS1206S	5	H3	CUG14-M	1	CSTA5S	1	T-15D
196.00 - 207.99	GP18	5	LS1206S	5	-		H3	GPT18-M	5	LS1206S	5	H3	CUG14-M	1	CSTA5S	1	T-15D
208.00 - 305.99	GP22	3	LS1206S	3	-		H3	GPT22	3	LS1206S	3	H3	CUG14-M	1	CSTA5S	1	T-15D

*Lock screw for dimensional guide pad
Drill heads come complete with: cartridges, guide pads, protectors, sub guide pad and wrenches, but less inserts.

STANDARD CUTTING CONDITIONS

ISO	Workpiece material	Cutting speed *Vc* (m/min)	Feed *f* (mm/rev)
P	Low carbon steel Ex: S10C, S25C, SS400	80 - 100	0.12 - 0.30
	Carbon steel Ex: S45C, S55C	80 - 100	0.12 - 0.30
	Low alloy steel Ex: SNC, DCr, SNCM	60 - 100	0.12 - 0.30
	High alloy steel, Cast steel, Tool-steel Ex: SNS, SKD, SKT	60 - 100	0.12 - 0.30
M	Stainless steels(Ferritic) Ex: SUS430	50 - 90	0.12 - 0.30
	Stainless steels(Martensite) Ex: SUS410, SUS420J	50 - 90	0.12 - 0.30
	Stainless steels(Austenite) Ex: SUS304, SUS316L	50 - 90	0.12 - 0.30
K	Ductile cast iron Ex: FCD400 - FCD450	60 - 100	0.12 - 0.30
	Grey cast iron Ex: FC250, FC350	50 - 100	0.12 - 0.30
	Malleable cast iron Ex: FCMB, FCMW	80 - 100	0.12 - 0.30
N	Aluminium alloys (forged)	65 - 130	0.10 - 0.30
	Aluminium alloys (cast)	65 - 130	0.10 - 0.30
	Copper alloys	65 - 130	0.10 - 0.30
S	Heat-resistant materials, Superalloys	20 - 65	0.10 - 0.20
	Titanium alloys	30 - 100	0.10 - 0.20

The above values should not be used as the exact recommendations.
They may need modification depending on the machining conditions, materials, etc.

Replacement parts

Cartridges and inserts

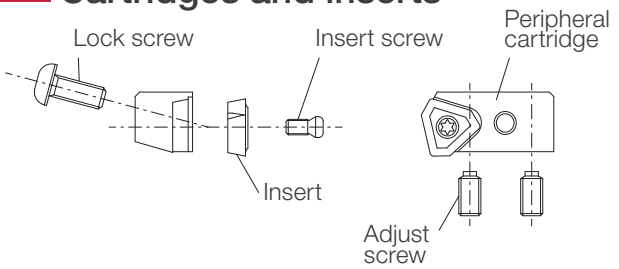

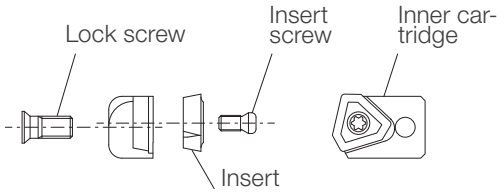

- Outer cartridges are supplied with adjust screws and insert screw but without inserts, lock screws and wrenchs
- Inner cartridges are supplied with insert screw but without inserts, lock screws and wrenchs

Peripheral inserts and accessories

Cartridge	Insert	Insert screw	Wrench	Adjust screw	Wrench	Lock screw	Wrench
OZ402-32	TPMX170408R	CSTB3.5D	T-9D	AS0005-10	H2.5	LS1805RH	H3
OZ402-43	TPMX240512R	CSTB4M	T-15D	AS0005-15	H2.5	LS1806RH	H4
OZ402-63	TPMX280716R	CSTB5	T-20D	AS0006-15	H3	LS1806RH	H4

Central and intermediate inserts and accessories

Cartridge	Insert	Insert screw	Wrench	Lock screw	Wrench
IOZ402-32L	TPMX170408L	CSTB3.5D	T-9D	CSTA5	T-15D
IOZ402-43L	TPMX240512L	CSTB4M	T-15D	LS1206	H3 / H3L*

*H3L is for over ø136.00 mm

Guide pads and protectors

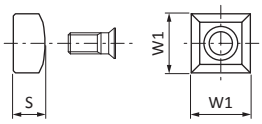

Guide pad	Lock screw	Wrench	Protector	Dimensions (mm) W1	Dimensions (mm) S	Lock screw	Wrench
GP18	LS1206S / LS1206SSS **	H3	GPT18-M	18	9	LS1206S	H3
GP18-40-300-DC	LS1206S / LS1206SSS **	H3	GPT18-M	18	9	LS1206S	H3
GP22	LS1206S	H3	GPT22	22	15	LS1206S	H3

**For dimensional guide pad ø100.00 - ø123.99 mm
Other carbide grades, coating and ceramic are available upon request.

Sub guide pad

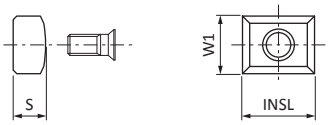

Guide pad	Dimensions (mm) W1	Dimensions (mm) S	Dimensions (mm) INSL	Lock screw	Wrench
CUG14-M	14	7	20	CSTA5S	T-15D

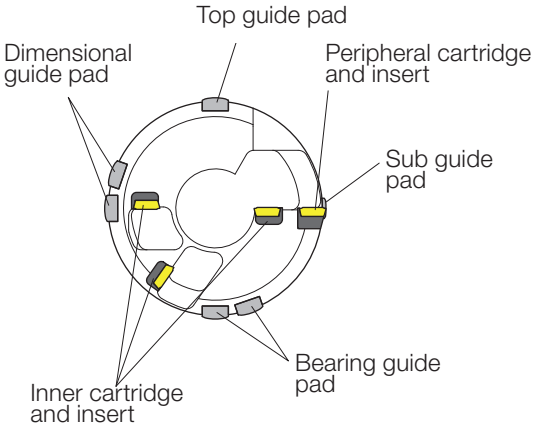

Drill diameter calibration

The Drill head diameter is set and inspected with a master insert in our final inspection.
However, the inserts in the market have a tolerance fluctuation so each time you change or index the insert, the diameter must be adjusted as per the following method.

⚠ When a corner change is made on the insert, it must be adjusted to correct size or a damage can be caused to the head body or a workpiece material.

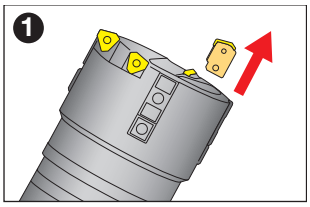

❶ Remove the inner cartridge next to the dimensional guide pad to avoid interference with the guide screw.

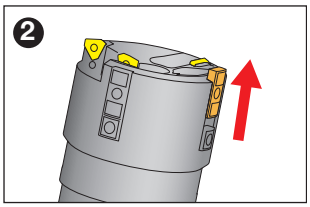

❷ The dimensional guide pad must be slid forward to measure the diameter.

❷-1 Loosen the lock screw and slide the guide pad forward.
❷-2 Retighten the lock screw at the measuring position.

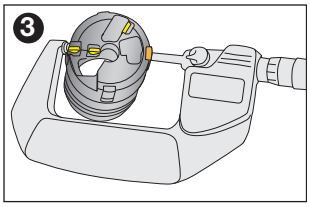

❸ Measure the diameter with a micrometer.
We recommend setting the Drill diameter at h8 tolerance to the cutting diameter.

If the diameter is incorrect, go to below step ❹
If it's correct, go to below step ❺

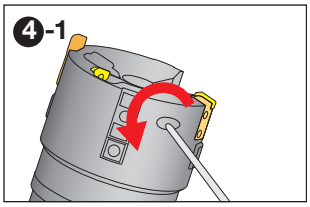

❹ Adjust the peripheral cartridge

❹-1 First loosen the lock screw of the peripheral cartridge and then tighten it slightly.

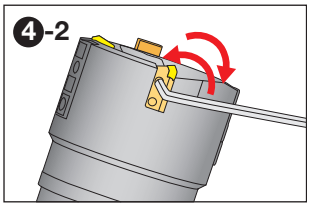

❹-2 Proceed to adjust the diameter, using the 2 adjust screws and measure with a micrometer.

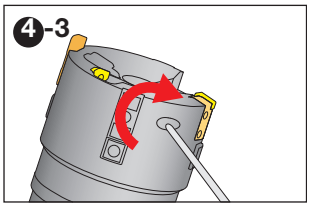

❹-3 When set to the size, retighten the lock screw.

❹-4 Recheck the diameter with a micrometer. If it is still out of tolerance, repeat the procedure from the step ❹-1

⚠ Please make sure to tighten the lock screw firmly before using. If loose, the cartridge may move and cause serious problems during machining.

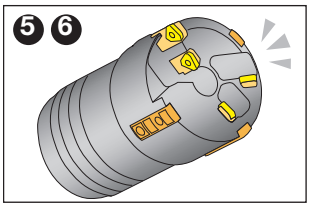

❺ Slide the dimensional guide pad back to the original position and tighten the lock screw.

❻ Replace the inner cartridge and tighten the lock screw.

⚠ Please check all the lock screws are firmly tightened as they may come loose if vibration occurs during drilling.

Machine setting for single tube system

Net power

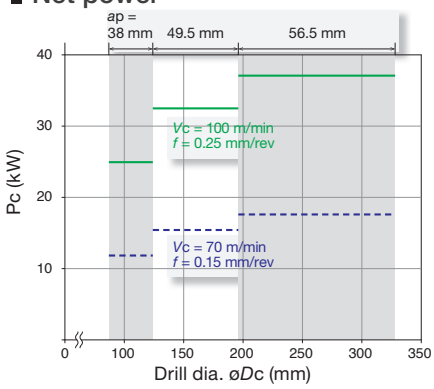

Feed force

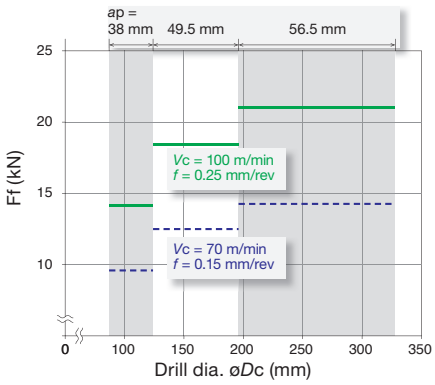

Torque

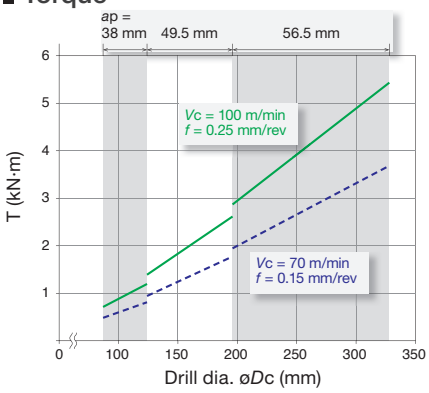

Coolant pressure

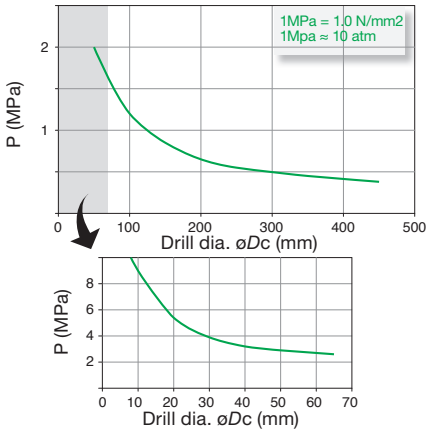

Coolant volume

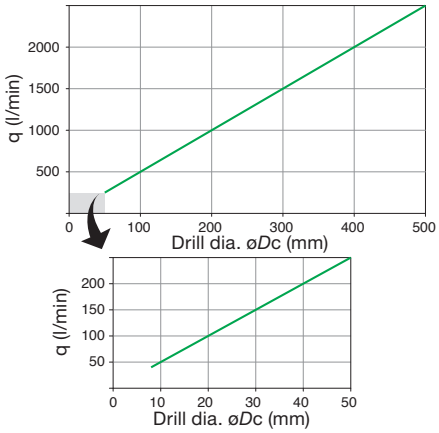

Special tooling

Various types of special tooling are available upon request.
Some examples are shown below.
Please contact your sales representative for further information.

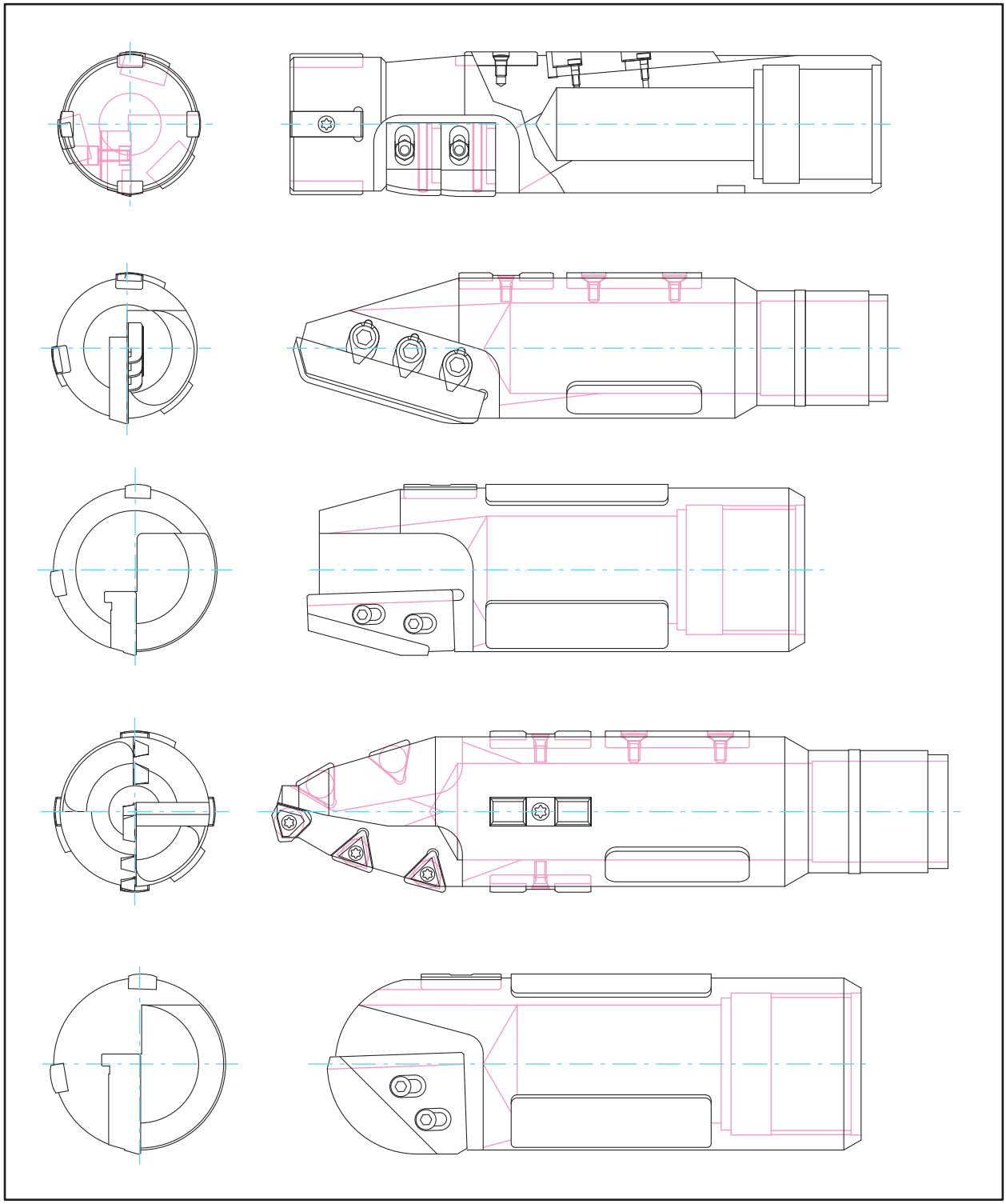

MEMO

TUBES

ST STS

ST - for single tube system

Drill tube for single tube system (STS), internal thread type, 2-start thread (tool dia. ≤ ø15.59 mm) or 4-start thread (tool dia. ≥ ø15.6 mm)

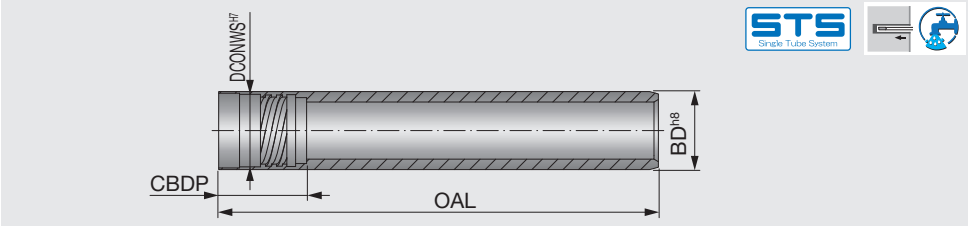

Designation	DCN-DCX	OAL 1600	OAL 2600	OAL Special length	BD	DCONWS	CBDP
ST0097	15.6 - 16.7	●		○	14	12.6	21
ST0098	16.71 - 17.7	●	●	○	15	13.6	21
ST0099	17.71 - 18.9	●	●	○	16	14.5	22
ST0000	18.91 - 20	●	●	○	17	15.5	22
ST00	20.01 - 21.8	●	●	○	18	16	27.5
ST01	21.81 - 24.1		●	○	20	18	30
ST02	24.11 - 26.4		●	○	22	19.5	30
ST03	26.41 - 28.7		●	○	24	21	30
ST04	28.71 - 31		●	○	26	23.5	33
ST05	31.01 - 33.3		●	○	28	25.5	33
ST06	33.31 - 36.2		●	○	30	28	33
ST07	36.21 - 39.6		●	○	33	30	40
ST08	39.61 - 43		●	○	36	33	40
ST09	43.01 - 47		●	○	39	36	40
ST10	47.01 - 51.7		●	○	43	39	40
ST11	51.71 - 56.2		●	○	47	43	44
ST12	56.21 - 60.6		●	○	51	47	44
ST13	60.61 - 65			○	56	51	44
ST14	65 - 66.99			○	56	52	75
ST15	67 - 72.99			○	62	58	75

Designation	DCN-DCX	OAL Special length	BD	DCONWS	CBDP
ST16	73 - 79.99	○	68	63	75
ST17	80 - 86.99	○	75	70	97
ST18	87 - 99.99	○	82	77	97
ST19	100 - 111.99	○	94	89	97
ST20	112 - 123.99	○	106	101	118
ST21	124 - 135.99	○	118	113	118
ST22	136 - 147.99	○	130	125	118
ST23	148 - 159.99	○	142	137	139
ST24	160 - 171.99	○	154	149	139
ST25	172 - 183.99	○	166	161	139
ST26	184 - 195.99	○	178	173	144
ST27	196 - 207.99	○	190	185	144
ST28	208 - 219.99	○	202	197	144
ST29	220 - 231.99	○	214	208	164
ST30	232 - 243.99	○	226	220	164
ST31	244 - 255.99	○	238	232	164
ST32	256 - 267.99	○	250	244	184
ST33	268 - 279.99	○	262	256	184
ST34	280 - 291.99	○	274	268	184

Please specify the length (OAL) when ordering.
e.g. For ø60 mm drill diameter / 2600 mm drill tube length: ST12X2600
The lengths that are not in the above will be available upon request.

● : Line up
○ : Item to be customized

Reference pages: Drill head → 010 (TRI-FINE STS-EX), 017 (FINE-BEAM STS-EX), 027 (UNIDEX STS-EX)

Tube length for special drills

Drill tubes with non-standard lengths will be available upon request.
Please use the guide below to calculate the drill tube length.

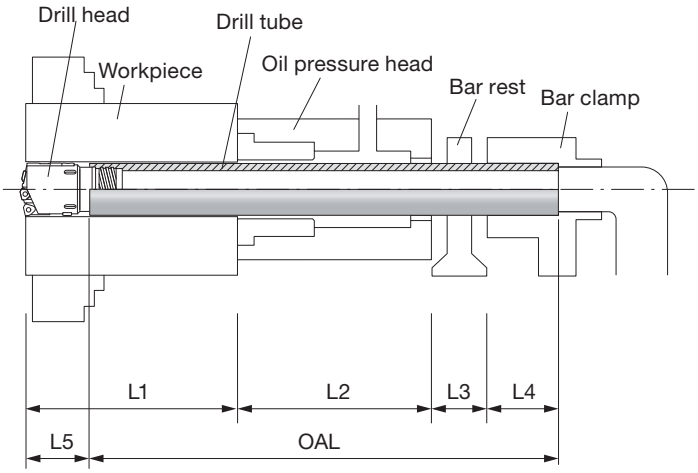

Drill tube length OAL ≒ L1 + L2 + L3 + L4 - L5

OAL = Drill tube overall length
L1 = Drilling depth
L2 = Oil pressure head length
L3 = Bar rest length
L4 = Drill tube clamp length
L5 = Length from drill tube tip and peripheral edge tip

TRI-FINE

DCN-DCX	L5
16 - 16.7	34
16.71 - 17.7	34
17.71 - 18.9	34
18.91 - 20	34
20.01 - 21.8	32.5
21.81 - 21.99	33.5
22 - 24.1	35.5
24.11 - 26.4	35.5
26.41 - 28	35.5

FINE-BEAM

DCN-DCX	L5
25 - 28.7	40
28.71 - 33.3	42
33.31 - 36.2	47
36.21 - 39.6	50
39.61 - 43	55
43.01 - 51.7	60
51.71 - 56.2	66
56.21 - 65	71

UNIDEX

DCN-DCX	L5
38 - 43	45
43.01 - 51.7	55
51.71 - 56.2	56
56.21 - 65	66
65 - 79.99	75
80 - 111.99	83
112 - 147.99	87
148 - 183.99	86
184 - 255.99	101
256 - 291.99	106

UB STS

UB - for single tube system

Drill tube for single tube system (STS), external thread type, single-start thread

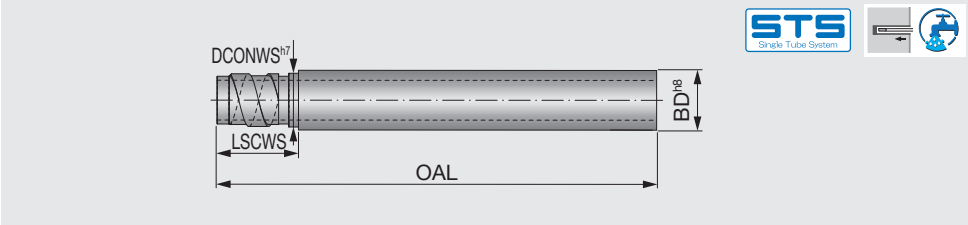

Designation	DCN-DCX	OAL Special length	BD	DCONWS	LSCWS
UB13-1	15.51 - 16	○	13	12.4	23
UB13-2	16.01 - 16.5	○	13	12.7	23
UB14-1	16.51 - 17.25	○	14	13.4	23
UB14-2	17.26 - 18	○	14	13.7	23
UB15	18.01 - 19	○	15	14.4	23
UB16.5	19.01 - 19.99	○	16.5	15.4	23
UB18	20 - 21.99	○	18	16.5	26
UB20	22 - 24.99	○	20	19	26
UB22	25 - 26.99	○	22	20	26
UB24	27 - 29.99	○	24	22	26
UB26	30 - 31.99	○	26	24	26
UB28	32 - 33.99	○	28	26	26
UB30	34 - 36.99	○	30	27	41
UB33	37 - 39.99	○	33	30	41
UB36	40 - 43.99	○	36	33	41
UB39	44 - 46.99	○	39	37	41
UB43	47 - 51.99	○	43	41	41
UB47	52 - 56.99	○	47	44	41
UB51	57 - 60.99	○	51	49	41
UB56	61 - 67.99	○	56	53	41

Designation	DCN-DCX	OAL Special length	BD	DCONWS	LSCWS
UB62	68 - 74.99	○	62	59	41
UB68	75 - 80.99	○	68	65	71
UB75	81 - 90.99	○	75	71	71
UB82	91 - 98.99	○	82	79	71
UB94	99 - 110.99	○	94	90	71
UB106	111 - 122.99	○	106	102	71
UB118	123 - 134.99	○	118	114	71
UB130	135 - 148.99	○	130	126	71
UB142	149 - 161.99	○	142	139	71
UB154	162 - 173.99	○	154	151	86
UB166	174 - 185.99	○	166	163	86
UB178	186 - 197.99	○	178	175	86
UB190	198 - 209.99	○	190	187	86
UB202	210 - 221.99	○	202	199	86
UB214	222 - 233.99	○	214	211	86
UB226	234 - 245.99	○	226	223	86
UB238	246 - 257.99	○	238	235	86
UB250	258 - 269.99	○	250	247	121
UB262	270 - 281.99	○	262	259	121
UB274	282 - 293.99	○	274	271	121

Please specify the length (OAL) when ordering.
e.g. For ø60 mm drill diameter / 2600 mm drill tube length: UB51X2600

○ : Item to be customized

Reference pages: Drill head → 011 (TRI-FINE STS-IN), 018 (FINE-BEAM STS-IN), 028 (UNIDEX STS-IN)

Tube length for special drills

Please use the guide below to calculate the drill tube length.

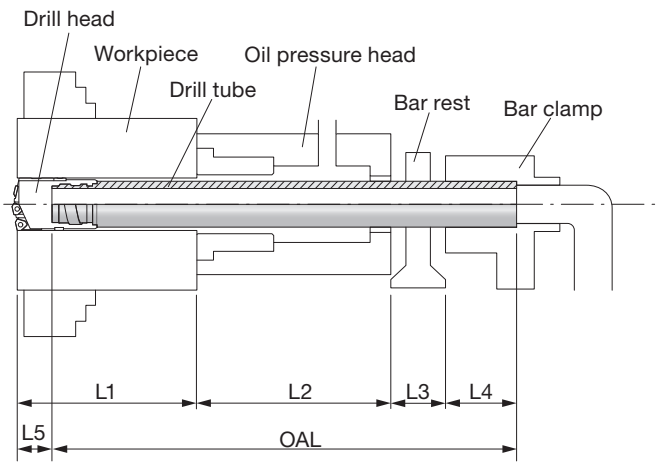

OAL	=	Drill tube overall length
L1	=	Drilling depth
L2	=	Oil pressure head length
L3	=	Bar rest length
L4	=	Drill tube clamp length
L5	=	Length from drill tube tip and peripheral edge tip

Drill tube length OAL ≒ L1 + L2 + L3 + L4 - L5

TRI-FINE

DCN-DCX	L5
16 - 16.5	31.5
16.51 - 17.25	31.5
17.26 - 18	31.5
18.01 - 19	31.5
19.01 - 19.99	31.5
20 - 21.99	33
22 - 24.99	35
25	35
25.01 - 26.99	40
27 - 28	40

FINE-BEAM

DCN-DCX	L5
25 - 29.99	45
30 - 33.99	50
34 - 36.99	50
37 - 39.99	55
40 - 43.99	60
44 - 51.99	65
52 - 56.99	70
57 - 65	75

UNIDEX

DCN-DCX	L5
38 - 43.99	40
44 - 51.99	50
52 - 56.99	60
57 - 67.99	70
68 - 161.99	80
162 - 257.99	105
258 - 293.99	90

OT & IT DTS

OT & IT - for double tube system

Outer tube and inner tube for double tube system (DTS)

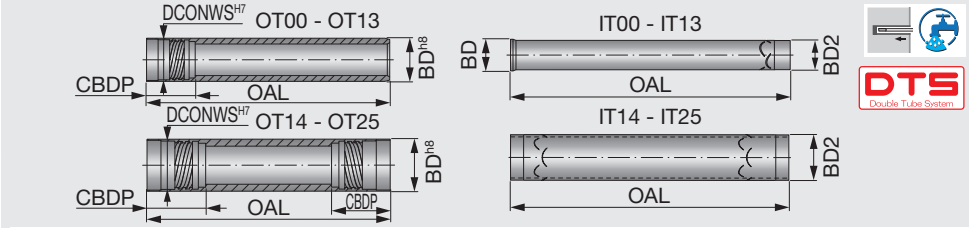

Outer tube (OT)

Designation	DCN-DCX	OAL Special length	BD	DCONWS	CBDP
OT00	18.4 - 20	○	18	16	27.5
OT01	20.01 - 21.8	○	19.5	18	30
OT02	21.81 - 24.1	○	21.5	19.5	30
OT03	24.11 - 26.4	○	23.5	21	30
OT04	26.41 - 28.7	○	26	23.5	33
OT05	28.71 - 31	○	28	25.5	33
OT06	31.01 - 33.3	○	30.5	28	33
OT07	33.31 - 36.2	○	33	30	40
OT08	36.21 - 39.6	○	35.5	33	40
OT09	39.61 - 43	○	39	36	40
OT10	43.01 - 47	○	42.5	39	40
OT11	47.01 - 51.7	○	46.5	43	44
OT12	51.71 - 56.2	○	51	47	44
OT13	56.21 - 65	○	55.5	51	44
OT14	65 - 66.99	○	56	52	75
OT15	67 - 72.99	○	62	58	75
OT16	73 - 79.99	○	68	63	75
OT17	80 - 86.99	○	75	70	97
OT18	87 - 99.99	○	82	77	97
OT19	100 - 111.99	○	94	89	97
OT20	112 - 123.99	○	106	101	118
OT21	124 - 135.99	○	118	113	118
OT22	136 - 147.99	○	130	125	118
OT23	148 - 159.99	○	142	137	139
OT24	160 - 171.99	○	154	149	139
OT25	172 - 183.99	○	166	161	139

Inner tube (IT)

Designation	DCN-DCX	OAL Special length	BD	BD2
IT00	18.4 - 20	○	12	10
IT01	20.01 - 21.8	○	14	12
IT02	21.81 - 24.1	○	15	13
IT03	24.11 - 26.4	○	16	14
IT04	26.41 - 28.7	○	18	16
IT05	28.71 - 31	○	20	18
IT06	31.01 - 33.3	○	22	20
IT07	33.31 - 36.2	○	24	22
IT08	36.21 - 39.6	○	26	24
IT09	39.61 - 43	○	29	27
IT10	43.01 - 47	○	32	30
IT11	47.01 - 51.7	○	35	32
IT12	51.71 - 56.2	○	39	36
IT13	56.21 - 65	○	43	40
IT14	65 - 66.99	○	-	40
IT15	67 - 72.99	○	-	44
IT16	73 - 79.99	○	-	48
IT17	80 - 86.99	○	-	54
IT18	87 - 99.99	○	-	60
IT19	100 - 111.99	○	-	70
IT20	112 - 123.99	○	-	80
IT21	124 - 135.99	○	-	80
IT22	136 - 147.99	○	-	95
IT23	148 - 159.99	○	-	100
IT24	160 - 171.99	○	-	120
IT25	172 - 183.99	○	-	130

○ : Item to be customized

Please specify the length (OAL) when ordering.
e.g. For ø60 mm drill diameter / 1070 mm drill outer tube length: OT13X1070
Please choose the inner tube length according to the guide below:

- tool diameter: ø18.40 - ø65.00 mm (OT00 - OT13) ..... Inner tube length = Outer tube length + 30 mm
- tool diameter: ø65.00 - ø123.99 mm (OT14 - OT20) ..... Inner tube length = Outer tube length + 190 mm
- tool diameter: ø124.00 - ø183.99 mm (OT21 - OT25) ..... Inner tube length = Outer tube length + 220 mm

Reference pages: Drill head → 012 (TRI-FINE DTS), 019 (FINE-BEAM DTS), 039 (UNIDEX DTS)

Tube length for special drills

Please use the guide below to calculate the drill tube length.

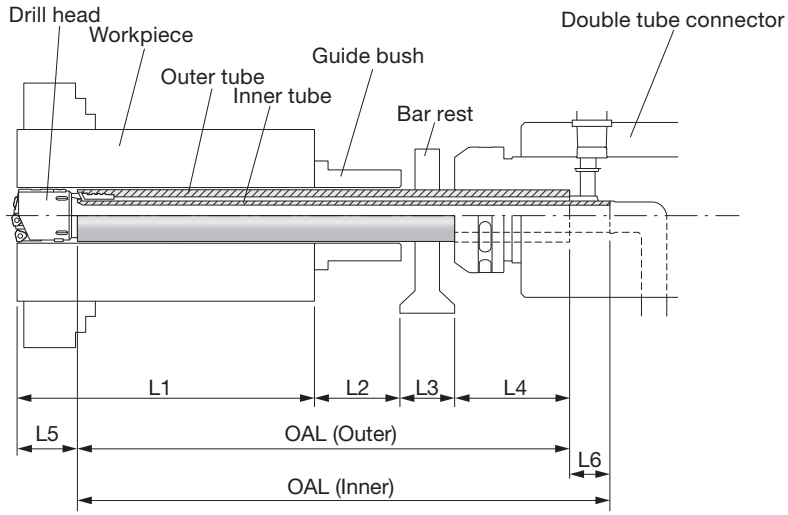

L1 = Drilling depth
L2 = Guide bush length (or pilot hole depth)
L3 = Bar rest length
L4 = Length of outer tube in connector*
L5 = Length from drill tube tip and peripheral edge tip
L6 = Difference between outer tube length and inner tube length**

Outer tube overall length ≒ L1 + L2 + L3 + L4 - L5

Inner tube overall length = Outer tube overall length + L6

DTC	L4*	L6**
DTC 4R (OT00 - OT13)	120	30
DTC 5R (OT14 - OT20)	0	190
DTC 6R (OT21 - OT25)	0	220

(mm)

For smooth drill entry, make sure that the drill head is inside the guide bushing (or pilot hole) all the way up to 5 mm over the outer tube.

TRI-FINE

DCN-DCX	L5
18.4 - 20	31.5
20.01 - 21.8	33.5
21.81 - 21.99	33.5
22 - 24.1	35.5
24.11 - 25	35.5
25.01 - 26.4	37.5
26.41 - 28	37.5

FINE-BEAM

DCN-DCX	L5
25 - 26.4	40
26.41 - 31	42
31.01 - 33.3	47
33.31 - 36.2	50
36.21 - 39.6	55
39.61 - 47	60
47.01 - 51.7	66
51.71 - 65	71

UNIDEX

DCN-DCX	L5
38 - 43	45
43.01 - 47	55
47.01 - 51.7	51
51.71 - 56.2	56
56.21 - 65	66
65 - 79.99	75
80 - 111.99	83
112 - 147.99	87
148 - 183.99	86

Conversion adapter

Adapter for external thread - internal thread conversion

An adapter to connect with a smaller tube diameter is also available upon request.

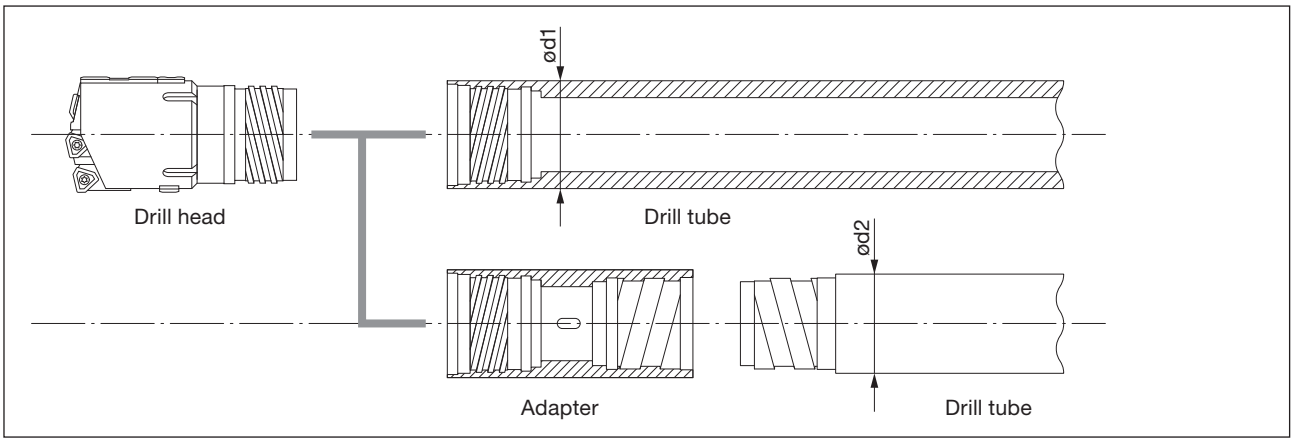

ød1 : Outer diameter of the tube that is applicable for the drill head
ød2 : Outer diameter of the tube that is connected with the adapter

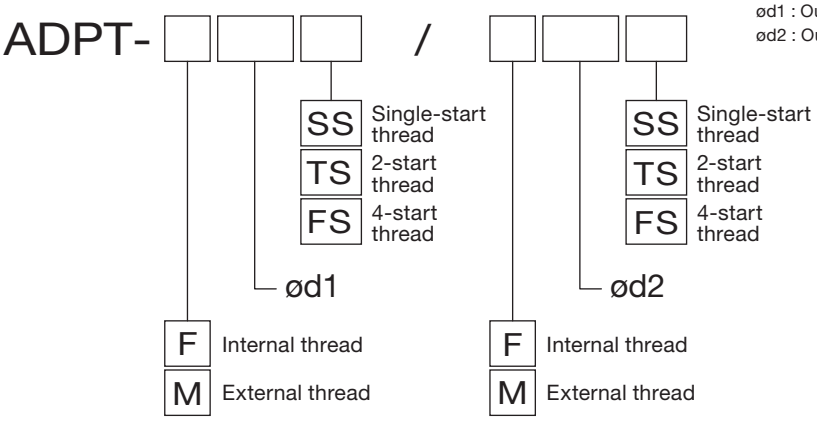

Designation example

For the conversion from ST11 to UB47

ADPT-F47FS / F47SS

ST11 UB47

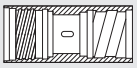

Surface Roughness

(According to JIS B 0601, 2001 and its explanation.)

Type	Symbol	How to determine	Example (Fig.)
Arithmetic mean roughness	***Ra***	*Ra* means the value obtained by the following formula and expressed in micrometer (μm) when sampling only the reference length from the roughness curve in the direction of mean line, taking X-axis in the direction of mean line and Y-axis in the direction of longitudinal magnification of this sampled part and the roughness curve is expressed by *y- f (x)*: $Ra=\frac{1}{\ell}\int_0^1 \lvert f(x) \rvert dx$ where, ℓ : reference length	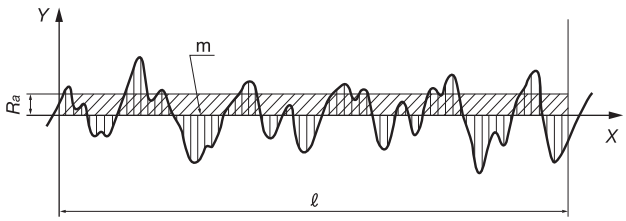
Maximum height	***Rz***	*Rz* shall be that only the reference length is sampled from the roughness curve in the direction of mean line, the distance between the top of profile peak line and the bottom of profile valley line on this sampled portion is measured in the longitudinal magnification direction of roughness curve and the obtained value is expressed in micrometer (μm). $Rz=Rp+Rv$	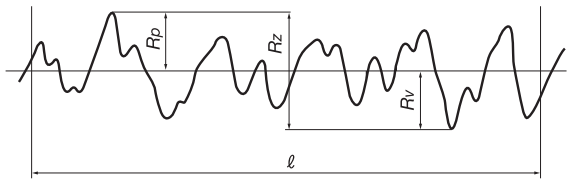
Ten point mean roughness	***RzJIS***	*RzJIS* shall be that only the reference length is sampled from the roughness curve in the direction of its mean line, the sum of the average value of absolute values of the heights of five highest profile peaks (*Zp*) and the depths of five deepest profile valleys (*Zv*) measured in the vertical magnification direction from the mean line of this sampled portion and this sum is expressed in micrometer (μm) $RzJIS=\frac{\lvert Zp1+Zp2+Zp3+Zp4+Zp5 \rvert+\lvert Zv1+Zv2+Zv3+Zv4+Zv5 \rvert}{5}$	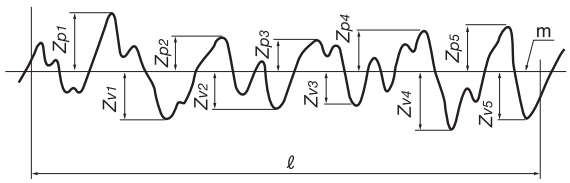 where, $Zp1, Zp2, Zp3, Zp4, Zp5$: altitudes of the heights of five highest profile peaks of the sampled portion corresponding to the reference length ℓ where, $Zv1, Zv2, Zv3, Zv4, Zv5$: altitudes of the depths of five deepest profile valleys of the sampled portion corresponding to the reference length ℓ

International Tolerance

IT (International Tolerance) Grades

IT grades shows a tolerance allowable for difference of the diameters of a hole and a shaft. As the number added after IT increases, the tolerance becomes rough. Depending on the basic size, the tolerance value in each grade varies.
In the catalog, IT grades are shown as a guide of dimensional dispersion in the diameters of holes machined with the drill. For information, H8 tolerance for a ø8.0 hole is 0 to + 0.022 mm, the width of the value is the same as that of IT 8.
In the Table shown below, tolerance areas attainable with typical drilling tools are distinguished by using different colors. Solid drills are generally used for machining holes of IT 9 to 12. For machining a hole of better than IT 8, finishing process such as reaming is required. For a hole better than IT 5, high-precision finishing is required. Above description is based on machining of general steel. In practice, the IT grade attained with the tool varies widely depending on the hardness and the composition of the work material.

Basic size (mm)		International tolerance grade																	
		IT1	IT2	IT3	IT4	IT5	IT6	IT7	IT8	IT9	IT10	IT11	IT12	IT13	IT14	IT15	IT16	IT17	IT18
>	≤						(μm)									(mm)			
-	3	0.8	1.2	2	3	4	6	10	14	25	40	60	0.1	0.14	0.25	0.4	0.6	1	1.4
3	6	1	1.5	2.5	4	5	8	12	18	30	48	75	0.12	0.18	0.3	0.48	0.75	1.2	1.8
6	10	1	1.5	2.5	4	6	9	15	22	36	58	90	0.15	0.22	0.36	0.58	0.9	1.5	2.2
10	18	1.2	2	3	5	8	11	18	27	43	70	110	0.18	0.27	0.43	0.7	1.1	1.8	2.7
18	30	1.5	2.5	4	6	9	13	21	33	52	84	130	0.21	0.33	0.52	0.84	1.3	2.1	3.3
30	50	1.5	2.5	4	7	11	16	25	39	62	100	160	0.25	0.39	0.62	1	1.6	2.5	3.9
50	80	2	3	5	8	13	19	30	46	74	120	190	0.3	0.46	0.74	1.2	1.9	3	4.6
80	120	2.5	4	6	10	15	22	35	54	87	140	220	0.35	0.54	0.87	1.4	2.2	3.5	5.4
120	180	3.5	5	8	12	18	25	40	63	100	160	250	0.4	0.63	1	1.6	2.5	4	6.3
180	250	4.5	7	10	14	20	29	46	72	115	185	290	0.46	0.72	1.15	1.85	2.9	4.6	7.2
250	315	6	8	12	16	23	32	52	81	130	210	320	0.52	0.81	1.3	2.1	3.2	5.2	8.1
315	400	7	9	13	18	25	36	57	89	140	230	360	0.57	0.89	1.4	2.3	3.6	5.7	8.9
400	500	8	10	15	20	27	40	63	97	155	250	400	0.63	0.97	1.55	2.5	4	6.3	9.7
500	630	9	11	16	22	32	44	70	110	175	280	440	0.7	1.1	1.75	2.8	4.4	7	11
630	800	10	13	18	25	36	50	80	125	200	320	500	0.8	1.25	2	3.2	5	8	12.5
800	1000	11	15	21	28	40	56	90	140	230	360	560	0.9	1.4	2.3	3.6	5.6	9	14
1000	1250	13	18	24	33	47	66	105	165	260	420	660	1.05	1.65	2.6	4.2	6.6	10.5	16.5
1250	1600	15	21	29	39	55	73	125	195	310	500	780	1.25	1.95	3.1	5	7.8	12.5	19.5
1600	2000	18	25	35	46	65	92	150	230	370	600	920	1.5	2.3	3.7	6	9.2	15	23
2000	2500	22	30	41	55	78	110	175	280	440	700	1100	1.75	2.8	4.4	7	11	17.5	28
2500	3150	26	36	50	68	96	135	210	330	540	860	1350	2.1	3.3	5.4	8.6	13.5	21	33

Tolerance area requiring finishing process such as with a reamer.

Tolerance area attainable with a solid drill.

Tolerance area attainable with an indexable drill.

Calculation formulas

Cutting speed

Tool rotating system

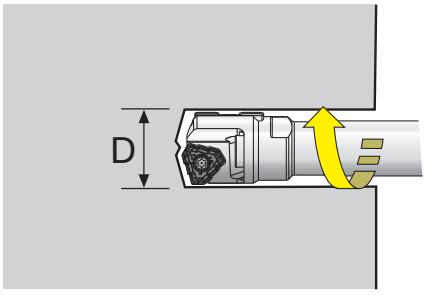

When calculating cutting speed from number of revolutions: (Drilling formulas)

$$v_c = \frac{\pi \times D \times n}{1000} \quad \text{(m/min)}$$

v_c : Cutting speed (m/min)
D : Drill diameter (mm)
n : Number of revolutions (min^{-1})
$\pi \approx 3.14$

When calculating required number of revolutions from cutting speed: (Drilling formulas)

$$n = \frac{1000 \times v_c}{\pi \times D} \quad (min^{-1})$$

Workpiece rotating system

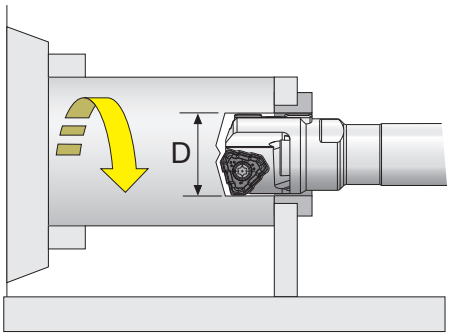

When calculating cutting speed from number of revolutions: (Where the workpiece rotates.)

$$v_c = \frac{\pi \times D \times n}{1000} \quad \text{(m/min)}$$

v_c : Cutting speed (m/min)
D : Drilling diameter (mm)
n : Number of revolutions (min^{-1})
$\pi \approx 3.14$

When calculating required number of revolutions from cutting speed: (Where the workpiece rotates.)

$$n = \frac{1000 \times v_c}{\pi \times D} \quad (min^{-1})$$

Calculation of feed speed

$$v_f = f \times n \quad \text{(mm/min)}$$

v_f : Feed speed (mm/min)
f : Feed (mm/rev)
n : Number of revolutions (min^{-1})

Replacing guide pads

Guide pads are subject to wear, like inserts

- The guide pad can be used on two end faces.
- When the first face wears up to 70% of its width, reverse the guide pad to use the second face.
- Replace with a new guide pad when the second face wears out.

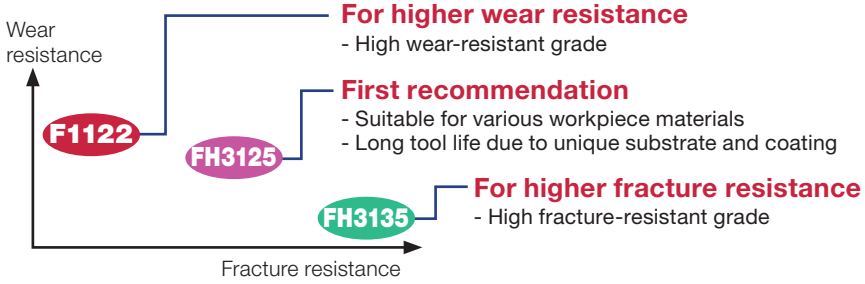

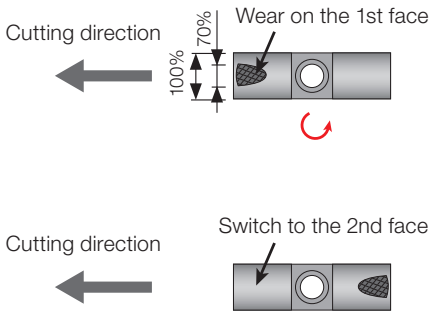

Mounting a drill head

Please be sure to use a wrench for a drill head to be clamped firmly.

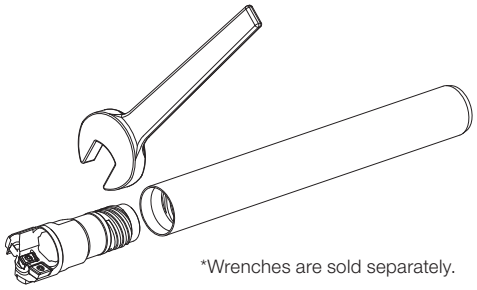

*Wrenches are sold separately.

When to replace the filler with a guide pad and protector

Replace the filler with a guide pad and protector when following is required:

- Higher hole precision
- Deep holes with an L/D ratio of over 50:1
- Drilling parts with a center hole
- A large stock removal that exceeds the marginal DOC* of the peripheral edge as specified in the list below.

*Maximum DOC of peripheral insert

Cartridge	DOC (mm)	Guide pad
OZ402-04	6.4	GP08.../GP10...
OZ402-32	7.2	GP10.../GP14...
OZ402-43	10.4	GP14.../GP18...
OZ402-63	12.0	GP18...

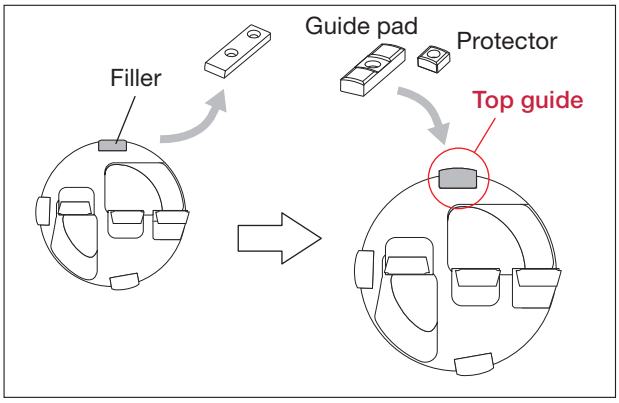

There is no pocket for the top guide pad furnished on the drill heads in diameters smaller than 92 mm.
Please contact your dealer for further information.

STS and DTS

Workpiece rotating system

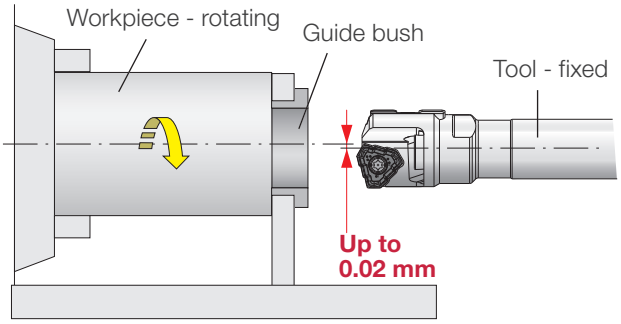

- Only used when the workpiece and the tool axis are on the same line.
- Better hole straightness and wear resistance on guide bush are provided compared to the tool-rotating system.
- Keep the alignment between guide bush and spindle within 0.02 mm.

Tool rotating system

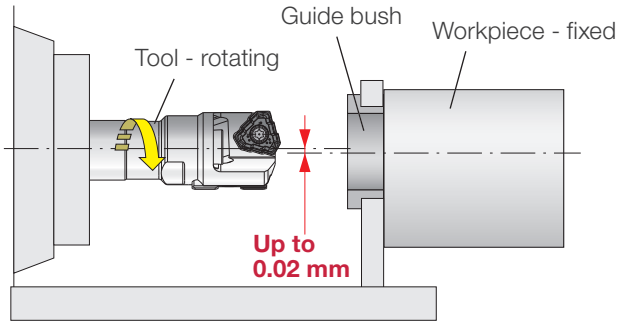

- Can be used when the workpiece and the tool axis are not on the same line.
- Keep the alignment between guide bush and spindle within 0.02 mm.

DTS

Positioning of outer tube and guide bush

Be sure to set the outer tube more than 5.0 mm into the guide bush to properly supply the coolant.

Positioning of workpiece material and guide bush

Sealing is not required for DTS because of the vacuum effect, but keep the gap between workpiece material and guide bush within 1.0 mm.

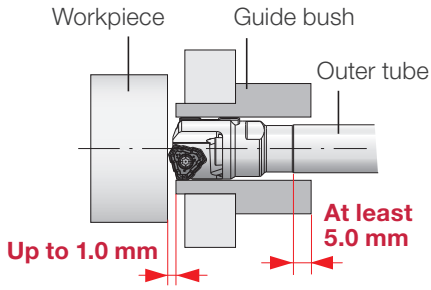

Guide bush

Tolerance

Guide bush tolerance should be G6 in order to keep consistent tool life and cutting accuracy. Diameters for G6 tolerance are shown on the right.

øD (mm)	G6 tolerance (mm)
8.00 - 10.00	+0.005 - +0.014
10.01 - 18.00	+0.006 - +0.017
18.01 - 30.00	+0.007 - +0.020
30.01 - 50.00	+0.009 - +0.025
50.01 - 80.00	+0.010 - +0.029
80.01 - 120.00	+0.012 - +0.034
120.01 - 180.00	+0.014 - +0.039
180.01 - 245.99	+0.015 - +0.044

Material

Guide bush material	System	Advantage
Hardened steel	Workpiece rotating	Cost efficient (inexpensive)
Tungsten carbide	Tool rotating Workpiece rotating	Long life of guide bush

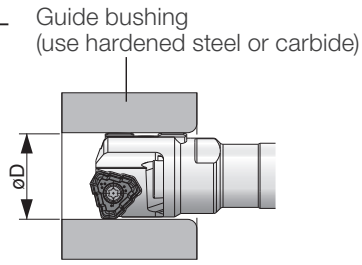

Coolant

Temperature

The proper coolant temperature is 30 - 40°C (90 - 100°F).
If the temperature exceeds this range, the coolant will deteriorate easily and may shorten tool life and generate poor surface finish.

Filtration

The coolant must be filtered properly in order to protect guide pads and workpiece surface.

Water-soluble type

Around 10% (dilution rate 1/10) is recommended for the concentration of water-soluble coolant in order to protect guide pads.

Coolant

Successful deep hole drilling is achieved by an optimal combination of the tool, the machine and the coolant. Coolant plays an essential role in achieving secure and cost-efficient deep hole drilling operations. Therefore, it is very important to choose the correct type of coolant and use it appropriately.

Coolant

Coolant plays an essential role in lubricating tools, cooling cutting edges, chips and guide pads, as well as evacuating chips when drilling. It also improves tool life, surface finish and cutting accuracy when continuously supplied during the machining process.

1) Lubrication

Lubrication of cutting edges and guide pads is necessary in deep hole drilling. For efficient lubrication, it is recommended to use EP (Extreme Pressure) additives which contain sulfur or chlorine.

2) Temperature reduction

The ability to cool down the cutting edge and chips depends on such characteristics as thermal conductivity and relative heat. Coolant with good cooling ability increases tool life, but water-soluble coolant is not preferred in deep hole drilling because it reduces effectiveness. If water-soluble coolant is used, the recommended concentration is 10% (dilution rate 1/10) or more.

3) Chip evacuation

Coolant helps push chips through the back end of the boring bar (for STS) or inner tube (for DTS) until the chips are separated from the workpiece in general cutting conditions. The flow and the pressure of coolant are also important in order to control chip evacuation.

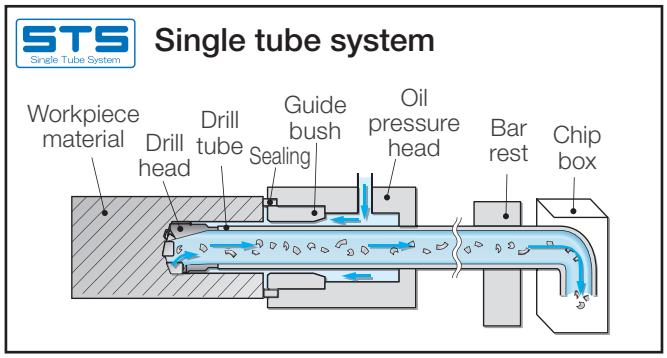

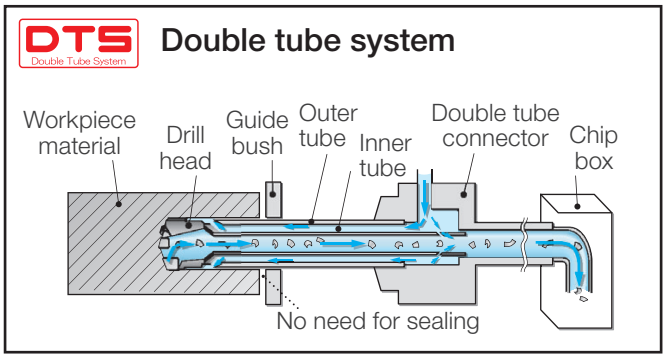

Coolant unit

A coolant unit is also important to obtain the best effect from the coolant.

1) Coolant pressure and volume should be fixed and continuous.

An ideal coolant unit is the one which can set any valve of coolant pressure and volume and monitor the condition with gauges. A system that can detect trapped chips by a pressure gauge and the screw pumps with an inverter controller are both recommended.

2) Coolant temperature should be maintained.

Coolant is heated by factors, such as:
- Cutting edge
- Friction on guide pad
- Contact time of heated chips and coolant
- Pump

Maintaining coolant temperature is important to keeping stable cutting conditions, chip formation and cutting accuracy. The temperature should be lower than 40°C (100°F) for EP additives to provide sufficient lubrication. Therefore, the coolant temperature should be kept between 30 - 40°C (90 - 100°F) throughout the cutting operation.

3) Filtering

Unwanted particles are contained in coolant after the cutting operations, thus filtration is necessary to remove them. The filter size should be selected carefully to catch particles but not EP additives. Filter size depends on the coolant, but around 10 - 20 µm is generally suggested. For iron-based workpieces, a magnetic separator is helpful as it decreases the frequency of filter maintenance.

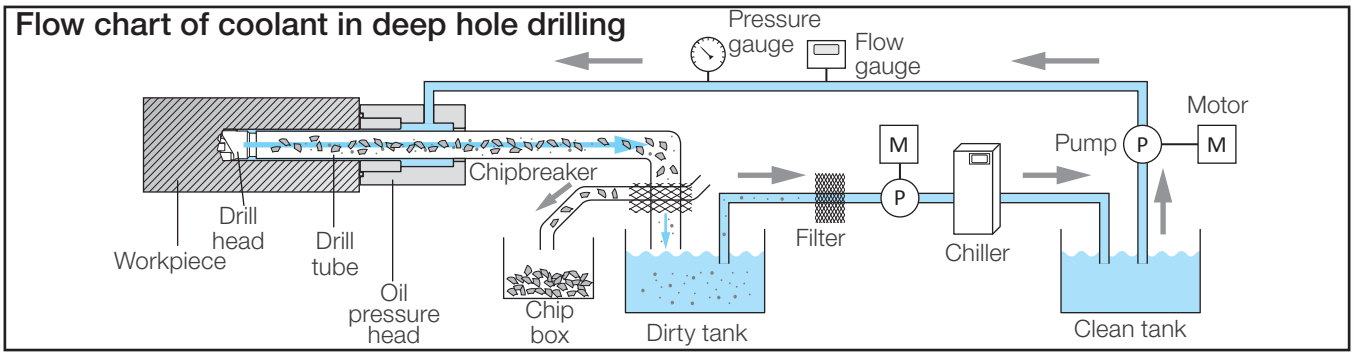

CNC drilling cycle operations

Use the CNC drilling cycle as instructed below in order to optimize the tool performance safely.

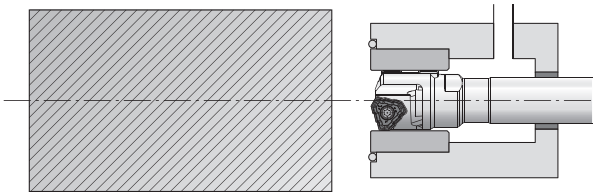

1. Start the CNC cycle operation

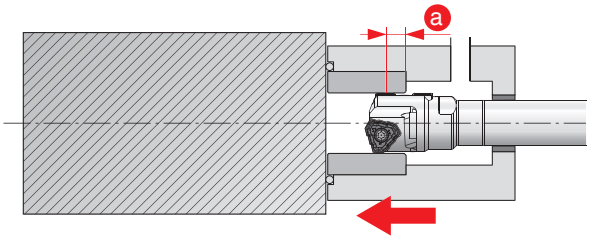

2. Move the oil pressure head and securely seal onto the face of the workpiece.

a Make sure to position the drill so that the guide pads remain inside the guide bushing when the pressure head is moved towards the workpiece face.

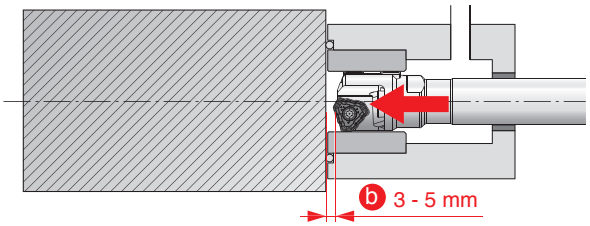

3. Move the BTA drill toward the workpiece

b Keep the drill 3 - 5 mm* off the face of the workpiece.

* If the machine allows this drill setting in Step 1, move on to Step 4.

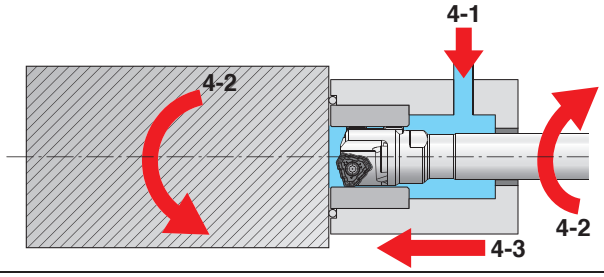

4. Start the cutting

4-1 Activate the coolant supply.

4-2 Start the rotation (of the drill, the workpiece, or the drill+workpiece).

4-3 Start the drill feed.

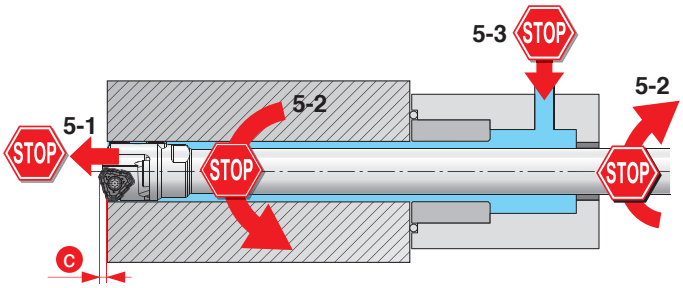

5. Stop the cutting

5-1 Stop the drill feed.

5-2 Stop the rotation.

5-3 Stop the coolant supply.

c Stop the cutting when the drill shoulder is completely through the end face of the workpiece.

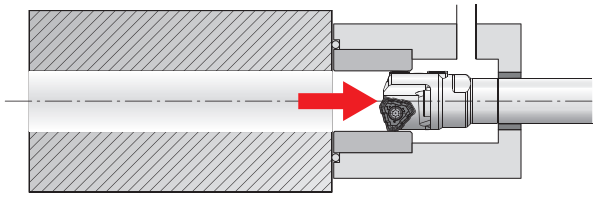

6. Return the drill to the starting point

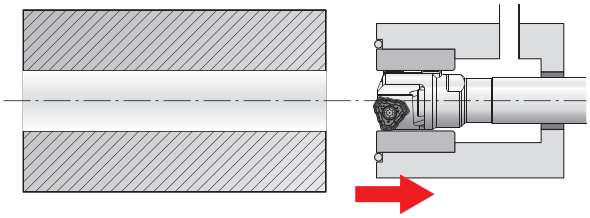

7. Return the oil pressure head to the starting point

Troubleshooting for insert damages

Examples of trouble with cutting edge

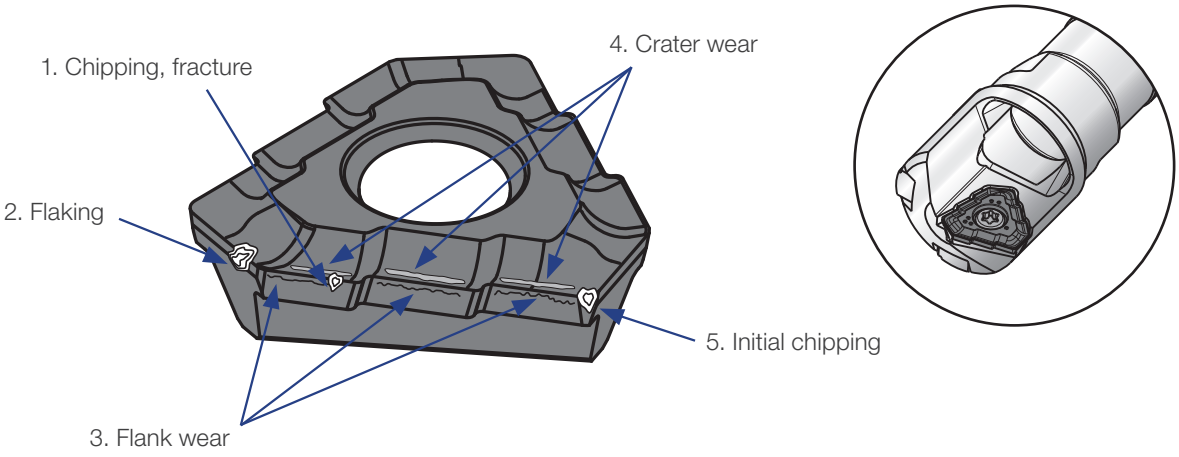

Problem	Cause	Solution	
		Grade	Cutting conditions / other
1. Chipping, fracture	- Excessive vibration or impact - Torn away built-up edge	- Use a tough grade	- Reduce the feed rate - Eliminate the vibration
2. Flaking	- Excessive vibration or impact	- Use a tough grade	- Reduce the feed rate - Eliminate the vibration
3. Flank wear	- Cutting speed too high - Inadequate tool toughness	- Use a grade with high wear resistance - Use a coated grade	- Reduce the cutting speed - Reduce the feed rate - Use coolant properly
4. Crater wear	- Cutting speed too high - Feed rate too high - Inadequate tool toughness	- Use a grade with high wear resistance - Use a coated grade	- Reduce the cutting speed - Reduce the feed rate - Use coolant properly
5. Initial chipping	- Inappropriate guide bush or pilot hole - Misalignment	- Use a tough grade	- Adjust or change the guide bushing or pilot hole - Reduce the feed rate - Correct the misalignment

Cutting condition and chip form

Chip form in deep hole drilling

Chip form plays a key role in STS (Single tube system) and DTS (Double tube system) while large-volume and high-pressure coolant do so as well. Because chips are removed through the tube with coolant, proper chip formation is essential for smooth and steady evacuation.

Chip size optimization

Generally, chip length should be 3 - 4 times its width, but tends to be longer with difficult-to-cut materials. In that case, chip evacuation will be improved by making chips thinner, usually by reducing the feed rate.
Chip form variations according to different cutting speeds and feed rates are shown in **Table 1** below. To shorten chip sizes, either decrease the cutting speed or increase the feed rate.

Chip formation

Chip formation is affected by multiple factors, such as workpiece material, chipbreaker geometry, cutting speed, feed, type of coolant and coolant temperature. Suitable chip formation depends on cutting operation but is controllable by changing the cutting conditions.

Table 1

Cutting speed: *Vc* (m/min)	0.10	0.15	0.20
110	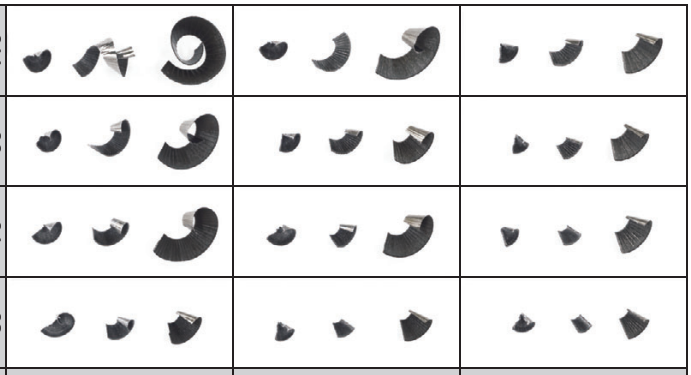		
90			
70			
50			
Condition	Feed: *f* (mm/rev)		

Workpiece material: Low alloy steel (AISI4340)

MEMO

MEMO

BTA

UNITAC

Member IMC Group

3-7-57 Miyanojin, Kurume
Fukuoka 839-0801
www.unitacinc.com

E-Catalog is available

UNITAC E-Catalog
Online catalog is from here

AS9100 Certified
78006
2015.11.04

ISO 14001 Certified
EC97J1123
1997.11.26

DISTRIBUTED BY:

Nov. 2023